JERR-DAN

Operation And Safety Manual

Original Instructions

Keep this manual with machine at all times.

HPL SERIES LIGHT DUTY WRECKER

SN 0230009688 to Present

5376000248

April 1, 2022

JERR-DAN

An Oshkosh Corporation Company

⚠ WARNING

Operating, servicing and maintaining this vehicle or equipment can expose you to chemicals including engine exhaust, carbon monoxide, phthalates, and lead, which are known to the State of California to cause cancer and birth defects or other reproductive harm. To minimize exposure, avoid breathing exhaust, do not idle the engine except as necessary, service your vehicle or equipment in a well-ventilated area and wear gloves or wash your hands frequently when servicing. For more information go to www.P65Warnings.ca.gov.

REVISION LOG

April 1, 2022 - A - Original Issue of Manual.

Read This First

This manual provides Operational and Safety information for the Light Duty HPL Wrecker. Read this manual and the Operation and Safety Manual provided with other equipment thoroughly prior to starting operation.

This manual is a very important tool! Keep it with the machine at all times.

The purpose of this manual is to provide owners, users, and operators with the precautions and operating procedures essential for the safe and proper machine operation for its intended purpose.

Due to continuous product improvements, Jerr-Dan Corporation reserves the right to make specification changes without prior notification. Contact Jerr-Dan Corporation for updated information.

OPERATOR QUALIFICATIONS

The operator of the machine must not operate the machine until this manual has been read, training is accomplished and operation of the machine has been completed under the supervision of an experienced and qualified operator.

Operators of this equipment must possess a valid, applicable driver's license, be in good physical and mental condition, have normal reflexes and reaction time, good vision and depth perception and normal hearing. Operator must not be using medication which could impair abilities nor be under the influence of alcohol or any other intoxicant during the work shift.

In addition, the operator must read, understand and comply with instructions contained in the following material furnished with the equipment:

- This Operation & Safety Manual
- All instructional decals and plates
- Any optional equipment instructions furnished
- Commercial vehicle's Operation & Maintenance Manuals

The operator must also read, understand and comply with all applicable Employer, Industry and Governmental rules, standards and regulations.

MODIFICATIONS

Any modification to this machine must be approved by Jerr-Dan.

HAZARD CLASSFICATION SYSTEM

SAFETY ALERT SYSTEM AND SAFETY SIGNAL WORDS

This is the Safety Alert Symbol. It is used to alert to the potential personal injury hazards. Obey all safety messages that follow this symbol to avoid possible injury or death.

DANGER

Indicates an imminently hazardous situation. If not avoided, will result in serious injury or death. This decal will have a red background.

WARNING

Indicates a potentially hazardous situation. If not avoided, could result in serious injury or death. This decal will have an orange background.

CAUTION

Indicates a potentially hazardous situation. If not avoided, *may* result in minor or moderate injury. It may also alert against unsafe practices. This decal will have a yellow background.

NOTICE

Indicates information or a comply policy that relates directly or indirectly to the safety of the personnel or protection of property.

WARNING

This product must comply with all safety related bulletins. Contact Jerr-Dan Corporation or the local authorized representative for information regarding safety bulletins which may have been issued for this product.

NOTICE

Jerr-Dan Corporation sends safety related bulletins to the owner of record of this machine. Contact Jerr-Dan Corporation to ensure that the current owner of records are updated and accurate.

NOTICE

Jerr-Dan Corporation must be notified immediately in all instances where Jerr-Dan product have been involved in an accident involving bodily injury or death of personnel or when substantial damage has occurred to personal property on the Jerr-Dan product.

FOR:

- Accident Reporting and Product Safety Publications
- Current Owner Updates
- Questions Regarding Product Applications and Safety
- Standards and Regulations Compliance Information
- Questions Regarding Product Modifications

CONTACT:

Product Safety and Reliability Department
Jerr-Dan Corporation
13224 Fountainhead Plaza
Hagerstown, MD 21742
USA

or Your Local Jerr-Dan Office

In USA
Toll Free: 1-877-554-7233

Outside USA
Phone: 240-420-2661
Fax: 301-745-3713

E-mail
ProductSafety@JerrDan.com

REPORTING SAFETY DEFECTS

If you believe that your vehicle has a defect which could cause a crash or could cause injury or death, you should immediately inform the National Highway Traffic Safety Administration (NHTSA) in addition to notifying Jerr-Dan Corporation.

If NHTSA receives similar complaints, it opens an investigation, and if it finds that a safety defect exists in a group of vehicles, it may order a recall and remedy campaign. However, NHTSA cannot become involved in individual problems between you, your dealer, or Jerr-Dan Corporation.

To contact NHTSA, you may call the Vehicle Safety Hotline toll-free at 1-888-327-4236 (TTY: 1-800-424-9153); go to https://www.nhtsa.gov/about-nhtsa/contact-us; or write to:

Administrator
NHTSA
1200 New Jersey Avenue SE.
West Building
Washington, DC 20590

You can also obtain other information about motor vehicle safety from https://www.nhtsa.gov/campaign/safercargov?redirect-safercar-sitewide.

THIS PAGE IS INTENTIONALLY LEFT BLANK

TABLE OF CONTENTS

Revision Log

Read This First

Operator Qualifications....b
Modifications....b
Hazard Classfication System....c
Safety Alert System and Safety Signal Words....c
Reporting Safety Defects....e

Table of Contents

Section 1 - General Safety Practices

1.1 General....1-1
1.2 Pre-Operation....1-2
Operator Training and Knowledge....1-2
Electrical Hazards....1-2
Crush and Collision Hazards....1-4
Winch Cable / Falling Load Hazards....1-5
Uncontrolled Towed Load Hazards....1-6
Tip-Over Hazards....1-7
Fall Hazards....1-7
Chemical Hazards....1-8
Battery Hazards....1-9
Personal Protective Equipment....1-9
Weather Conditions....1-10
Vehicle Equipment Damage....1-10

Section 2 - Pre-Operation And Inspection

2.1 Pre-Operation Check and Inspection....2-1
2.2 Decals....2-2
2.3 Walk-Around Inspection....2-4
2.4 Operational Checks....2-8
Operational Check....2-8

Section 3 - Controls & Indicators

3.1 General....3-1
3.2 In-Body Controls....3-2
3.3 6 Function Wired Hand Controller (If Equipped)....3-3

Section 4 - Operation

4.1 Underlift Operation - Manual Grids....4-2
4.2 Tie-Down Straps - Manual Grid....4-8
4.3 Underlift Operation - Pivoting Grids....4-10
4.4 Tie-Down Straps - Pivoting Grid....4-17
4.5 Frame Fork Lift Attachment Package....4-19
4.6 Recovery Winch Operation (Optional)....4-21
4.7 Wrecker Boom Operation - Single Line Boom (Optional)....4-24
4.8 Wrecker Boom Operation - Dual Line Boom (Optional)....4-27
4.9 Tow Sling Operation (Optional)....4-30

4.10 Towing Ball (Optional) 4-33

Section 5 - Emergency Procedures

5.1 Lowering of the Wrecker Boom 5-1
5.2 Raising/Lowering/Retracting/Tilting the Underlift Boom 5-2

Section 6 - Maintenance

6.1 Introduction 6-1
6.2 Maintenance And Lubrication 6-2
6.3 Oils And Greases 6-3
6.4 Wire Rope Handling And Inspection 6-5
6.5 Wire Rope Installation 6-7
6.6 Lubrication Charts 6-10
Lubrication Points 6-14
6.7 Trouble Shooting 6-16
Hydraulic System 6-16
P.T.O. Functioning Improperly 6-17
Hydraulic Pump 6-17
Hydraulic Pump 6-18
Winch Functioning Improperly 6-18
Remote Hand Controller 6-19

Section 7 - Specifications

7.1 Product Specifications 7-1
HPL-35 7-1
HPL-60 7-5
Truck Chassis 7-9
7.2 Capacities 7-10

Inspection, Maintenance and Repair Log

Transfer Of Ownership

SECTION 1 - GENERAL SAFETY PRACTICES

1.1 GENERAL

This section outlines the necessary precautions for proper and safe machine operation and maintenance. For proper machine use, it is mandatory that a daily routine is established based on the content of this manual. A maintenance program, using the information provided in this manual must also be established by a qualified person and followed to ensure the machine is safe to operate.

The owner/user/operator of the machine must not operate the machine until this manual has been read, training is accomplished, and operation of the machine has been completed under the supervision of an experienced and qualified operator.

There may be times your truck my be exposed to direct contact with the public such as parades, charitable fundraisers, etc. Before allowing anyone other than a trained and experienced employee of your company near your truck, you should consult with your company safety officer and plan for safety.

If there are any question with regard to safety, training, inspection, maintenance, application, and operation, please contact Jerr-Dan Corporation.

⚠ WARNING

Failure to comply with the safety precautions listed in this manual could result in machine damage, property damage, personal injury or death.

1.2 PRE-OPERATION

OPERATOR TRAINING AND KNOWLEDGE

- Read and understand this manual before operating the machine.

- Do not operate this machine until complete training is performed by authorized persons.
- Only authorized and qualified personnel can operate the machine.
- Read, understand, and obey all DANGERS, WARNINGS, CAUTIONS, and operating instructions on the machine and in the manual.
- Use the machine in a manner which is within the scope of its intended application set by Jerr-Dan.
- All operating personnel must be familiar with the emergency operation of the machine as specified in this manual.
- Read, understand, and obey all applicable employer, local, and government regulations as the pertain to the operation of the machine.

ELECTRICAL HAZARDS

- This machine is not insulated and does not provide protection from contact or being near electrical current. This includes lightning and lightning strikes.
- NEVER operate the machine in an area where overhead power lines, overhead or underground cables, or other power sources may exist without ensuring the appropriate power utility company de-energizes the lines.

- Always check for power lines before raising the boom.

- Look up and use light to search for power lines in the dark.
- Allow for machine movement and electrical line swaying.
- Do not step off or touch a charged vehicle.
- Maintain a clearance of at least 10 ft. (3m) between any part of the machine from any electrical line or apparatus carrying up to 50,000 volts. Refer to the Minimum Approach Distance (MAD) chart. One foot additional clearance is required for every additional 30,000 volts or less.

Minimum Approach Distance (M.A.D.)

Voltage Range (Phases to Phase)	MINIMUM APPROACH DISTANCE in Feet (Meters)
0 to 50KV	10 (3)
Over 50KV to 200KV	15 (5)
Over 200KV to 350KV	20 (6)
Over 350KV to 500KV	25 (8)
Over 500KV to 750KV	35 (11)
Over 750KV to 1000KV	45 (14)
NOTE: This requirement shall apply except where employer, local or government regulations are more stringent.	

- The minimum approach distance may be reduced if insulating barriers are installed to prevent contact, and the barriers are rated for the voltage of the line being guarded. These barriers shall not be part of (or attached to) the truck. The minimum approach distance shall be reduced to a distance within the designed working dimensions of the insulating barrier. This determination shall be made by a qualified person in accordance with the employer, local, or governmental requirements for work practices near energized equipment.

⚠ DANGER

DO NOT MANEUVER TRUCK OR PERSONNEL INSIDE PROHIBITED ZONE (MAD). ASSUME ALL ELECTRICAL PARTS AND WIRING ARE ENERGIZED UNLESS KNOWN OTHERWISE.

CRUSH AND COLLISION HAZARDS

- Keep clear of all spades.
- Always use jack stands to support the boom and/or underlift before working underneath a lifted load.
- Warn personnel not to work, stand, or walk under a raised boom or underlift. Position barricades if necessary.
- Lower boom to stowed position prior to driving machine.
- Be aware of height clearances when traveling.

- Look out for and avoid other personnel, machinery, vehicles and obstructions in the area when driving the truck. Use a spotter if you DO NOT have a clear view.

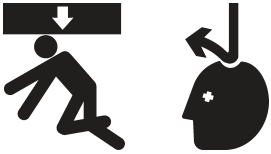

When opening body compartments:

- Loose items may shift during transport, ensure to properly secure items when not in use
- Ensure all compartment doors are properly closed proir to transport.

WINCH CABLE / FALLING LOAD HAZARDS

- Keep people away during operation.
- Never exceed capacity of rigging or cable.
- Never stand on or straddle cable.
- Always keep a minimum of five (5) wraps of cable on winch drum.
- Keep tension on cable when unwinding.

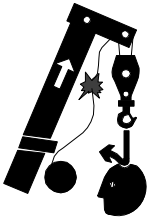

- Always stop operation before block contacts sheave.
- If block contacts sheave, lower load by letting out cable and inspect for damage.
- Keep cables from contacting sharp objects.
- Never wrap cables around objects. Use appropriate chains/straps to wrap around the vehicle to be recovered, and attach the cable hook to the chain/straps.
- Never allow the cable to cross over itself when wrapping on the drum.
- All boom placement functions should be made with the winch wire ropes set in “free spool” to avoid over tensioning or breaking the winch wire ropes.
- Never use damaged cable. Never use cable menders. Replace damaged cable. Use cable and hooks with equal or greater rating.

- Keep hands away from cable and drum during operation.

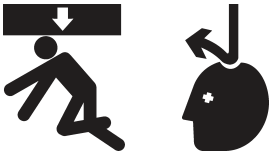

- Never operate recovery equipment with people under load.
- Jog winch clutch before pulling. Keep winch clutch engaged while the cable is loaded.
- Approved head gear must be worn during recovery operations.

UNCONTROLLED TOWED LOAD HAZARDS

- DO NOT exceed GAWR's or GCWR of the chassis.
- Set parking brake and chock wheels of the recovery vehicle when **connecting** casualty vehicle.
- Use two (2) safety chains and two (2) tie-down chains or straps.
- Release parking brake of casualty vehicle prior to moving.
- Check chain tension periodically while in transit.
- Always retract underlift as close as possible. Leave enough room to maneuver around corners without corner binding or causing contact between the two (2) vehicles.
- Ensure safety chains are properly attached from recovery vehicle to casualty vehicle.
- Attach auxiliary D.O.T. towing lights to the casualty vehicle.

- If towing a vehicle from the rear, ensure vehicle steering wheel is properly locked.
- Tow casualty vehicle on undamaged wheels/tires only.
- Retighten the tie-down straps during a tow as the tires settle into the grid from towing.

TIP-OVER HAZARDS

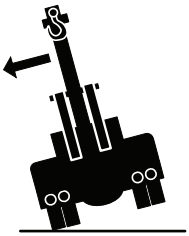

- Set up on firm surface only.
- Deploy rear spades onto proper firm surface.
- Ensure truck is level prior to any boom operations.

FALL HAZARDS

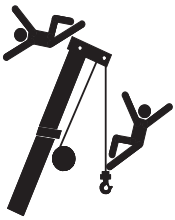

- Never use wrecker boom to hoist personnel.
- Never ride on boom, hook, load or any other device attached to wrecker boom or load line.
- DO NOT carry riders outside the cab. Riders could fall off the machine.
- Do not climb on the truck to access elevated service points. Only use approved ladders or grab handles and steps provided on the rear of the unit when accessing the service points on the top of the truck body in a controlled service environment. Always maintain 3-point contact, using two hands and one foot or two feet and one hand, when mounting or dismounting. These surfaces can become slippery, ensure to keep them and footwear clean and free of debris.

CHEMICAL HAZARDS

Exhaust Fumes

- DO NOT operate machine in an enclosed area without proper ventilation.
- DO NOT operate the machine in hazardous environments unless approved for that purpose by Jerr-Dan and site owner. Sparks from the electrical system and the engine exhaust can cause an explosion.

Flammable Fuel

- DO NOT fill the fuel tank or service the fuel system near an open flame, sparks or smoking materials. Engine fuel is flammable and can cause a fire and/or explosion.

Hydraulic Fluid

- DO NOT attempt to repair or tighten any hydraulic hoses or fittings while the engine is running or when the hydraulic system is under pressure.
- Stop engine and relieve trapped pressure. Fluid in the hydraulic system is under pressure and can penetrate the skin.
- DO NOT use your hand to check for leaks. Use a piece of cardboard or paper to search for leaks. Wear gloves to protect hands from spraying fluid.

BATTERY HAZARDS

- Battery fluid is highly corrosive. Avoid contact with skin and clothing at all times.
- Keep sparks, flames, and lighted materials away from batteries.
- Charge batteries only in a well ventilated area.
- Wear proper eye protection when servicing battery.

PERSONAL PROTECTIVE EQUIPMENT

- Use personal protective equipment when working on or around this vehicle.
- Remove rings, watches, jewellery, neckwear or other items that can catch in equipment.
- Wear :
  - o Snug fitting and sturdy long-sleeve shirt and long pants. Avoid loose fitting clothes.
  - o Sturdy gloves.
  - o Approved eye protection.
  - o Steel toed boots.
  - o Approved head gear.
  - o Approved hearing protection.

WEATHER CONDITIONS

- Be aware of the wind conditions. Wind may cause load to swing or shifting of load.
- If using in freezing conditions, you must be alert to possibility of ice forming on the device. Use Caution when extending and retracting winch cables, boom, and underlift. In addition use caution when opening/closing body panels
- Hydraulic cylinders are subject to thermal expansion and contraction. This may result in changes to the boom and/or attachment position while the machine is stationary. Factors affecting thermal movement can include the length of time the machine is stationary, hydraulic oil temperature, ambient air temperature and boom and/or attachment.

VEHICLE EQUIPMENT DAMAGE

The act of lifting and towing casualty vehicles that have often been involved in a crash offers many opportunities to inflict worse damage on the towed vehicle, or even damage to the recovery vehicle. Recovery operators should take great care to avoid this damage. Follow these guidelines to reduce the potential for equipment damage.

- Ensure vehicle is positioned in an area free from overhead obstructions. Keep a safe working distance from overhead power lines, bridges, road signs and other objects.
- Avoid retracting or extending the wrecker boom while under load.
- Do not tow a vehicle on its drive wheels unless steps have been taken to protect its transmission and differential. Follow the recommendations of the vehicle manufacturer or use a towing dolly.
- Never attach the chain hooks in such a way as to damage brake lines or other functional parts.
- Ensure proper ground clearance of the underlift boom when traveling. Keep the underlift boom raised high enough off the ground when roading to avoid dragging it over road surfaces.
- Do not move the recovery vehicle while rear spades are extended.
- Spades may damage paved surfaces.

- **Do not use machine as a ground when performing any welding operations.**
- Never tie-down the front of the recovery vehicle. This procedure may place excessive load on the chassis frame or other structural components leading to damage and costly repairs.
- Don't travel with the PTO engaged. Damage to the recovery vehicles transmission and hydraulic components will occur. Engage the PTO only when operating the hydraulic controls. Some PTO/Transission combinations allow for the PTO to be operated during travel. Consult your specific PTO Operators Manual.
- When using spades on pavement or concrete, it is suggested that you use larger rubber or wood pads under the spades to help distribute the heavy loads. Damage to the pavement or concrete may result.
- When using the tow sling be sure the chains and hooks are attached to frame members and not sheet metal.
- When using the tow sling never attach the chain hooks in such a way as to damage brake lines or other functional parts.
- When using the tow sling never make a front lift without unlatching the hood of the vehicle.
- Hook up tow sling and make the lift in strict accordance with AAA's instructions.

THIS PAGE IS INTENTIONALLY LEFT BLANK

SECTION 2 - PRE-OPERATION AND INSPECTION

2.1 PRE-OPERATION CHECK AND INSPECTION

Note: Complete all required maintenance before operating unit.

⚠ WARNING

FALL HAZARD. Use extreme caution when checking items beyond your normal reach. Use an approved ladder.

The pre-operation check and inspection, performed at beginning of each work shift or at each change of operator, should include the following:

1. **Cleanliness** - Check all surfaces for leakage (oil, fuel or battery fluid) or foreign objects. Report any leakage to the proper maintenance personnel.

2. **Structure** - Inspect the machine structure for dents, damage, weld or parent metal cracks or other discrepancies.

3. **Safety Decals Placards** - Ensure all safety decals are legible and in place. Clean or replace as required. See page 2-2 for details.

4. **Operation and Safety Manual(s)** - Operation & Safety Manual(s) are in cab.

5. **Walk-Around Inspection** - See page 2-4 for details.

6. **Fluid Levels** - Check fluids, including fuel, hydraulic oil, engine oil, transmission fluid and coolant. When adding fluids, refer to Section 6.2 - Lubrication and Maintenance and Section 7.1 - Specifications to determine proper type and intervals. Before removing filler caps or fill plugs, wipe all dirt and grease away from the ports. If dirt enters these ports, it can severely reduce component life.

7. **Attachments/Accessories** - Inspect all attachments for dents, damage, weld or parent metal cracks or other discrepancies. Inspect tie-down straps for cuts, frays or tears. Inspect chains for weld or parent metal cracks or other discrepancies.

8. **Operational Check** - Once the walk-around inspection is complete, perform a warm-up and operational check (see page 2-8) of all systems in an area free of overhead and ground level obstructions. See Section 3 - Controls & Indicators for more specific operating instructions.

⚠ WARNING

If your HPL does not operate properly, immediately bring machine to a stop, lower boom to ground and stop the engine. Determine cause and correct before continued use.

2.2 DECALS

Ensure all **DANGER**, **WARNING, CAUTION** and instructional decals and proper capacity charts are legible and in place. Clean and replace as required.

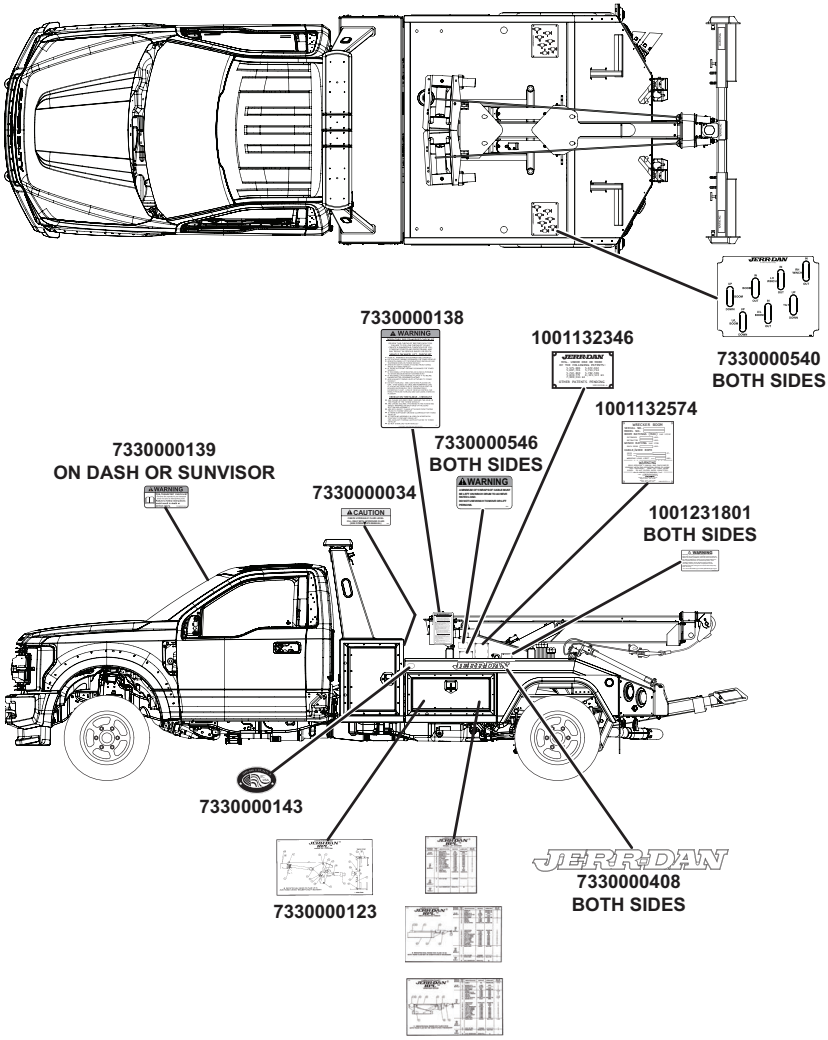

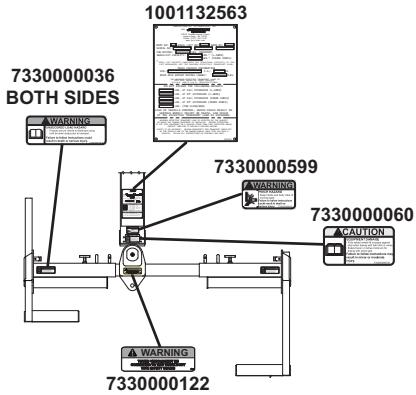

MANUAL “L-ARM” GRID OPTION

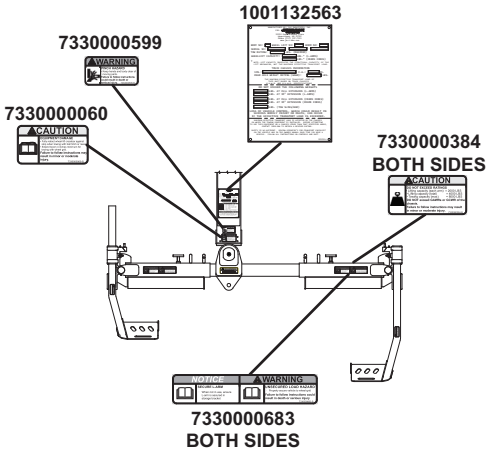

PIVOTING “T-37” GRID OPTION

2.3 WALK-AROUND INSPECTION

NOTE: *Complete all required maintenance before operating the unit.*

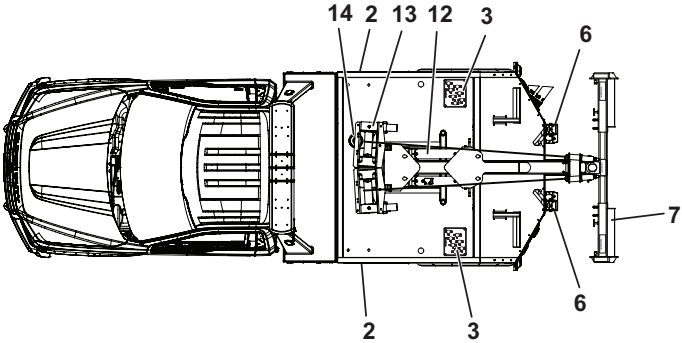

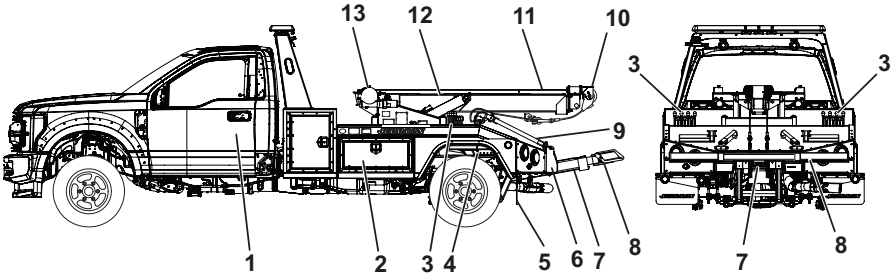

Begin your walk-around inspection at item 1, as noted below checking each item in sequence.

INSPECTION NOTE: On all components, make sure there are no loose or missing parts, that they are securely fastened and no visible leaks or excessive wear exists in addition to any other criteria mentioned. Inspect all structural members including attachment for cracks, excessive corrosion and other damage.

⚠ WARNING

FALL HAZARD. Use extreme caution when checking items beyond your normal reach. Use an approved ladder.

⚠ CAUTION

All products are subject to age, wear and deterioration, all of which cause a reduction in the products breaking strength capacity. It is recommended that all products be regularly inspected to follow component manufacturer's recommendations. Any worn, deformed, misused or overloaded products must be replaced immediately.

1. Remote Controller (If equipped)
    a. Secure
    b. Undamaged and operational
2. Toolbox/Storage Compartment
    a. Components undamaged
    b. Toolbox/Storage Compartment secure
3. Hydraulic Controls
    a. Components undamaged and operational
    b. Hydraulic hoses and electric harnesses undamaged
    c. Valve and hydraulic hoses not leaking
4. Subframe
    a. Secure
    b. Components undamaged
5. Mud Flaps
    a. Components undamaged
    b. Mud Flaps secure
    c. Mud Flaps present
6. Chain Storage Boxes and Safety Chains
    a. Chain Storage Boxes undamaged
    b. Safety Chains are present
    c. Safety Chains are undamaged
7. Underlift Boom
    a. Underlift boom pivot pins secure
    b. Cylinder pins secure
    c. Hydraulic hoses undamaged, not leaking
    d. Check wear pads for presence of grease

8. Wheellift/Crossbar
    a. Crossbar pivot pin, secure
    b. Crossbar pivot pin, presence of grease
    c. Cylinder pins secure (If Equipped)
    d. Components undamaged
    e. Pins undamaged
    f. Pressence of grease
9. Tow Sling (If equipped)
    a. Components undamaged and operational
    b. Secure
10. Winch Sheave(s) (If equipped)
    a. Check for presence of grease
    b. Pivot pin secure
11. Wire Rope(s) and Hook(s) (If equipped)
    a. Wire Rope, Undamaged
    b. Wire Rope, presence of grease
    c. Wire Rope Hooks, Undamaged
    d. Wire Rope Hook Latches, Undamaged and functional
12. Wrecker Boom
    a. Wrecker boom pivot pins secure
    b. Cylinder pins secure
    c. Hydraulic hoses undamaged, not leaking
    d. Check wear pads for presence of grease
13. Winch(s) (If Equipped)
    a. Hydraulic hoses undamaged, not leaking
    b. Gear oil level full

14. Hydraulic Tank

    a. Hydraulic fluid level full

    a. Components undamaged

    b. Hydraulic hoses undamaged, not leaking

2.4 OPERATIONAL CHECKS

OPERATIONAL CHECK

When engine warms, perform an operational check:

1. Parking brake operation.
2. Horn and back-up alarm. Must be audible from inside operators cab with engine running.
3. Electric controlled hydraulic functions (if equipped) - all functions operate smoothly and the controls return to the “Neutral Off” position.
4. Manually controlled hydraulic functions - all functions operate smoothly and the controls return to the “Neutral Off” position.
5. Hydraulic filter condition indicator.
6. Power-Take-Off operation.
7. Body lighting operation.
8. Emergency lighting operation.

SECTION 3 - CONTROLS & INDICATORS

3.1 GENERAL

This section provides the necessary information needed to understand the control functions.

The controls inside the vehicle cab control the emergency lights, auxiliary lights and the Power Take Off/Clutch Pump. The Power Take Off/Clutch Pump provides a transfer of power from the transmission to a hydraulic pump to provide hydraulic power to the wrecker hydraulics.

Your HPL is supplied with various control options. Controls are provided at the rear of the unit along with an optional wired hand controller. The wired hand controller should be found inside the cab of the vehicle.

Note: *The manufacturer has no direct control over machine application and operation. The user and operator are responsible for conforming with good safety practices.*

3.2 IN-BODY CONTROLS

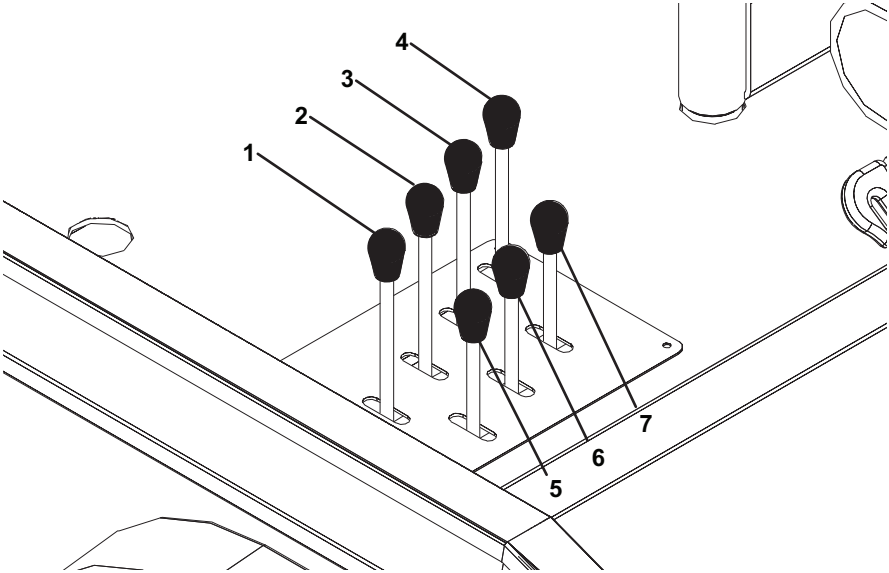

1. Boom - Raise/Lower	:	Controls the boom raise/lower functions.
2. Boom - Extend/Retract	:	Controls the boom extend/retract functions.
3. Left Hand (Single) Winch - In/Out (If Equipped)	:	Controls the wire rope winding/ unwinding function of the LH (Single) winch.
4. Right Hand Winch - In/Out (If Equipped)	:	Controls the wire rope winding/ unwinding function of the RH winch.
5. Underlift Boom - Raise/Lower	:	Controls the underlift boom raise/ lower functions
6. Underlift Boom - Extend/Retract	:	Controls the underlift boom extend/ retract functions.
7. Underlift Boom Tilt - Raise/Lower	:	Controls the underlift boom tilt raise/ lower functions.

3.3 6 FUNCTION WIRED HAND CONTROLLER (IF EQUIPPED)

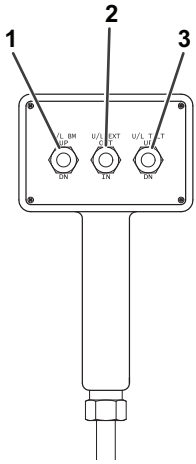

1. Underlift Boom - Raise/Lower : Controls the underlift boom raise/lower functions.
2. Underlift Boom - Extend/Retract : Controls the underlift boom extend/retract functions.
3. Underlift Boom Tilt - Raise/Lower : Controls the underlift boom tilt raise/lower functions.

THIS PAGE IS INTENTIONALLY LEFT BLANK

SECTION 4 - OPERATION

The standard operating controls for your HPL are conveniently located at the rear corners of the truck body. There is also an optional wired handheld remote controllers that controls the HPL functions.

⚠ WARNING

CRUSH HAZARD. Always operate the controls from the side away from traffic.

4.1 UNDERLIFT OPERATION - MANUAL GRIDS

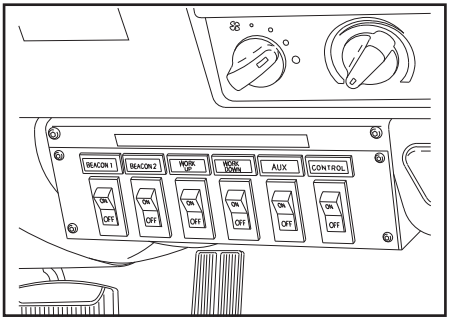

1. Turn on the safety and work lights. (Switches can be located in the dash panel, in the headliner or in the floor mount.)

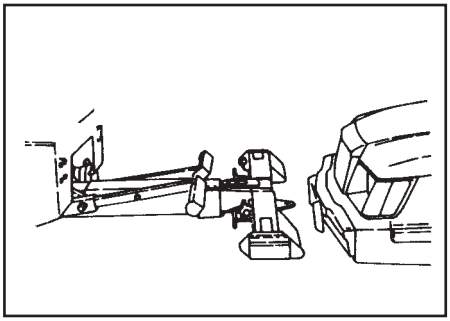

2. Position the truck within 3 to 4 ft. of the subject vehicle and as close to the direction of the pull as possible.

3. Set the truck's parking brakes and put the transmission in park or neutral

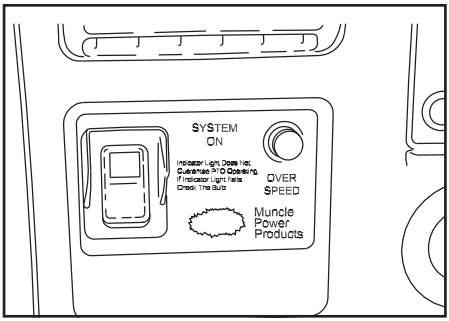

4. Engage the Power-Take-Off (PTO) or Clutch Pump and the hand controller using the "Control" switch in the switch panel.

NOTICE

NEVER TRAVEL WITH THE POWER TAKE OFF CONTROL ENGAGED. This could result in damage to the PTO unit and the recovery vehicle's transmission. *Some PTO/Transission combinations allow for the PTO to be operated during travel. Consult your specific PTO Operators Manual.*

5. Adjust the electronic or manual throttle control to set the engine speed to approximately 1000-1500 R.P.M. Refer to chassis operator's manual for proper operation of the auxiliary throttle. If your chassis is equipped with the remote throttle up option from the chassis manufacturer there is no need to set the throttle up control in the cab because the throttle will automatically increase when any of the hydraulic functions are operated.

NOTICE

Never exceed 1500 R.P.M. When your ready to travel, reset the engine idle to normal.

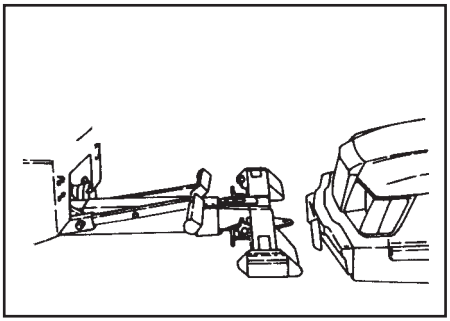

6. Confirm the truck's position in relation to the vehicle to be towed. Three (3) to four (4)) feet is recommended. Reposition the HPL if necessary. Be sure the towed vehicle is not in gear or park. Keep the brake set.

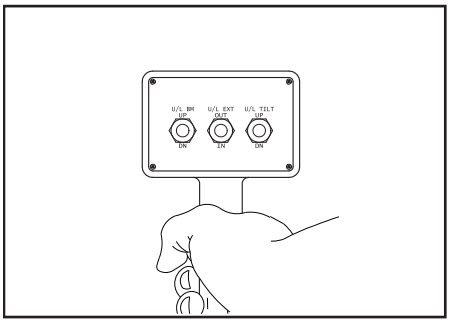

7. Using the hand controller or the manual controls located at the rear of the body, lower the underlift.

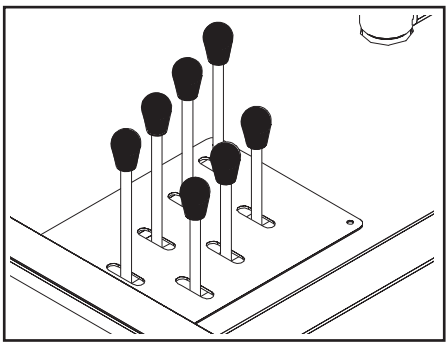

NOTICE

Be sure the casualty vehicle is not in gear or park. Keep the casualty vehicle parking brake set.

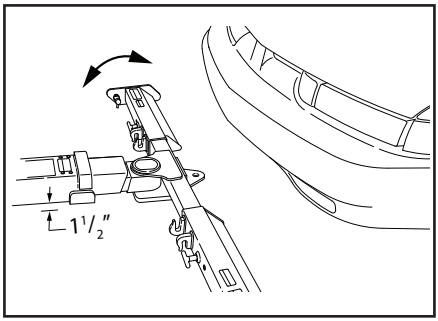

8. Lower the lift arm to about 1-1/2" from the ground and swing the cross bar parallel to the tires.

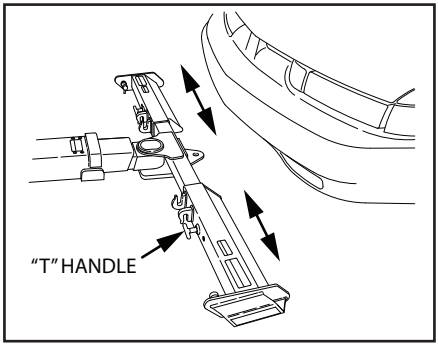

9. Set the grid width as required for the vehicle to be towed. To set the grid width, loosen the "T" handles on the front of the grid arms and pull out. Be sure both grids are as close to the center of the boom as possible, and wide enough to allow the L-Arms to slide into their channels. Tighten the "T" handles to secure the grids

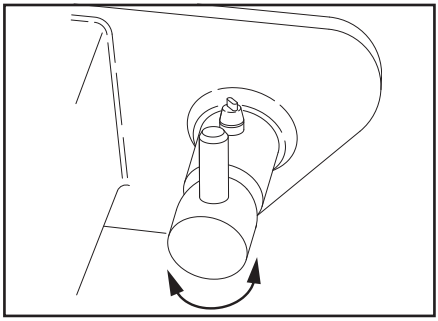

10. Retract the "Cam" handle locking pin on the grid by turning it 180°. It should remain in the open position.

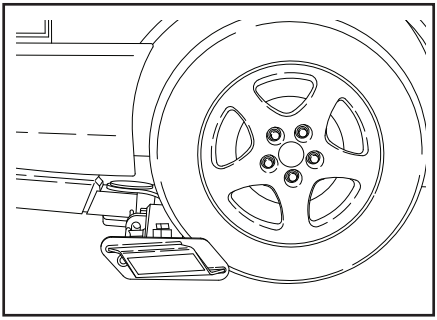

11. Extend the underlift under the vehicle being sure that all under carriage parts are cleared and that the front portion of the grid is in contact with both tires. Lower the grid fully to the ground.

NOTICE

There is no reason for the operator to get under the casualty vehicle.

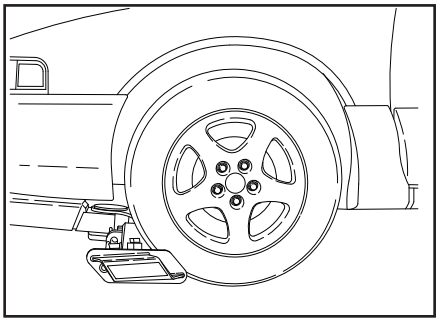

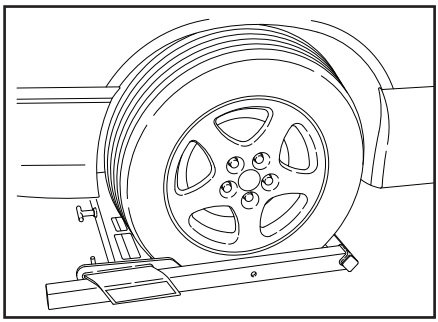

12. Take the L-Arms and slide them into the channels on the side of the grid. Make sure that they are resting snugly against the tires, with the L-Arms in close contact with the tires. Then reset the locking pin by turning the “Cam” handle back to the original position. The tires are now confined front and back. Visually inspect the tire to grid contact before proceeding.

NOTICE

Be sure that the pin seats in one of the holes.

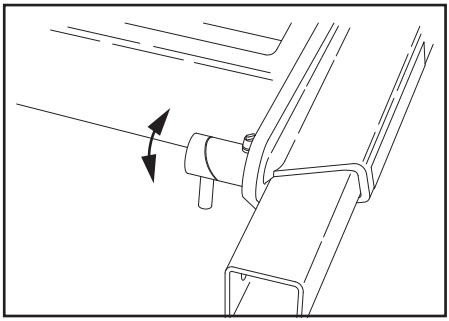

13. Visually inspect the tire to grid contact before proceeding.

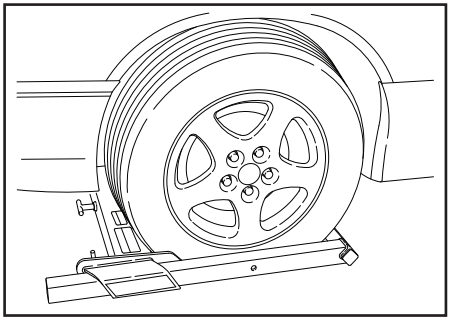

14. After securing the grid arms around the towed vehicles tires and before making the actual lift, check to be sure the towed vehicle’s parking brake is released, the transmission is in neutral, and the wheels are straight.

NOTICE

If vehicle to be towed is on a slope, do not release the brake until the tie-down straps are installed. Observe the wheels in the grid for any slippage.

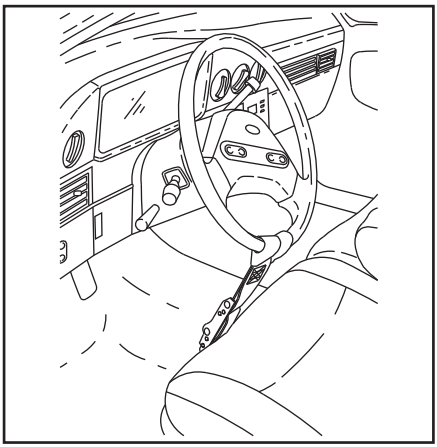

15. It is recommended that the steering wheel be secured by a steering wheel strap for any tow.

16. Lift the vehicle high enough to allow the tires to clear the ground. Make sure that the grid is not in contact with any engine or body components.

17. Remove the tie-down straps from tool boxes and attach the tie-down straps. **(See Tie-Down Strap instructions).**

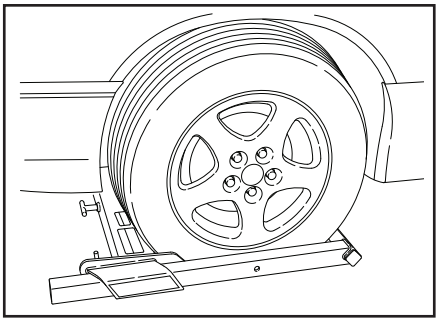

18. With the straps in place, the vehicle in neutral and the parking brake released, you can move the vehicle safely up, down, in or out. All of these movements are hydraulically controlled by the hand controller.

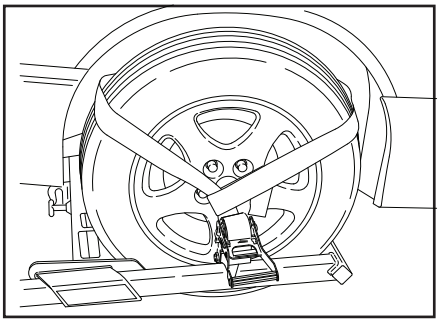

19. Raise the vehicle into the final towing position observing the far end for sufficient ground clearance. It is possible to set the rear of a front lifted vehicle completely onto the ground, causing damage. Take irregular roadsurfaces into consideration. Observe the lift function from the side and away from both vehicles if possible.

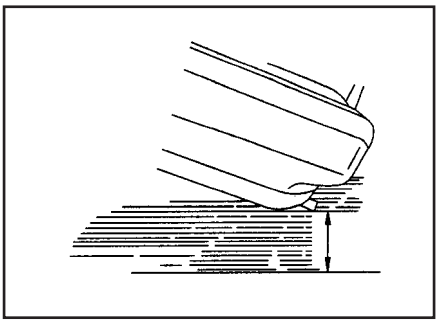

NOTICE

For the best towing and maneuverability the underlift boom should be as close to horizontal as possible.

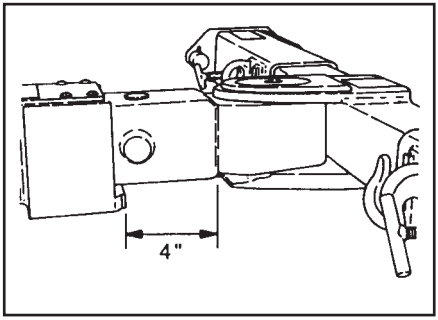

20. Power retract the grid boom until the towed vehicle is about 3 to 4 feet from the back of the truck. Leave enough room to maneuver around corners without corner binding or causing contact between the two (2) vehicles. Be sure that the boom is extended at least 4” to ensure unobstructed crossbar pivoting.

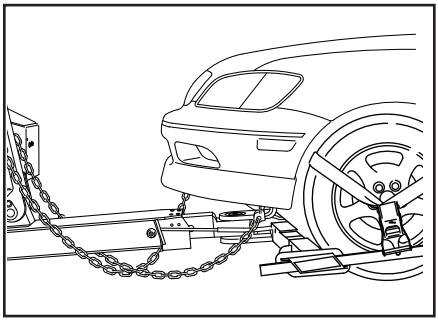

21. Be sure to maintain sufficient clearances with the bottom of the towed vehicle.

22. Attach the safety chains and towing lights. **Safety chains should be crossed from one side of the recovery vehicle to the opposite side of the towed vehicle.**

4.2 TIE-DOWN STRAPS - MANUAL GRID

The HPL is supplied with a set of high strength polyester web tie-down straps. They are to be used to secure wheels of the towed vehicle to the wheel grid.

⚠ WARNING

Never tow a vehicle without the tie-down straps installed.

The tie-down strap assembly is comprised of 2 basic components:

1. The Strap/Hook Assembly
2. The Ratchet Spool Mechanism

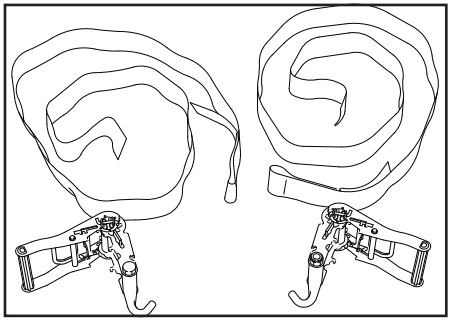

The following steps should be followed to properly install the tie-down straps:

USING THE RATCHET SPOOL MECHANISM

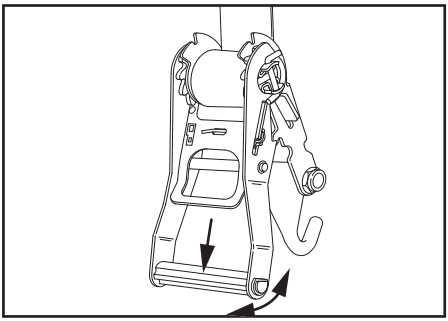

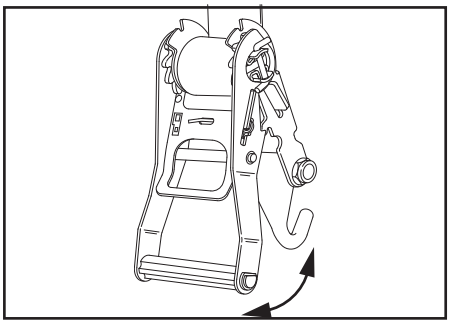

1. First set the spool into “free spool”. This is done by pulling the lock bar out and swinging the handle upward until it rests in the free spool notch and then simply pulling out the amount of strap required to fit over the tire.
2. Now pull on the lock bar and move it downward until it engages the ratchet teeth on the take-up spool. By pushing and pulling the handle up and down, the strap will be wound onto the spool.
3. To release the ratchet, simply pull on the locking bar, disengaging the teeth and raise the handle to the “free spool” position.

INSTALLING THE TIE-DOWN STRAPS

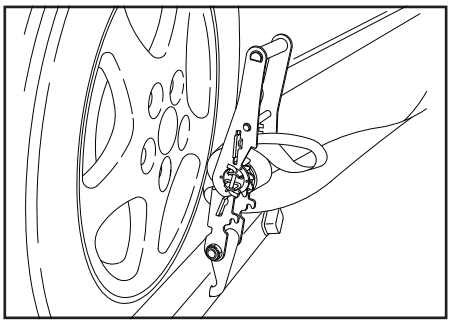

1. With the vehicle lifted just barely off the ground, attach the strap to the L-Arm. Be sure the hook on the ratchet is securely seated in the L-Arm.

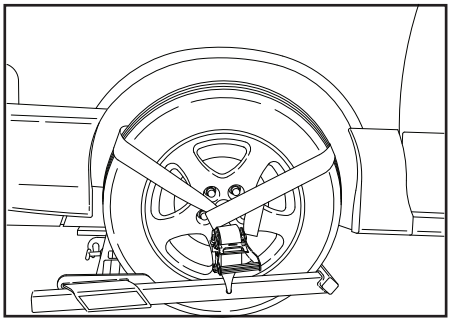

2. Set the ratchet spool in “free spool” position and pull the webbed strap out and form a loop which will wrap around the tire. Be sure the loop is over a minimum of 1/3 of the tire.

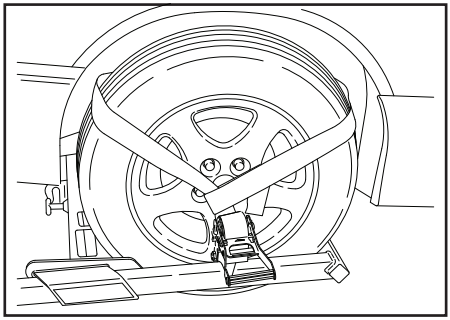

3. Take up the slack in the strap by ratcheting the take-up spool arm. Continue until the tires show some compression. Repeat for other side.

4. Raise the wheel grid to the towing position.

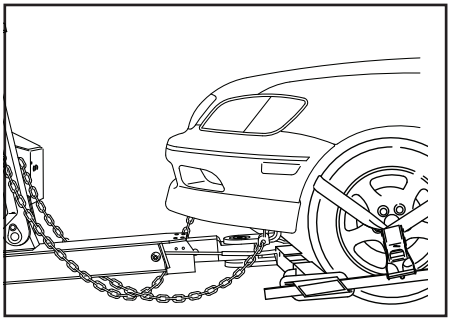

NOTICE

Re-tighten the ratchet periodically as the tire settles in grid from towing.

⚠ WARNING

Never tow a vehicle without tire tie-down straps and safety chains installed.

4.3 UNDERLIFT OPERATION - PIVOTING GRIDS

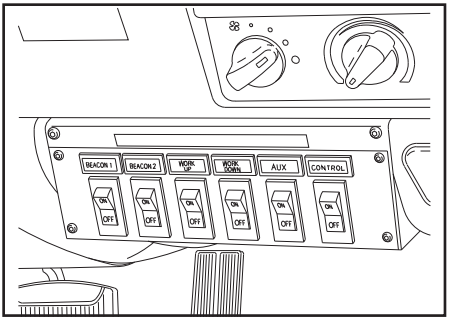

1. Turn on the safety and work lights. (Switches can be located in the dash panel, in the headliner or in the floor mount.)

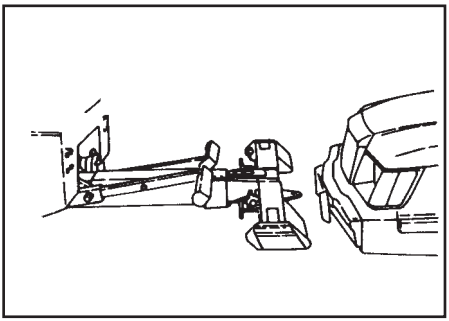

2. Position the truck within 3 to 4 ft. of the subject vehicle and as close to the direction of the pull as possible.

3. Set the truck's parking brakes and put the transmission in park or neutral

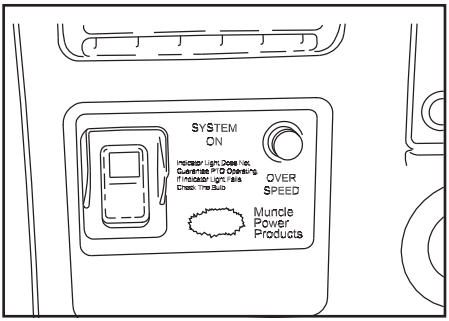

4. Engage the Power-Take-Off (PTO) or Clutch Pump and the hand controller using the "Control" switch in the switch panel.

NOTICE

NEVER TRAVEL WITH THE POWER TAKE OFF CONTROL ENGAGED. This could result in damage to the PTO unit and the recovery vehicle's transmission. *Some PTO/Transission combinations allow for the PTO to be operated during travel. Consult your specific PTO Operators Manual.*

5. Adjust the electronic or manual throttle control to set the engine speed to approximately 1000-1500 R.P.M. Refer to chassis operator's manual for proper operation of the auxiliary throttle. If your chassis is equipped with the remote throttle up option from the chassis manufacturer there is no need to set the throttle up control in the cab because the throttle will automatically increase when any of the hydraulic functions are operated.

NOTICE

Never exceed 1500 R.P.M. When your ready to travel, reset the engine idle to normal.

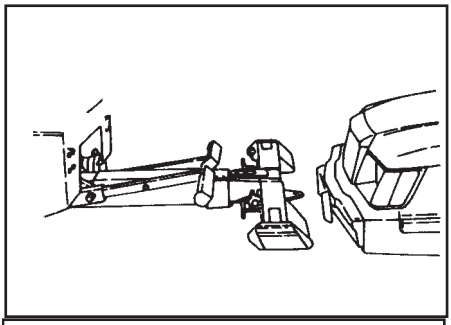

6. Confirm the truck's position in relation to the vehicle to be towed. Three (3) to four (4) feet is recommended. Reposition the HPL if necessary. Be sure the towed vehicle is not in gear or park. Keep the brake set.

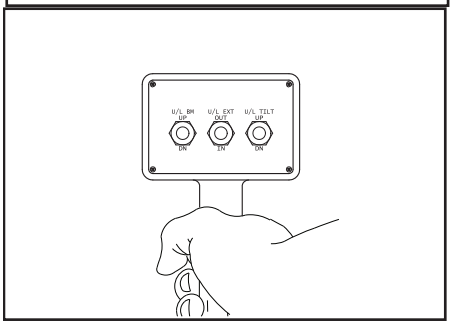

7. Using the hand controller or the manual controls located at the rear of the body, unfold the underlift using the tilt down function. The underlift level stop assist system will stop the underlift travel at a preset position..

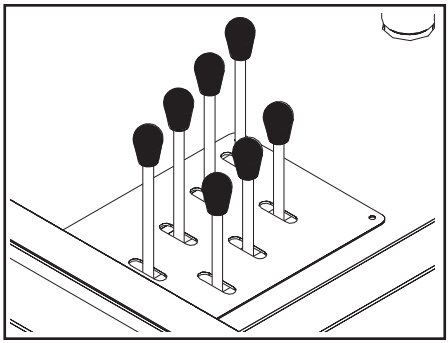

NOTICE

Be sure the casualty vehicle is not in gear or park. Keep the casualty vehicle parking brake set.

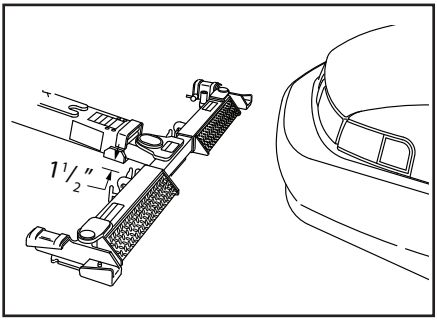

8. Lower the lift arm to about 1-1/2" from the ground and swing the cross bar parallel to the tires..

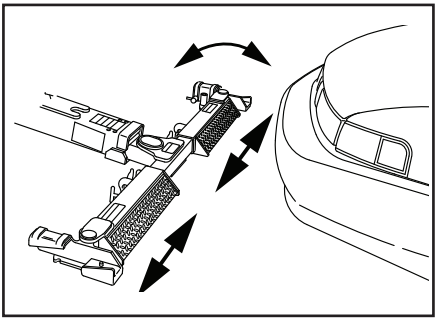

9. Set the grid width as required for the vehicle to be towed. To set the grid width, loosen the "T" handles on the front of the grid arms and pull out. Be sure both grids are as close to the center of the boom as possible, and wide enough to allow the L-Arms to slide into their channels. Tighten the "T" handles to secure the grids

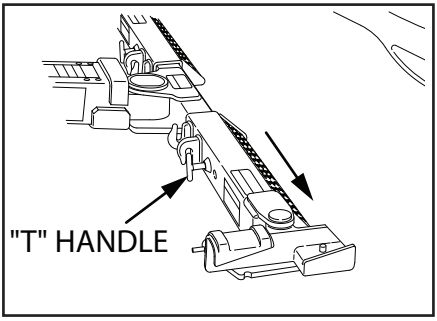

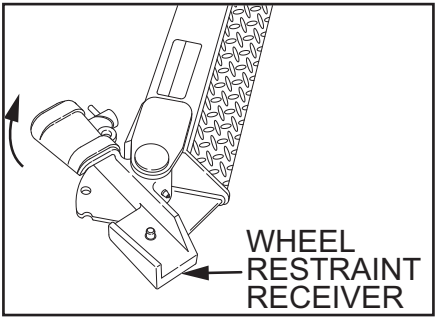

10. Pivot the wheel restraint receivers on the end of the grid arms outward by lifting up on the receiver. Rotate the "Cam" handles on the receivers 180° to the open position for easier placement of the restraint into the receiver.

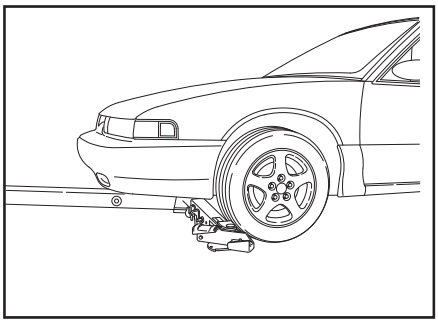

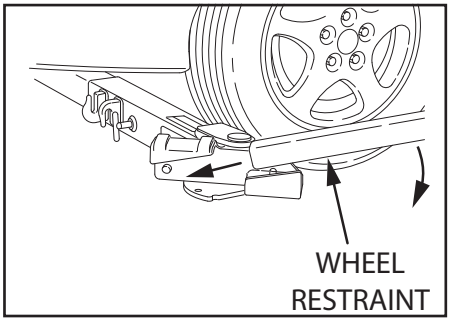

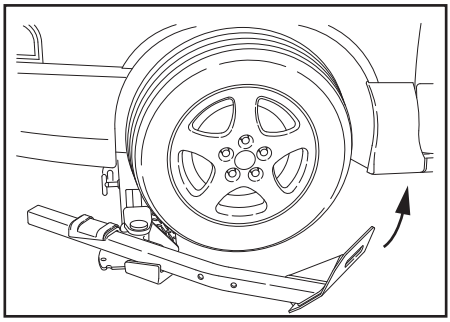

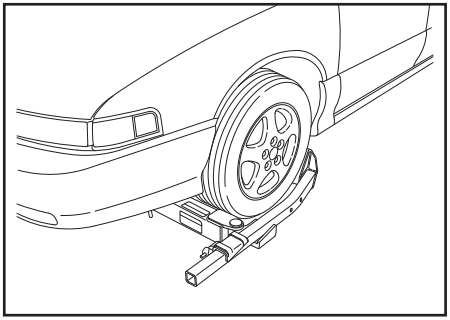

11. Extend the underlift under the vehicle being sure that all under carriage parts are cleared and that the front portion of the grid is in contact with both tires. Lower the grid fully to the ground.

NOTICE

There is no reason for the operator to get under the casualty vehicle.

12. Visually inspect the tire to grid contact before proceeding.

13. Take the wheel receivers and slide them into the channels on the side of the grid. Make sure that they are resting snugly against the tires, with the wheel receivers are in close contact with the tires. Then reset the locking pin by turning the “Cam” handle back to the original position. **Be sure that the pin seats in one of the holes.** The tires are now confined front and back.

NOTICE

Be sure that the pin seats in one of the holes.

14. Pivot the receivers and wheel restraints inline with the tires. Make any adjustments to the wheel restraints making sure that you clear body and undercarriage components.

NOTICE

Be sure that the holes in the bottom of the restraints lock over the retaining pin on the receivers.

15. Rotate the “Cam” handles back to their original positions making sure that they fully retract to the closed position. The tires are confined front and back. Readjust the wheel restraints to insure that they are resting snugly against the tires.

16. After securing the grid arms around the towed vehicles tires and before making the actual lift, check to be sure the towed vehicle’s parking brake is released, the transmission is in neutral, and the wheels are straight.

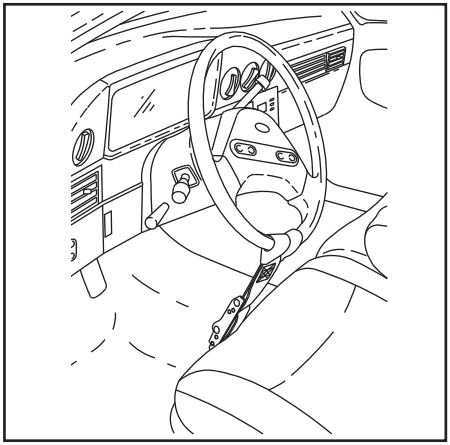

NOTICE

If vehicle to be towed is on a slope, do not release the brake until the tie-down straps are installed. Observe the wheels in the grid for any slippage.

17. It is recommended that the steering wheel be secured by a steering wheel strap for any tow.

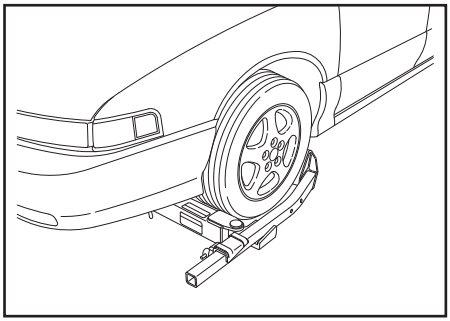

18. Lift the vehicle high enough to allow the tires to clear the ground. Make sure that the grid is not in contact with any engine or body components.

19. Remove the tie-down straps from tool boxes and attach the tie-down straps. **(See Tie-Down Strap instructions).**

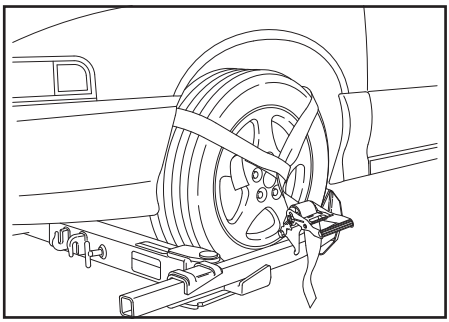

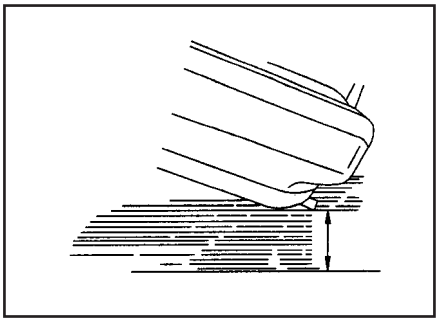

20. With the straps in place, the vehicle in neutral and the parking brake released, you can move the vehicle safely up, down, in or out. All of these movements are hydraulically controlled by the hand controller.

21. Raise the vehicle into the final towing position observing the far end for sufficient ground clearance. It is possible to set the rear of a front lifted vehicle completely onto the ground, causing damage. Take irregular roadsurfaces into consideration. Observe the lift function from the side and away from both vehicles if possible

NOTICE

For the best towing and maneuverability the underlift boom should be as close to horizontal as possible.

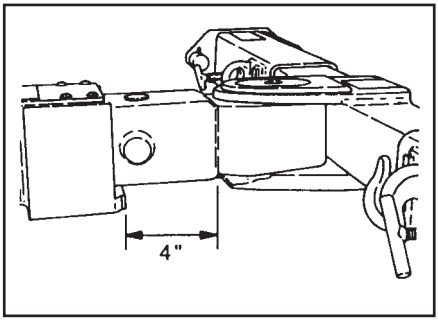

22. Power retract the grid boom until the towed vehicle is about 3 to 4 feet from the back of the truck. Leave enough room to maneuver around corners without corner binding or causing contact between the two (2) vehicles. Be sure that the boom is extended at least 4” to ensure unobstructed crossbar pivoting.

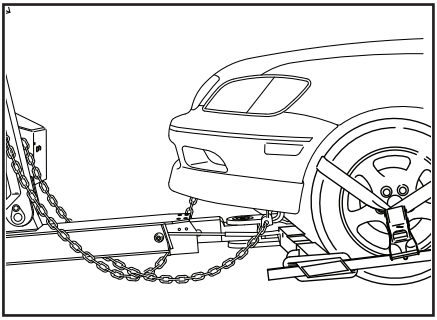

23. Be sure to maintain sufficient clearances with the bottom of the towed vehicle.

24. Attach the safety chains and towing lights. **Safety chains should be crossed from one side of the recovery vehicle to the opposite side of the towed vehicle.**

4.4 TIE-DOWN STRAPS - PIVOTING GRID

The “T37” pivoting grid is supplied with a set of high-strength polyester web tie-down straps. They are to be used to secure wheels of the towed vehicle to the wheel grid.

⚠ WARNING

Never tow a vehicle without the tie-down straps installed.

The tie-down strap assembly is comprised of 2 basic components:

1. (2) The Strap/Hook Assemblies
2. (2) The Ratchet Spool Mechanisms

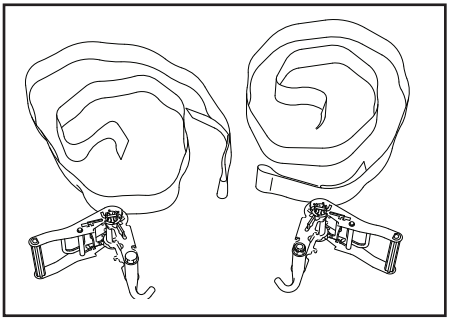

Follow these steps to properly install the tie-down straps:

INSTALLING THE RATCHET SPOOL MECHANISM

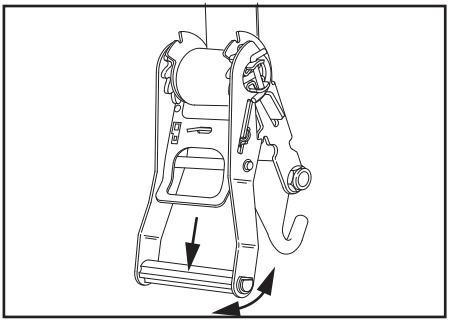

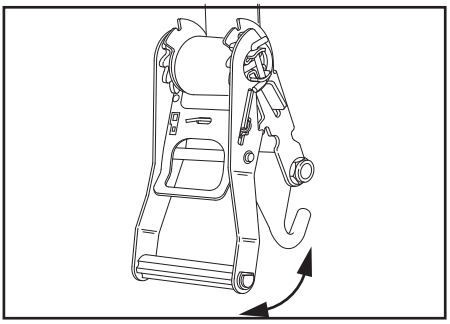

1. First set the spool into “free spool”. This is done by pulling the lock bar out and swinging the handle upward until it rests in the free spool notch and then simply pulling out the amount of strap required to fit over the tire.
2. Now pull on the lock bar and move it downward until it engages the ratchet teeth on the take-up spool. By pushing and pulling the handle up and down, the strap will be wound onto the spool.
3. To release the ratchet, simply pull on the locking bar, disengaging the teeth and raise the handle to the “free spool” position.

INSTALLING THE TIE-DOWN STRAPS

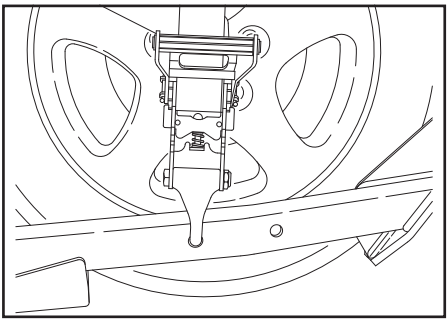

1. With the vehicle lifted just barely off the ground, attach the strap to the wheel restraints. Be sure the hook on the ratchet is securely seated in the wheel restraint.

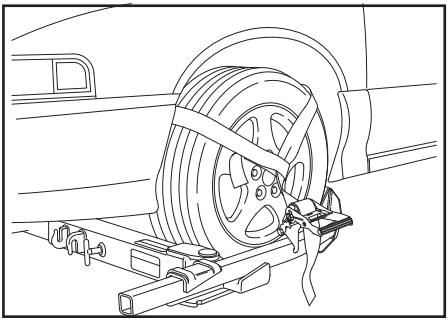

2. Set the ratchet spool in “free spool” position and pull the webbed strap out and form a loop which will wrap around the tire. Be sure the loop is over a minimum of 1/3 of the tire.

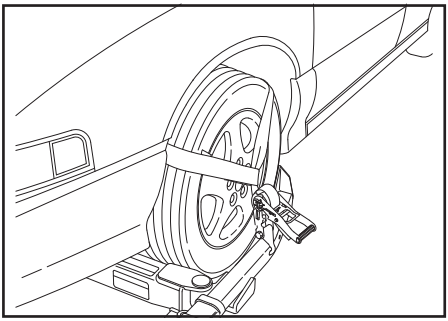

3. Take up the slack in the strap by ratcheting the take-up spool arm. Continue until the tires show some compression. Repeat for other side.
4. Raise the wheel grid to the towing position.

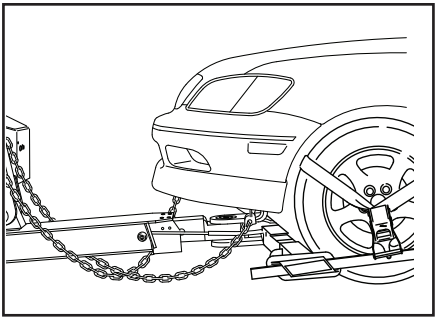

NOTICE

Re-tighten the ratchet periodically as the tire settles in grid from towing.

⚠ WARNING

Never tow a vehicle without tire tie-down straps and safety chains installed.

4.5 FRAME FORK LIFT ATTACHMENT PACKAGE

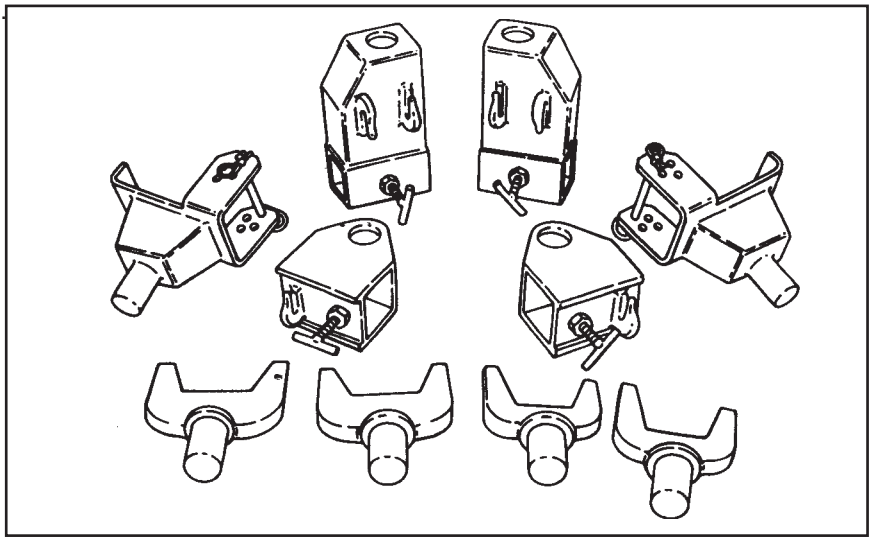

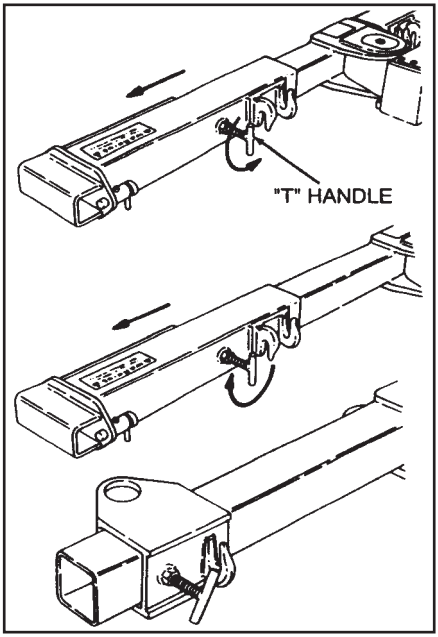

1. First, you will need to remove the wheel lift grids and install the lift attachment receivers.

2. To remove the wheel lift grids, loosen the “T” handles on the front of the grid arms and pull the grids out to the stops.

3. Turn the “T” handle clockwise until the grid is release, then remove the grid from the crossbar. Do this on both sides of the bar.

4. Now you will need to choose the lift attachment receivers that are best suited to your needs and slide them over the end of the crossbar. Turn the “T” handles to lock the receivers onto the crossbar.

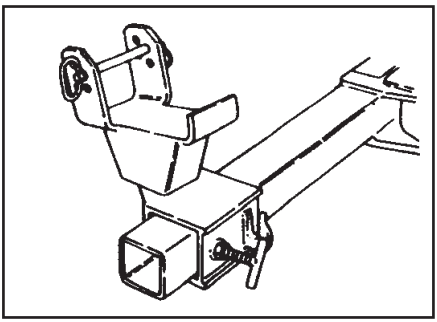

5. Now, choose the lift attachments that are best suited to your need and insert them into the receivers that you just put onto the crossbar. (Frame forks are for lifting by axles and frame crossmembers, spring hanger attachments are for lifting by leaf springs).

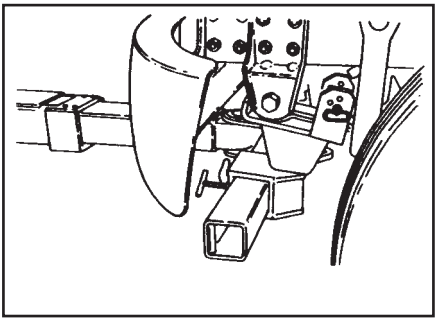

6. Move the lift attachments under the vehicle so that they are in the proper position for lifting.

⚠ CAUTION

Make sure you are not attaching the lift attachments to any steering components.

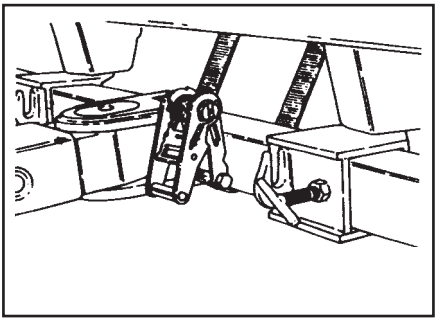

7. Now you may lift the vehicle slightly off the ground.

8. Secure the vehicle to the wheel grid crossbar with straps and ratchets.

4.6 RECOVERY WINCH OPERATION (OPTIONAL)

The HPL deck mounted recovery winch is an extremely effective tool in recovery or retrieval prior to lifting and towing. To operate the winch effectively, care and thought must be given.

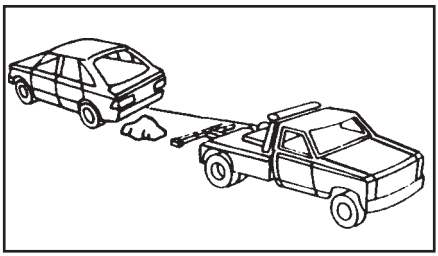

1. Check the direction you wish the work to travel, being sure there are no major obstacles in the way.

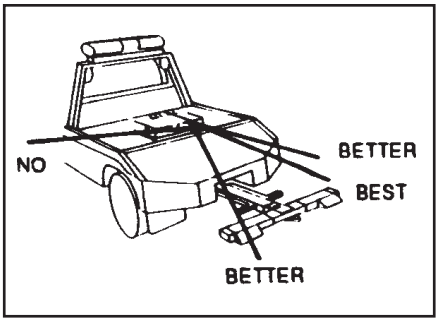

2. Position and align the truck to obtain as direct a pull as possible. Straight line pulls are the best and most efficient.

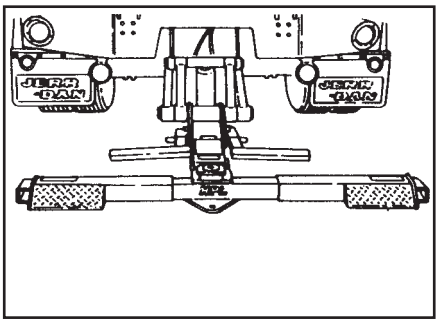

3. Set the brakes on your Jerr-Dan unit. If the pull will be a heavy one you may also use the controls to set the grid boom down on the ground giving the truck more traction and resistance to slippage. The use of scotch blocks is also recommended.

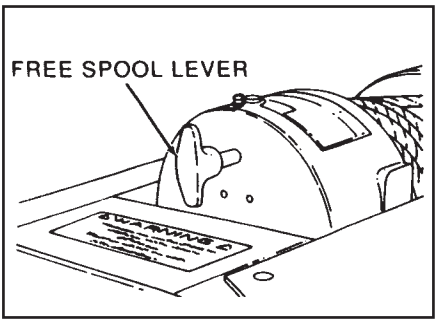

4. Release the free spooling lever on the winch by pulling and turning the handle 90°. Never pull this while the wire rope/cable is under load! This allows the wire rope/cable to be pulled directly off the drum to the work.

⚠ WARNING

Never turn the handle while the wire rope is under load.

⚠ WARNING

Maintain a minimum of five (5) wraps of wire rope/cable on the winch drum at all times. Also maintain a uniform wrap of wire rope/cable on the drum to avaoid crushing of the wire rope/cable.

⚠ WARNING

Always wear gloves when handling wire rope/cable.

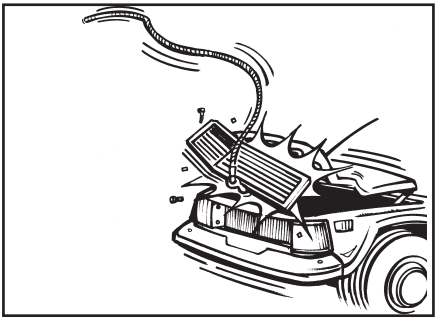

5. Attach the wire rope hook to a chain sling, or bridle and hook securely to the work. Be sure of this hook up; you don't want it breaking loose during the pull. (See the safety sections earlier in this manual). Do not connect to thin or loose body panels or components that could break loose during the winching operation. Slings and bridles are usually designed with hook clusters on them. Most chassis manufacturer's provide tie-down hooks and/or slots in chassis frames that may be able to be used as recovery attachment points. (Consult the Chassis Manufacturer's Towing Manual and/or the American Automobile Association (AAA) Towing Manuals.) DO NOT EXCEED THE WORKING LIMIT OF THE WIRE ROPE. Wire rope ratings can be found on the placard on your unit or in Section 7.1 of this manual. If a heavy lift or pull is to be made exceeding the wire rope working limits, additional cable lines will be necessary.

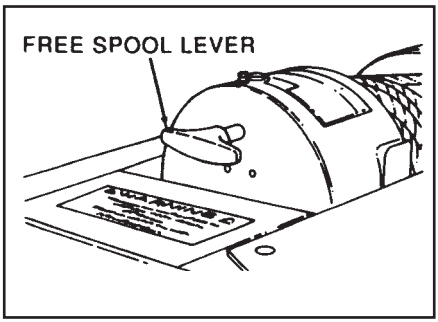

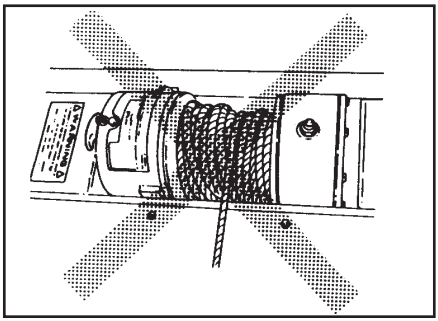

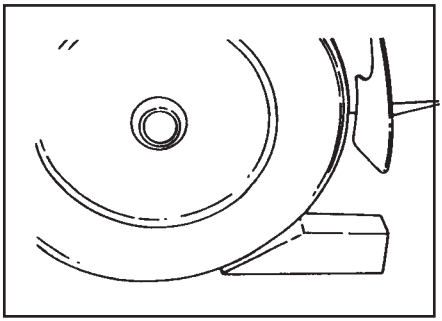

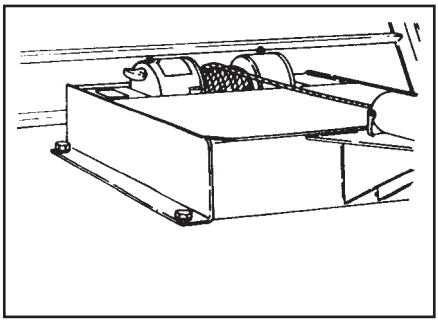

6. Re-engage the winch drive by turning the handle back 90°. It should retract cleanly. Jog the winch control lever to confirm engagement. Using the controls, slowly take up any slack in the wire rope/cable.

7. With the wire rope/cable tight, slowly bring it in, observing both the work and the cable drum. Be sure that the wire rope /cable does not cross wrap or criss-cross on the drum. Observe the path the work must travel for snags or obstructions which could stall the work movement and overload the wire rope/ cable.

8. Once the work is in the desired position, use blocks or tie the work down if there is an question about the stability. Slowly reduce the wire rope/ cable tension using the controls. After enough wire rope/cable has been unwound, you may remove the hookup.

9. Now slowly retrieve the wire rope, carefully winding the wire rope onto the drum. Many operators take this opportunity to do a visual inspection.

⚠ CAUTION

Don’t stress the wire rope by over retrieving or tightening and exceeding the working limit. Over stressing the wire rope beyond its working limit can cause damage resulting in premature wire rope failure.

4.7 WRECKER BOOM OPERATION - SINGLE LINE BOOM (OPTIONAL)

The HPL wrecker boom is an extremely effective tool in recovery or retrieval prior to lifting and towing. To operate the winch effectively, care and thought must be given.

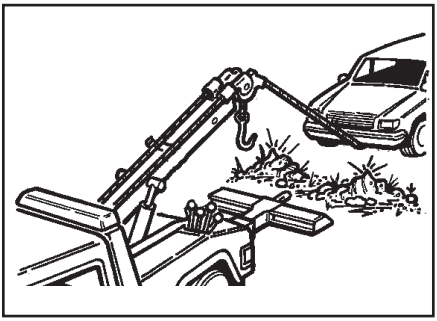

1. Check the direction you wish the work to travel, being sure there are no major obstacles in the way.

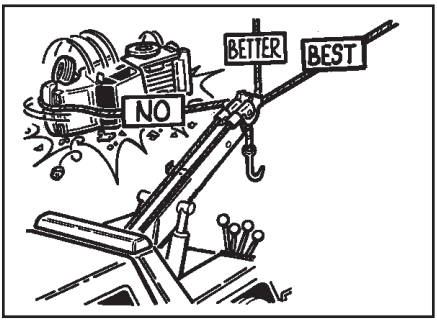

2. Position and align the truck to obtain as direct a pull as possible. Straight line pulls are the best and most efficient.

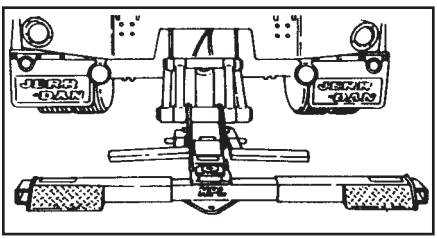

3. Set the brakes on your Jerr-Dan unit. If the pull will be a heavy one you may also use the controls to set the grid boom down on the ground giving the truck more traction and resistance to slippage. The use of scotch blocks is also recommended.

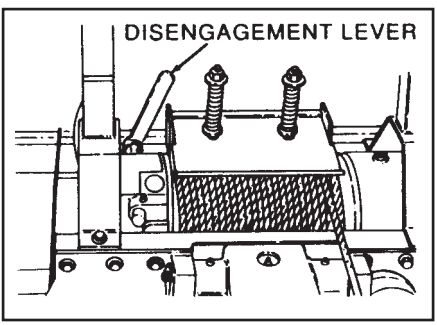

4. Set the boom winch into “free spool” using the disengagement lever. Moving the boom head with the wire rope/cable locked can result in damage to both the wire rope/cable and boom.

⚠ WARNING

Never disengage the winch while the wire rope is under load.

5. Position the boom head using the boom up/down and boom in/out controls..

6. Unwind enough wire rope/cable to make the hook-up.

⚠ WARNING

Maintain a minimum of five (5) wraps of wire rope/cable on the winch drum at all times. Also maintain a uniform wrap of wire rope/cable on the drum to avaoid crushing of the wire rope/cable.

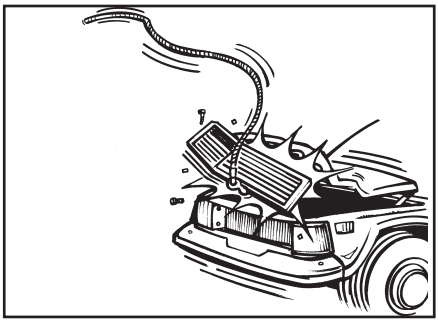

⚠ WARNING

Always wear gloves when handling wire rope/cable.

7. Attach the wire rope hook to a chain sling, or bridle and hook securely to the work. Be sure of this hook up; you don't want it breaking loose during the pull. (See the safety sections earlier in this manual). Do not connect to thin or loose body panels or components that could break loose during the winching operation. Slings and bridles are usually designed with hook clusters on them. Most chassis manufacturer's provide tie-down hooks and/or slots in chassis frames that may be able to be used as recovery attachment points. (Consult the Chassis Manufacturer's Towing Manual and/or the American Automobile Association (AAA) Towing Manuals.) DO NOT EXCEED THE WORKING LIMIT OF THE WIRE ROPE. Wire rope ratings can be found on the placard on your unit or in Section 7.1 of this manual. If a heavy lift or pull is to be made exceeding the wire rope working limits, additional cable lines will be necessary.

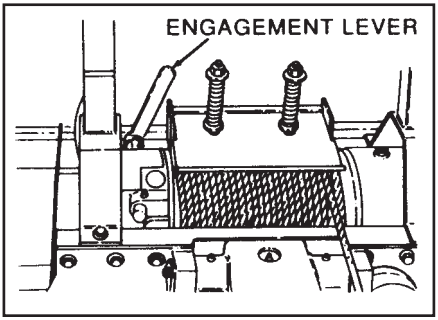

8. Re-engage the winch and slowly take up the slack in the wire rope/cable. Check all hooks and chains for possible slippage before continuing the lift or pull. As the wire rope/cable is retrieved, be sure that it doesn't criss-cross on the drum.

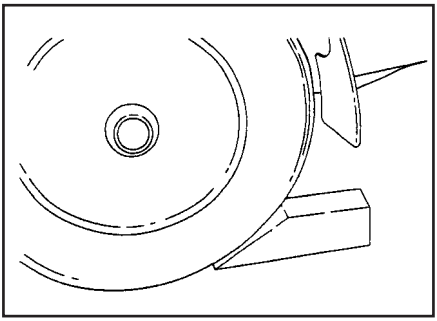

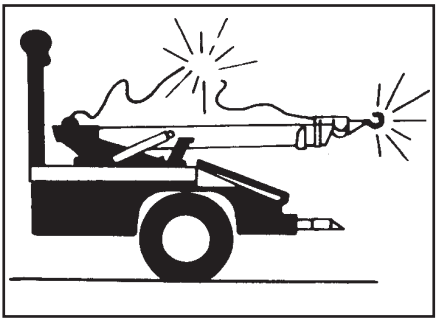

9. Complete the lift or pull being sure the work is placed in a stable location where it won't slip or roll. Use blocks or tie the work down if there is any question about the stability after the wire rope/cables and chains are removed.
10. Unwind enough wire rope/cable to remove the hooks or chains and remove them carefully. Avoid straddling the wire rope/cable.
11. Respool the wire rope/cable and take this opportunity to inspect it for damage.
12. Retract the boom and lower it to the normal (horizontal) position and carefully snug up any loose wire rope/cable.

⚠ CAUTION

Don't stress the wire rope by over retrieving or tightening and exceeding the working limit. Over stressing the wire rope beyond its working limit can cause damage resulting in premature wire rope failure.

4.8 WRECKER BOOM OPERATION - DUAL LINE BOOM (OPTIONAL)

The HPL wrecker boom is an extremely effective tool in recovery or retrieval prior to lifting and towing. To operate the winch effectively, care and thought must be given.

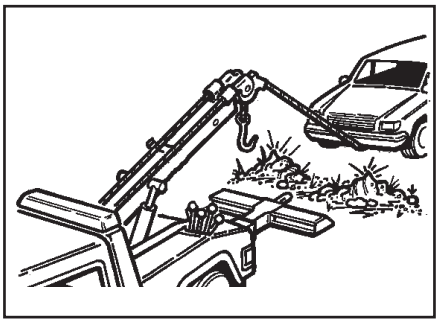

1. Check the direction you wish the work to travel, being sure there are no major obstacles in the way.

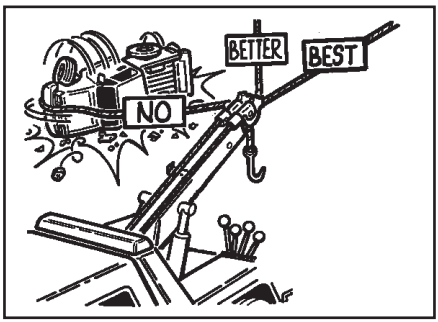

2. Position and align the truck to obtain as direct a pull as possible. Straight line pulls are the best and most efficient.

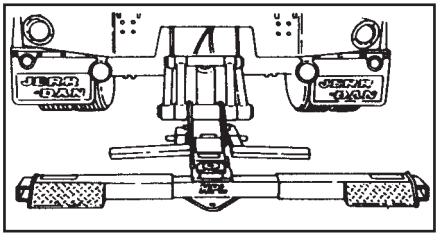

3. Set the brakes on your Jerr-Dan unit. If the pull will be a heavy one you may also use the controls to set the grid boom down on the ground giving the truck more traction and resistance to slippage. The use of scotch blocks is also recommended.

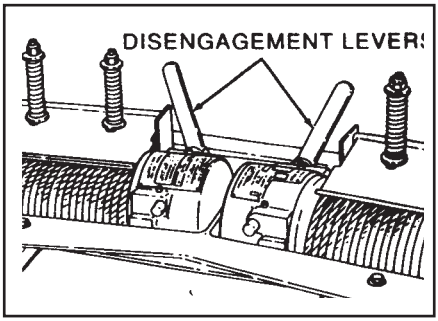

4. Set the boom winch into “free spool” using the disengagement lever. Moving the boom head with the wire rope/cable locked can result in damage to both the wire rope/cable and boom.

⚠ WARNING

Never disengage the winch while the wire rope is under load.

5. Position the boom head using the boom up/down and boom in/out controls..

6. Unwind enough wire rope/cable to make the hook-up.

⚠ WARNING

Maintain a minimum of five (5) wraps of wire rope/cable on the winch drum at all times. Also maintain a uniform wrap of wire rope/cable on the drum to avaoid crushing of the wire rope/cable.

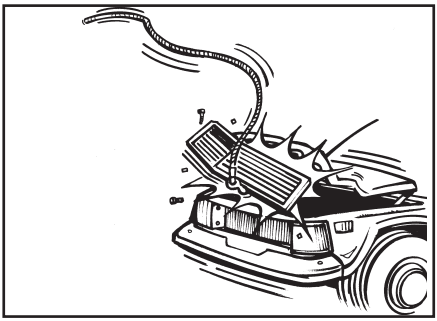

⚠ WARNING

Always wear gloves when handling wire rope/cable.

7. Attach the wire rope hook to a chain sling, or bridle and hook securely to the work. Be sure of this hook up; you don't want it breaking loose during the pull.

(See the safety sections earlier in this manual). Do not connect to thin or loose body panels or components that could break loose during the winching operation. Slings and bridles are usually designed with hook clusters on them. Most chassis manufacturer's provide tie-down hooks and/or slots in chassis frames that may be able to be used as recovery attachment points. (Consult the Chassis Manufacturer's Towing Manual and/or the American Automobile Association (AAA) Towing Manuals.) DO NOT EXCEED THE WORKING LIMIT OF THE WIRE ROPE. Wire rope ratings can be found on the placard on your unit or in Section 7.1 of this manual. If a heavy lift or pull is to be made exceeding the wire rope working limits, additional cable lines will be necessary.

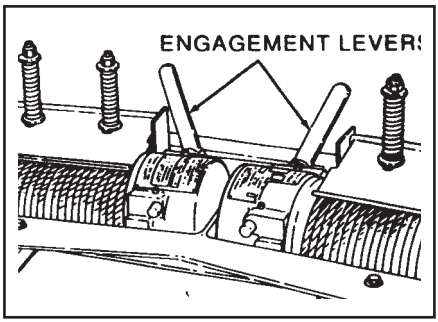

8. Re-engage the winch and slowly take up the slack in the wire rope/cable. Check all hooks and chains for possible slippage before continuing the lift or pull. As the wire rope/cable is retrieved, be sure that it doesn't criss-cross on the drum.

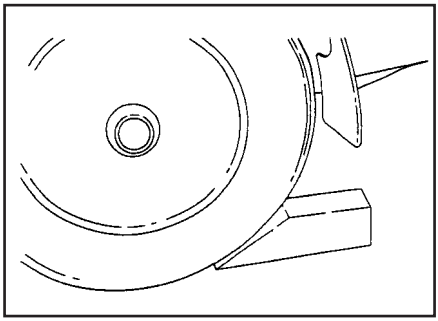

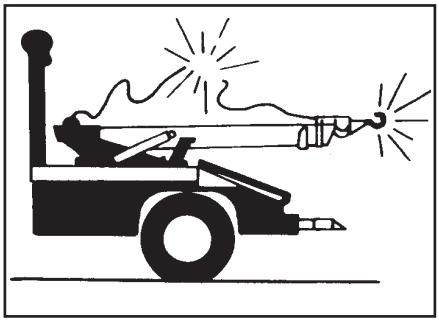

9. Complete the lift or pull being sure the work is placed in a stable location where it won't slip or roll. Use blocks or tie the work down if there is any question about the stability after the wire rope/cables and chains are removed.

10. Unwind enough wire rope/cable to remove the hooks or chains and remove them carefully. Avoid straddling the wire rope/cable.

11. Respool the wire rope/cable and take this opportunity to inspect it for damage.

12. Retract the boom and lower it to the normal (horizontal) position and carefully snug up any loose wire rope/cable.

⚠ CAUTION

Don't stress the wire rope by over retrieving or tightening and exceeding the working limit. Over stressing the wire rope beyond its working limit can cause damage resulting in premature wire rope failure.

4.9 TOW SLING OPERATION (OPTIONAL)

If your HPL is equipped with a tow sling, then Consult the AAA Towing Manual and follow these step:.

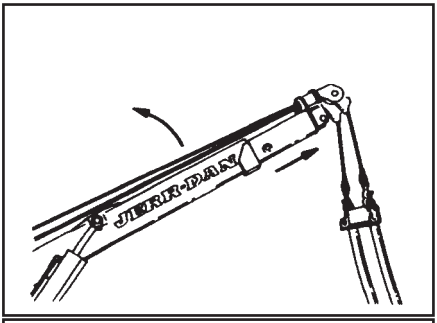

1. Raise the wrecker boom to approximately 45° and telescope out to allow for working clearance.

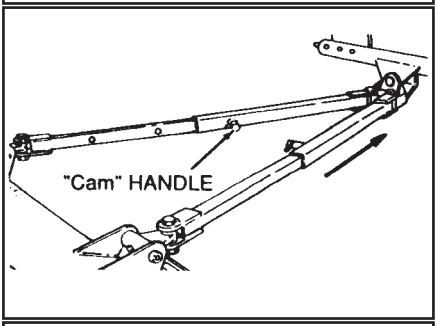

2. Lower the lift grid to 1-1/2” from the ground.

3. Lower the sling assembly to horizontal using the winch. Rotate the “Cam” handles on the stand off bars 90°. Pull the stand off bars to their full extension.

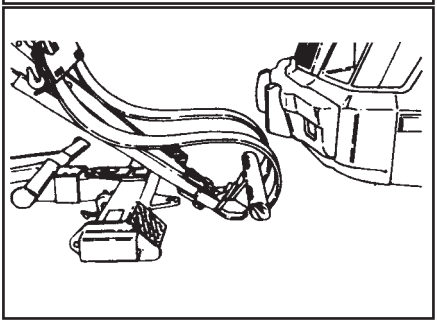

4. Lower the tow sling on the skid plate so that it will easily clear the bottom of the vehicle.

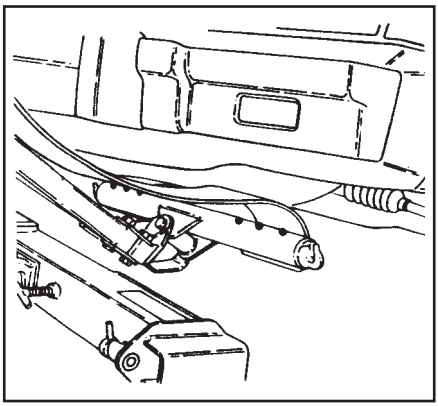

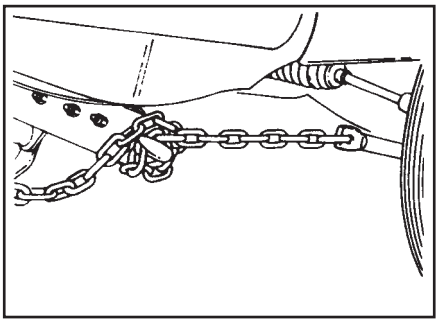

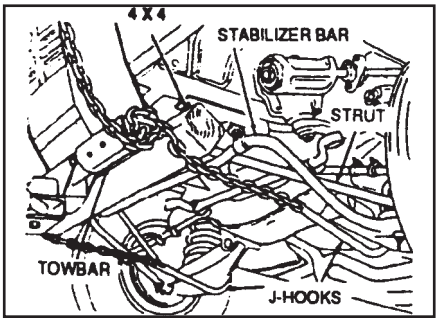

5. Maneuver the sling under the vehicle to be towed, far enough under so the vehicle will ride on the rubber belts
6. The chain J hooks must be secured firmly around the axle or the frame of the towed vehicle. When fastening the J hook, be sure the it is attached to the towed vehicle in such a manner as to prevent any damage to the brake lines or other functional parts of the vehicle. With the chain securely fastened in the hook on each side of the bottom bar assembly, the chain should then be wrapped around the bottom bar. Secure the remaining chain to the hook at the top of the tow sling.
7. In using the tow sling with late model vehicles it may be necessary to use spacer blocks or a cross beam in order to get sufficient height to prevent any damage to body parts. The AAA Towing Manual will diagram this.
8. Be sure the fuel tank is not in contact with the sling or towing mechanism.

⚠ WARNING

The fuel tank must not support any weight whatsoever.

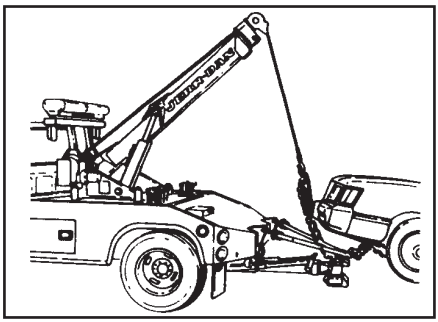

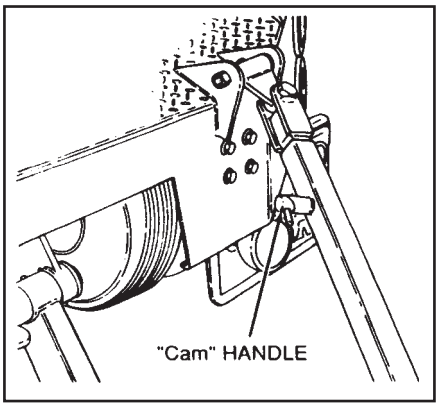

9. Raise the vehicle using the wrecker boom winch. (Read the safety and operating instructions for the boom and winch beforehand.) The vehicle should be raised until the wheels are a minimum of ten inches off the ground. Observe the opposite end of the vehicle for ground clearance.

10. When using Dual Winch Boom ensure that both wire rope/ cables are retracted with equal tension.

11. Retract the boom slowly drawing the vehicle forward until the stand off bars are fully retracted. Relock the “Cam” handles for traveling by turning 90° to the closed position.

12. The boom should be fully retracted and safety chains must be installed before traveling.

13. Raise the wheel lift grid.

⚠ CAUTION

The Bottom Anchor Assembly (round tube) must never be higher than the attachment point on the rear of the truck. The Stand Off Bar Assembly acts as a pivot in the event of a sudden stop. This will assure that the towed vehicle will not catapult forward onto the deck of the HPL.

4.10 TOWING BALL (OPTIONAL)

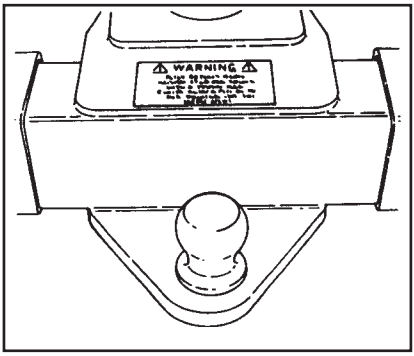

The towing ball option has its own special safety and use requirements. Since it is not likely to see continual service it is recommended that the ball be stored in the tool boxes and installed as needed. Once installed be sure to torque the nut down tightly and check it periodically when in use. Care should be taken when making a lift as the ball could come into contact with the paved surface, as the threaded shank could damage the surface if the wheel grid is moved. The grid must be fully retracted against the stop, thus restraining the cross bar from pivoting. Periodically check to assure that the grid has not drifted away from the stop causing hazardous stopping or backing up. Do not tow without attaching safety chains.

THIS PAGE IS INTENTIONALLY LEFT BLANK

SECTION 5 - EMERGENCY PROCEDURES

5.1 LOWERING OF THE WRECKER BOOM

In the event of total loss of engine power or hydraulic pump failure with an elevated boom, **Contact a local Authorized Distributor for specific instructions.**

Secure the vehicle using the following procedures:

1. Clear the area around the unit of all personnel.
2. Engage the parking brake. Place the transmission control lever in “PARK”.
3. Chock the vehicle’s front and rear wheels.
4. Section off the area to restrict any personnel from entering the area

5.2 RAISING/LOWERING/RETRACTING/TILTING THE UNDERLIFT BOOM

In the event of total loss of engine power or hydraulic pump failure with an elevated boom, **Contact a local Authorized Distributor for specific instructions.**

Secure the vehicle using the following procedures:

1. Clear the area around the unit of all personnel.
2. Engage the parking brake. Place the transmission control lever in “PARK”.
3. Chock the vehicle’s front and rear wheels.
4. Section off the area to restrict any personnel from entering the area.

SECTION 6 - MAINTENANCE

6.1 INTRODUCTION

Service the product in accordance with the maintenance schedule on the following pages.

Wear all the protective clothing and personal safety devices issued to you or called for by job conditions.

DO NOT wear loose clothing or jewelry that can get caught on controls or moving parts.

Clean lubrication fittings before lubricating.

Intervals shown are for normal usage and conditions. Adjust intervals for abnormal usage and conditions.

Check all lubricant levels when lubricant is cool. For ease of filling hydraulic reservoir, use a funnel with a hose or flexible tube for best results.

When performing maintenance that requires accessing the top of the truck, use only an approved ladder.

Use only safe practices when maintaining this equipment. Always shut off the engine before reaching into pinch areas.

Place Do Not Operate Tags on the ignition switch and the steering wheel before attempting to perform any service or maintenance. Remove the key and disconnect battery leads.

⚠ WARNING

CUT/CRUSH/BURN HAZARD. Do not perform service or maintenance on the machine with the engine running, with the exception of the hydraulic return filter indicator checks.

⚠ WARNING

The vehicle hydraulic system operates at extremely high and potentially dangerous pressures. The operator must relieve any system pressure before disconnecting or removing and portion of the system.

6.2 MAINTENANCE AND LUBRICATION

The truck chassis itself is on a maintenance schedule recommended by the manufacturer. Follow these guidelines and protect your vehicle warranty.

There are a number of different lubricants used on your vehicle. The following Lubricant Chart shows the proper lubricant and the most common brands and specification which meet the requirements. Refer to Section 6.3.

The hydraulic filter located on the return side of the hydraulic tank comes equipped with restriction indicator gauges. The gauge shows the condition of the filter element. When the needle reaches the red band (25 psi), the filter is starting to bypass and the element needs to be changed. Failure to change the filter element will result in premature wear and/or failure of any or all of the hydraulic components. Only check gauge when hydraulic fluid is at operating temperature. Cold oil is more dense and will give a false indicator gauge reading. Refer to Section 6.6.

For all sling, strap, chain and lifting components refer to the manufacturer inspection and maintenance schedules.

6.3 OILS AND GREASES

The following oils and greases are suitable for use with the Jerr-Dan Vehicle.

Company	Product
HYDRAULIC OILS	
1. Shell	Spirax S4 TXM
2. Shell	Tellus S2 VX 32
3. Chevron	Clarity AW 46
4. Exxon	Univis N46
5. Mobil	Mobilfluid 424
6. Texaco	Rando HD 46
7. Kendall	AW 46
8. Citgo	Mystik AW 46
9. Amoco	AW 46
10. Conoco	Super
11. Mobil	DTE10 Excel 32 (for cold weather use below 20°F)
12. Conoco	AW Hydraulic Fluid MV 32 (for cold weather use below 20°F)
GREASES	
1. Drydene	HD Lithium EP2
2. Gulf	Crown EP2
3. Amoco	Amolith EP2
4. Shell	Alvania EP2
5. Texaco	Marfax EP2
6. Mobil	Mobilux EP2
7. Sunoco	Prestige EP2

Company	Product
WINCH	
Mobil	SAE 75W-90 Synthetic Gear Lube (or approved equivalent)
WIRE ROPE	
Mobile	Motor Oil (or other approved deep penetrating equivalent)

6.4 WIRE ROPE HANDLING AND INSPECTION

⚠ WARNING

Wire Rope WILL FAIL if worn-out, overloaded, misused, damaged, improperly maintained or abused.
Wire rope failure may cause serious injury or death!

Protect yourself and others:

- NEVER USE wire rope that is WORN-OUT, DAMAGED or ABUSED.
- NEVER OVERLOAD a wire rope.
- REFER TO APPLICABLE CODES, STANDARDS and REGULATIONS for INSPECTION REQUIREMENTS and REMOVAL CRITERIA.

A new wire rope requires a break in period. Run the wire rope through several cycles at low speeds gradually increasing the load on the wire rope. Drag another truck, forklift or other heavy object to induce a load on the wire rope. Make sure that the wraps of the wire rope are tight and evenly wound on the winch drum. A loose wire rope on the winch drum will cause crushing of the wire rope when heavy loads are applied.

All wire rope in continuous service should be observed during normal operation and visually inspected on a weekly basis. A complete and thorough inspection of all ropes in use must be made at least once a month and all rope which has been idle for a period of a month or more should be given a thorough inspection before it is put back into service. All inspections should be the responsibility of and performed by an appointed competent person with the training and experience to look for deterioration of the wire rope.

It is good practice, where the equipment is consistently in use, to give the rope a certain length of service, several hundred hours, several weeks or months and then renew the rope regardless of its condition. This method reduces the risk of fatigue causing a rope failure.

Any deterioration, resulting in a suspected loss of original rope strength, the wire rope should be replaced.

There are certain points along any given rope which should be given more attention than others, since some areas will be subjected to greater stresses, forces, and hazards. Some of these areas include at the winch drum, at the boom sheaves and at the end attachments.

The most common sign of rope deterioration and approaching failure is broken wires. Inspection criteria are specific as to the number of broken wires allowable under various circumstances. It is important that a diligent search be made for broken wires, particularly in critical areas. Inspection of wire rope ends should include hooks and thimbles.

Replace any wire ropes that have been abraded, crushed, kinked or twisted.

Wire rope should be routinely cleaned monthly of any and all debris. Grit and gravel can quickly reduce a wire ropes life. A wire rope should be well lubricated so that it can act and perform as it was designed. Lubrication keeps a wire rope flexible and free from rust.

Refer to the placard on your unit or consult the manufacturer or your local distributor for the proper replacement wire rope.

6.5 WIRE ROPE INSTALLATION

Proper Unreeling Procedures

Wire rope can be permanently damaged by improper unreeling or uncoiling practices. The majority of wire rope performance problems start here. Improper unreeling practices lead to premature rope replacement, hoisting problems and rope failure.

Place the payout reel as far away from the boom tip as is practical, moving away from the chassis. Never place the payout reel closer to the chassis than the boom point sheave. Doing so may introduce a reverse bend into the rope and cause spooling problems. Take care to determine whether the wire rope will wind over or under the drum before proceeding.

Unreeling & Uncoiling and Kinks

- **The Right Way To Unreel.** To unreel wire rope from a heavy reel, place a shaft through the center and jack up the reel far enough to clear the floor and revolve easily. One person holds the end of the rope and walks a straight line away from the reel, taking the wire rope off the top of the reel. A second person regulates the speed of the turning reel by holding a wood block against the flange as a brake, taking care to keep slack from developing on the reel, as this can easily cause a kink in the rope. Lightweight reels can be properly unreeled using a vertical shaft; the same care should be taken to keep the rope taut.

- **The Wrong Way To Unreel.** If a reel of wire rope is laid on its flange with its axis vertical to the floor and the rope unreeled by throwing off the turns, spirals will occur and kinks are likely to form in the rope. Wire rope always should be handled in a way that neither twists nor unlays it. If handled in a careless manner, reverse bends and kinks can easily occur.

- **The Right Way To Uncoil.** There is only one correct way to uncoil wire rope. One person must hold the end of the rope while a second person rolls the coil along the floor, backing away. The rope is allowed to uncoil naturally with the lay, without spiralling or twisting. Always uncoil wire rope as shown.

- **The Wrong Way To Uncoil.** If a coil of wire rope is laid flat on the floor and uncoiled by pulling it straight off, spirals will occur and kinking is likely. Torsions are put into the rope by every loop that is pulled off, and the rope becomes twisted and unmanageable. Also, wire rope cannot be uncoiled like hemp rope. Pulling one end through the middle of the coil will only result in kinking.

- **Kinks.** Great stress has been placed on the care that should be taken to avoid kinks in wire rope. Kinks are places where the rope has been unintentionally bent to a permanent set. This happens where loops are pulled through by tension on the rope until the diameter of the loop is only a few inches. They are also caused by bending a rope around a sheave having too severe a radius. Wires in the strands at the kink are permanently damaged and will not give normal service, even after apparent “restraightening.”

Drum Winding

When wire rope is wound onto a sheave or drum, it should bend in the manner in which it was originally wound. This will avoid causing a reverse bend in the rope. Always wind wire rope from the top of the one reel onto the top of the other. Also acceptable, but less so, is re-reeling from the bottom of one reel to the bottom of another. Re-reeling may also be done with reels having their shafts vertical, but extreme care must be taken to ensure that the rope always remains taut. It should never be allowed to drop below the lower flange of the reel. A reel resting on the floor with its axis horizontal may also be rolled along the floor to unreel the rope.

Wire rope should be attached at the correct location on a flat or smooth-faced drum, so that the rope will spool evenly, with the turns lying snugly against each other in even layers. If wire rope is wound on a smooth-face drum in the wrong direction, the turns in the first layer of rope will tend to spread apart on the drum. This results in the second layer of rope wedging between the open coils, crushing and flattening the rope as successive layers are spooled.

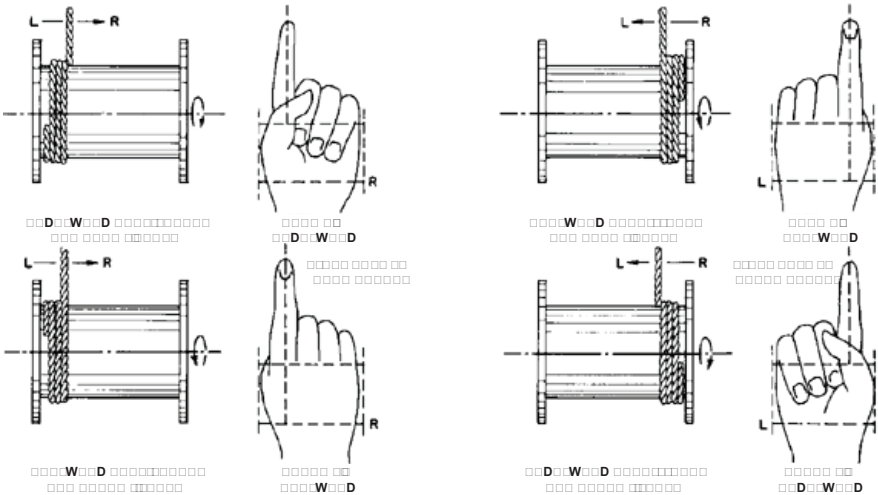

A simple method of determining how a wire rope should be started on a drum is shown above. The observer stands behind the drum, with the rope coming towards him. Using the right hand for right-lay wire rope, and the left hand for left lay wire rope, the clenched fist denotes the drum, the extended index finger the oncoming rope.

Keep Wraps Tight

The end of the rope must be securely and evenly attached to the drum anchorage point by the method recommended by the equipment manufacturer. At least five wraps of wire rope must remain on the drum as dead wraps when the rope is unwound during normal operations. Locate the dead end rope anchorage point on the drum in relation to the direction of the lay of the rope. Do not use an anchorage point that does not correspond with the rope lay. Mismatching rope lay and anchorage point will cause the wraps to spread apart from each other and allow the rope to cross over on the drum. Very gappy winding will occur resulting in crushing damage in multilayer applications.

Back tension must be continually applied to the payout reel and the crewman installing the rope must proceed at a slow and steady pace whether the drum is smooth or grooved. Regardless of the benefits of a grooved drum, tension must be applied to ensure proper spooling. An improperly installed rope on a grooved drum will wear just as quickly as an improperly installed rope on a smooth drum. If a wire rope is poorly wound and as a result jumps the grooves, it will be crushed and cut under operating load conditions where it crosses the grooves.

Every wrap on the first or foundation layer must be installed very tightly and be without gaps. Careless winding results in poor spooling and will eventually lead to short service life. The following layers of rope must lay in the grooves formed between adjacent turns of the preceding layer of rope. If any type of overwind or crosswinding occurs at this stage of installation and is not corrected immediately, poor spooling and crushing damage will occur.

On a multilayer spooling drum be sure that the last layer remains at least two rope diameters below the drum flange top. Do not use a longer length than is required because the excess wire rope will cause unnecessary crushing and may jump the flange. Loose wraps that occur at any time must be corrected immediately to prevent catastrophic rope failure.

The use of a mallet is acceptable to ensure tight wraps, however a steel-faced mallet should be covered with plastic or rubber to prevent damage to the rope wires and strands.

6.6 LUBRICATION CHARTS

The following lubrication charts are located inside the door of the tool compartment on the driver's side of the body.

124

LUBRICATION CHART

JERR-DAN® HPL™

WHEEL LIFT SYSTEM

INTERVAL (HOURS)	REF. NO.	IDENTIFICATION	SERVICE	LUBRICANT	NO. OF POINTS
50 OR MONTHLY	C	ADJ. KNOB	OIL	ENGINE OIL	2
	F	BOOM (FLY)	COAT	MPG	1
	N	MAGNETIC PLUG	CLEAN	———	1
	P	BOOM (FLY)	LUBE	MPG	1
100 OR BI-MONTHLY	A	GRID PIVOT	LUBE	MPG	1
	B	PLUNGER	LUBE	MPG	4
	D	EXT. CYLINDER	LUBE	MPG	2
	G	PIVOT TUBE	LUBE	MPG	4
	H	PIVOT PINS	LUBE	MPG	2
	J	PIVOT ARMS	LUBE	MPG	6
	K	TILT CYLINDER	LUBE	MPG	2
	L	LIFT CYLINDER	LUBE	MPG	3
	M	HYD. RESERVOIR	CHECK	●	1
	R	LATCH	LUBE	MPG	2
	S	ARM PIVOT	LUBE	MPG	2
	T	VALVE SPOOL	CLEAN & OIL	ENGINE OIL	7
250 OR SEMI-ANNUALLY	E	HYD. FILTER	CHANGE	———	1
1000 OR YEARLY	M	HYD. RESERVOIR	DRAIN-FILL	●	1

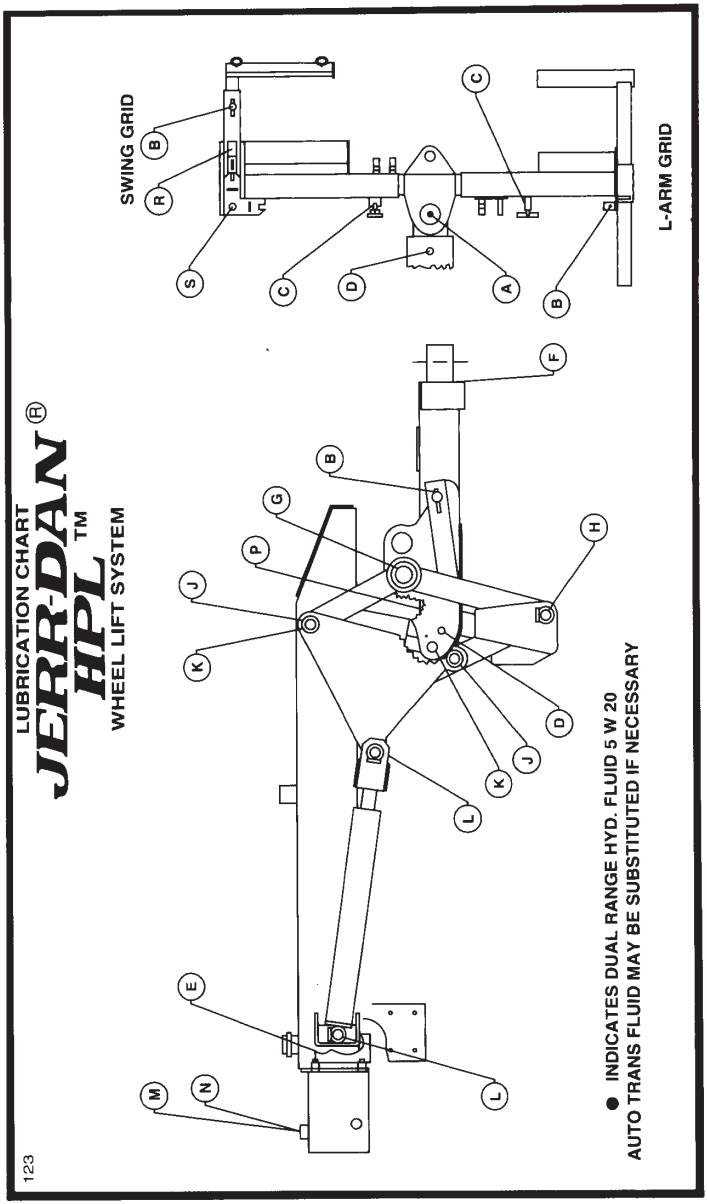
LUBRICATION CHART
JERR-DAN®
HPL™
WHEEL LIFT SYSTEM
123
SWING GRID
L-ARM GRID
● INDICATES DUAL RANGE HYD. FLUID 5 W 20
AUTO TRANS FLUID MAY BE SUBSTITUTED IF NECESSARY

126

LUBRICATION CHART

JERR-DAN® HPL™

WRECKER BOOM

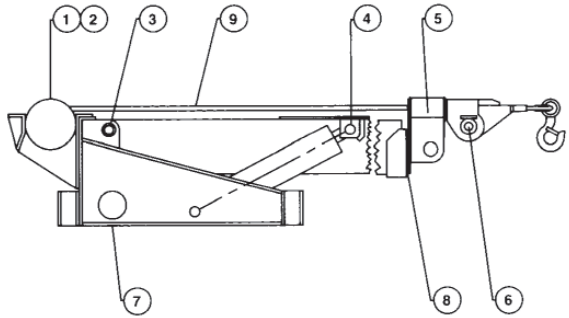

INTERVAL (HOURS)	REF. NO.	IDENTIFICATION	SERVICE	LUBRICANT	NO. OF POINTS
50 OR MONTHLY	9	CABLE	OIL	ENGINE OIL	1 or 2
	P	BOOM (FLY)	LUBE	MPG	1
	N	MAGNETIC PLUG	CLEAN	———	1
	F	BOOM (FLY)	COAT	MPG	1
	C	ADJ. KNOB	OIL	ENGINE OIL	2
100 OR BI-MONTHLY	1	WINCH	LUBE	MPG	1 or 2
	3	BOOM PIVOTS	LUBE	MPG	2
	4	LIFT CYLINDERS	LUBE	MPG	4
	5	SWIVEL	LUBE	MPG	1
	6	SHEAVE	LUBE	MPG	1 or 2
	7	VALVE SPOOLS	CLEAN & OIL	ENGINE OIL	3 of 4
	8	BOOM (FLY)	COAT	MPG	1
	T	VALVE SPOOL	CLEAN & OIL	ENGINE OIL	7
	S	ARM PIVOT	LUBE	MPG	2
	R	LATCH	LUBE	MPG	2
	M	HYD. RESERVOIR	CHECK	●	1
	L	LIFT CYLINDER	LUBE	MPG	3
	K	TILT CYLINDER	LUBE	MPG	2
	J	PIVOT ARMS	LUBE	MPG	6
	H	PIVOT PINS	LUBE	MPG	2
	G	PIVOT TUBE	LUBE	MPG	4
	D	EXT. CYLINDER	LUBE	MPG	2
	B	PLUNGER	LUBE	MPG	4
	A	GRID PIVOT	LUBE	MPG	1
250 OR SEMI-ANNUALLY	2	WINCH BOX	CHECK	GL5 #140	1 of 2
	E	HYD. FILTER	CHANGE	———	1
1000 OR YEARLY	2	WINCH BOX	DRAIN-FILL	GL5 #140	1
	M	HYD. RESERVOIR	DRAIN-FILL	●	1

● INDICATES DUAL RANGE HYD. FLUID 5 W 20
AUTO TRANS FLUID MAY BE SUBSTITUTED IF NECESSARY

125

LUBRICATION CHART

JERR-DAN® HPL™

DECK MOUNTED WINCH

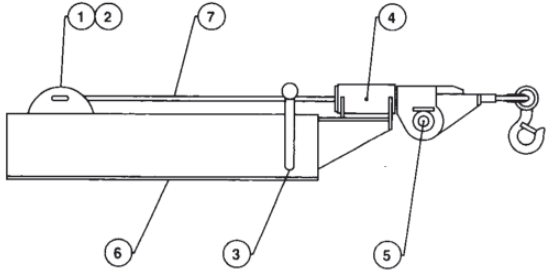

● INDICATES DUAL RANGE HYD. FLUID 5 W 20
AUTO TRANS FLUID MAY BE SUBSTITUTED IF NECESSARY

INTERVAL (HOURS)	REF. NO.	IDENTIFICATION	SERVICE	LUBRICANT	NO. OF POINTS
50 OR MONTHLY	3	HANDLES	OIL	ENGINE OIL	2
	7	CABLE	OIL	ENGINE OIL	1
	P	BOOM (FLY)	LUBE	MPG	1
	N	MAGNETIC PLUG	CLEAN	———	1
	F	BOOM (FLY)	COAT	MPG	1
	C	ADJ. KNOB	OIL	ENGINE OIL	2
100 OR BI-MONTHLY	1	WINCH	LUBE	MPG	1
	4	SWIVEL	LUBE	MPG	1
	5	SHEAVE	LUBE	MPG	1
	6	VALVE SPOOL	CLEAN & OIL	ENGINE OIL	1
	T	VALVE SPOOL	CLEAN & OIL	ENGINE OIL	7
	S	ARM PIVOT	LUBE	MPG	2
	R	LATCH	LUBE	MPG	2
	M	HYD. RESERVOIR	CHECK	●	1
	L	LIFT CYLINDER	LUBE	MPG	3
	K	TILT CYLINDER	LUBE	MPG	2
	J	PIVOT ARMS	LUBE	MPG	6
	H	PIVOT PINS	LUBE	MPG	2
	G	PIVOT TUBE	LUBE	MPG	4
	D	EXT. CYLINDER	LUBE	MPG	2
	B	PLUNGER	LUBE	MPG	4
	A	GRID PIVOT	LUBE	MPG	1
250 OR SEMI-ANNUALLY	2	WINCH BOX	CHECK	GL5 #140	1
	E	HYD. FILTER	CHANGE	———	1
1000 OR YEARLY	2	WINCH BOX	DRAIN-FILL	GL5 #140	1
	M	HYD. RESERVOIR	DRAIN-FILL	●	1

LUBRICATION POINTS

Note: *The following numbers and letters correspond to those shown on the lubrication charts on page 6-10, 6-11, 6-12 and 6-13.*

2. Winch Gear Case

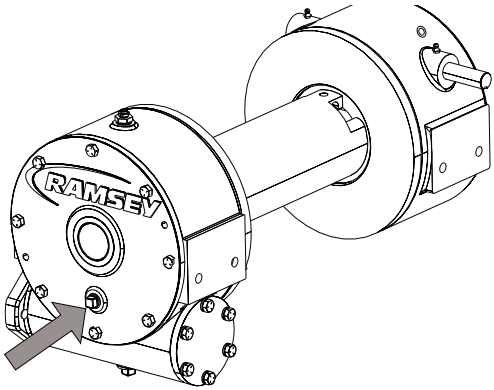

Lube Point(s) – Fill Plug
Lube – Reference winch manufacturer's manual.
Interval – Check level every 100 hours or bi-monthly
Change every 1000 hours

E. Hydraulic Reservoir Return Filter

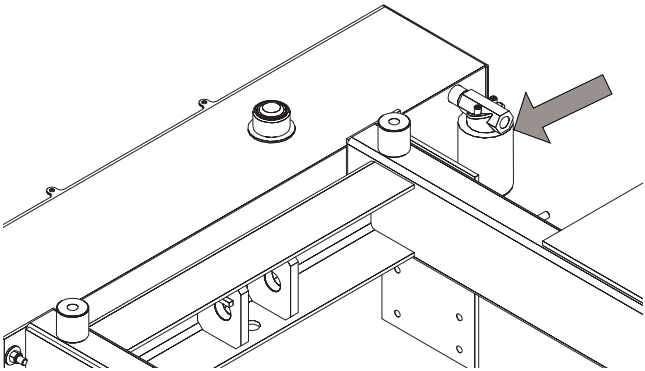

Lube Point(s) – Replaceable Element
Interval – Check level every 250 hours or semi-annually

M. Hydraulic Reservoir Oil Level

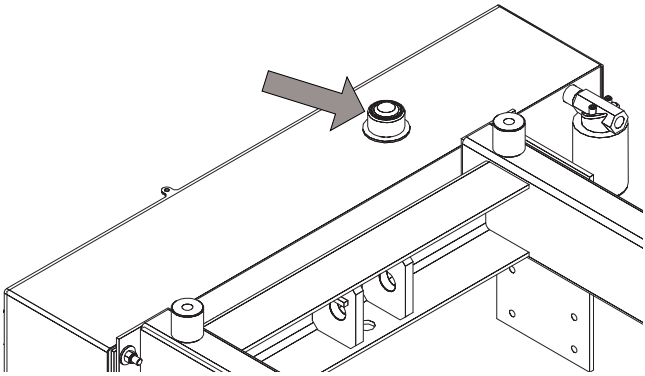

Lube Point(s) – Fill Cap
Interval – Check level every 100 hours or bi-monthly
Change every 1000 hours

N. Hydraulic Reservoir Magnetic Plug

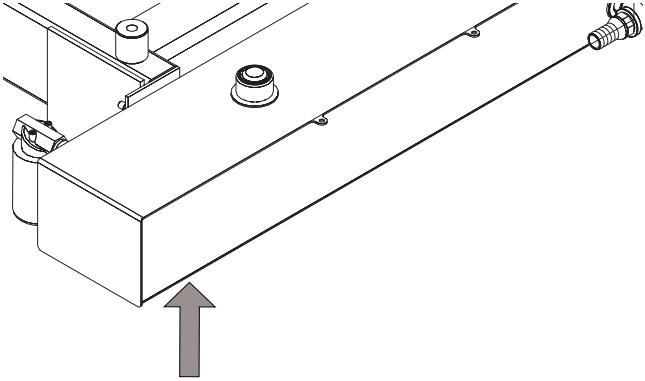

Lube Point(s) – Hydraulic Reservoir Magnetic Plug
Interval – Clean every 50 hours or monthly

6.7 TROUBLE SHOOTING

You probably won't require anything but preventive maintenance to keep your Jerr-Dan running, however, the following chart should help you isolate and correct minor problems if they occur with use. Any service work on the hydraulic system should be performed by qualified mechanics.

HYDRAULIC SYSTEM

Problem	Cause	Solution
Slow operation	a. Low engine RPM	a. Speed up engine
	b. Low oil level	b. Check level and fill with the specified oil
	c. Blocked or restricted hose	c. Inspect: remove blockage
	d. Dirty hydraulic oil	d. Drain, flush and refill with clean oil, replace filter
	e. Hydraulic pump worn	e. Rebuild or replace
	f. Frozen hydraulic lines	f. Thaw and remove water
Valve leaks	a. Defective seals	a. Inspect and replace
Cylinder leaks	a. Defective seals or rods	a. Inspect and replace
Erratic cylinder function	a. Air in the system	a. Cycle hydraulic system 10 to 15 times to remove air
	b. Defective pump (pulsating)	b. Replace if necessary
Remote hand controller fails to respond	a. Electric power turned off	a. Turn on CONTROL power switch in cab
Electric Control Switches fail to respond	a. Electric power turned off	a. Turn on CONTROL power switch in cab
	b. Electric circuit wiring	a. Check/repair electrical wiring circuit problem.

P.T.O. FUNCTIONING IMPROPERLY

Problem	Cause	Solution
Intermittent operation	a. Poor Electrical connection	a. Check electrical connections
Rattling noise in P.T.O.	a. P.T.O. backlash too loose (Consult P.T.O. Manual)	a. Shims must be removed
Howling noise in P.T.O.	a. P.T.O. backlash too tight (Consult P.T.O. Manual)	a. Shims must be added
Gear oil leak between P.T.O. and pump	a. Defective shaft seal	a. Remove and replace
P.T.O. will not engage or disengage	a. Electrical circuit wiring b. Solenoid Valve malfunctioning c. Blown fuse	a. Check/repair electrical wiring problem circuit. b. Repair or replace c. Replace fuse

HYDRAULIC PUMP

Problem	Cause	Solution
Pump noisy (Cavitation)	a. Low oil supply b. Thick oil c. Dirty oil filter d. Restriction in suction line e. Pump worn	a. Fill to proper level b. Fill with proper oil (See chart) c. Replace filter d. Clean out and remove e. Repair or replace
Pump slow or fails to respond	a. Low oil supply b. Cold Thick Oil	a. Fill to proper level b. Drain and refill with a low temperature oil
Oil heating up	a. Foreign material lodged in relief valve filter b. Using too light oil c. Dirty oil d. Oil level too low e. Pump worn (slippage)	a. Inspect and remove/replace b. Drain and refill with clean oil c. Drain, flush and refill with clean oil/replace filter d. Fill to proper level e. Repair or replace

HYDRAULIC PUMP

Problem	Cause	Solution
Oil foaming	a. Air leaking into suction line b. Wrong kind of oil c. Oil level too low	a. Tighten all connections b. Drain and refill with non-foaming type of hydraulic oil (See lube chart) Replace filter c. Refill to proper level
Hydraulic oil leak between P.T.O. and pump	a. Defective shaft seal	a. Replace shaft seal
Pump leaks at front and rear covers	a. Defective seals	a. Replace seals

WINCH FUNCTIONING IMPROPERLY

Problem	Cause	Solution
Winch screeches during operation	a. Insufficient lubrication	a. Lubricate per lube chart
Winch will not pull load or take in wire rope	a. Free-spooling device not engaged b. Sheared keys or broken coupling c. Hydraulic pump worn	a. Engage b. Inspect or replace c. Inspect and replace

REMOTE HAND CONTROLLER

Problem	Cause	Solution
Transmitter not working. .	a. Electric power turned off b. Discharged Battery c. Plug In Connection d. Receiver power turned off e. Out of range f. Communication error	a. Turn on CONTROL power switch in cab or control station b. Replace Battery c. Check connection d. Check receiver power input e. Make sure transmitter is in range of receiver f. Make sure transmitter and receiver are matched.
Poor Range	a. Discharged Battery b. Communication error c. Communication error	a. Replace Battery b. Obstructions, interference, and adverse weather can affect range c. Check receiver antenna and cable connections
Does not operate correctly	a. Communication error	a. Check/ Verify antenna Wiring

SECTION 7 - SPECIFICATIONS

7.1 PRODUCT SPECIFICATIONS

HPL-35

OPERATING SPECIFICATIONS AND PERFORMANCE DATA

DO NOT EXCEED THE FOLLOWING RATINGS:

8DMRW - DECK MOUNTED RECOVERY WINCH RATING:
- Winch Rating: .....8,000 lbs.
- Wire Rope:
  - Working Limit Each Line .....4,300 lbs.
  - Construction .....6 x 25 EIPS RRL IWRC
  - Diameter ..... 3/8 inch
  - Standard Length .....40 Feet

BOOM RATINGS: (SAE J2512 Rating)
- H408S:
  - Extended (Boom elevated at 30° Angle [2]).....2,500 lbs.
  - Retracted.....8,000 lbs.
  - Winch Rating:.....8,000 lbs.[2]
  - Wire Rope:
    - Working Limit Each Line .....4,300 lbs.
    - Construction .....6 x 25 EIPS RRL IWRC
    - Diameter ..... 3/8 inch
    - Standard Length .....101 Feet
- 0808S:
  - Extended (Boom elevated at 30° Angle [2]).....7,000 lbs.
  - Retracted.....18,500 lbs.
  - Winch Rating:.....8,000 lbs.[2]
  - Wire Rope:
    - Working Limit Each Line .....4,300 lbs.
    - Construction .....6 x 25 EIPS RRL IWRC
    - Diameter ..... 3/8 inch
    - Standard Length .....101 Feet
- 1210S:
  - Extended (Boom elevated at 30° Angle [2]).....8,000 lbs.
  - Retracted.....24,000 lbs.
  - Winch Rating:.....10,000 lbs.[2]
  - Wire Rope:
    - Working Limit Each Line .....5,800 lbs.
    - Construction .....6 x 25 EIPS RRL IWRC
    - Diameter .....7/16 inch
    - Standard Length .....101 Feet

1212S:
- Extended (Boom elevated at 30° Angle [2]).....8,000 lbs.
- Retracted.....24,000 lbs.
- Winch Rating:.....12,000 lbs.[2]
- Wire Rope:
  - Working Limit Each Line .....5,800 lbs.
  - Construction .....6 x 25 EIPS RRL IWRC
  - Diameter .....7/16 inch
  - Standard Length .....150 Feet

0808D:
- Extended (Boom elevated at 30° Angle [2]).....7,000 lbs.
- Retracted.....18,500 lbs.
- Winch Rating:.....8,000 lbs.[2]
- Wire Rope:
  - Working Limit Each Line .....4,300 lbs.
  - Construction .....6 x 25 EIPS RRL IWRC
  - Diameter ..... 3/8 inch
  - Standard Length .....101 Feet

1210D:
- Extended (Boom elevated at 30° Angle [2]).....8,000 lbs.
- Retracted.....24,000 lbs.
- Winch Rating:.....10,000 lbs.[2]
- Wire Rope:
  - Working Limit Each Line .....5,800 lbs.
  - Construction .....6 x 25 EIPS RRL IWRC
  - Diameter .....7/16 inch
  - Standard Length .....110 Feet

1212D:
- Extended (Boom elevated at 30° Angle [2]).....8,000 lbs.
- Retracted.....24,000 lbs.
- Winch Rating:.....12,000 lbs.[2]
- Wire Rope:
  - Working Limit Each Line .....5,800 lbs.
  - Construction .....6 x 25 EIPS RRL IWRC
  - Diameter .....7/16 inch
  - Standard Length .....150 Feet

UNDERLIFT RATING: “L” Arm Grid (Reference underlift serial number tag)
- Full Extended .....3,500 lbs.[1]
- Tow Rating .....7,500 lbs.[1]

UNDERLIFT RATING: “T-37” Pivoting Grid (Reference underlift serial number tag)
- Full Extended .....4,000 lbs.[1]
- Tow Rating .....7,500 lbs.[1]

UNDERLIFT RATING: Frame Forks (Reference underlift serial number tag)
Full Extended .....4,000 lbs.[1]
Tow Rating .....7,500 lbs.[1]

GROSS TRAILER WEIGHT .....3,000 Maximum Vertical Load

[1] SAE J2512: Surface Vehicle Recommended Practices - Towing Equipment Ratings and Practices

[2] SAE J706: Surface Vehicle Recommended Practices - Rating of Winches

MAXIMUM LIFTING CAPACITY - THE MAXIMUM LOAD THAT CAN BE LIFTED.

GROSS COMBINED WEIGHT RATING (GCWR) - THE VALUE SPECIFIED BY THE VEHICLE MANUFACTURER AS GCW.

GROSS TRAILER WEIGHT (GTW) - THE MAXIMUM TRAILER WEIGHT WITH LOAD.

GROSS COMBINED WEIGHT (GCW) - ACTUAL WEIGHT OF THE HPL VEHICLE AND RECOVERED VEHICLE INCLUDING EQUIPMENT, DRIVER, PASSENGER, FUEL AND PAYLOAD (EVERYTHING THAT MOVES WITH THE VEHICLE).

NOTE

These ratings apply to the structural design of the HPL only and may be limited by the axle rating and gross vehicle weight rating of the truck chassis.

The payload and towing capacity of any towing vehicle must meet the following:

- The actual payload on the towing vehicle must not exceed the posted rating and the towed vehicle load must not exceed the posted lift / towing ratings.
- The total weight of the towing vehicle (cab chassis, body, payload, driver, passenger(s), tools, fuel, etc.) and the towed vehicle load must not exceed the GVWR (Gross Vehicle Weight Rating) of the towing vehicle.
- The total weight of the towing vehicle and a towed vehicle load must be distributed so that each axle's GAWR (Gross Axle Weight Rating) is not exceeded.
- The total weight of the towing vehicle and towed vehicle (everything that moves with the towing vehicle) must not exceed the GCWR (Gross Combination Weight Rating) of the towing vehicle.

Staying within these ratings is necessary to maintain the safety and performance of the towing vehicle.

CHECK TRUCK MANUAL FOR SPECIFIC GVW & AXLE RATINGS. ALSO LOOK AT THE CERTIFICATION DECAL AFFIXED TO DRIVER'S SIDE DOOR JAMB, HINGE PILLAR OR LATCH POST AND THE STRUCTURAL CAPACITIES PLACARD ON THE UNIT.

HPL-60

OPERATING SPECIFICATIONS AND PERFORMANCE DATA

DO NOT EXCEED THE FOLLOWING RATINGS:

8DMRW - DECK MOUNTED RECOVERY WINCH RATING:
- Winch Rating: .....8,000 lbs.
- Wire Rope:
  - Working Limit Each Line .....4,300 lbs.
  - Construction .....6 x 25 EIPS RRL IWRC
  - Diameter ..... 3/8 inch
  - Standard Length .....40 Feet

BOOM RATINGS: (SAE J2512 Rating)
- H408S:
  - Extended (Boom elevated at 30° Angle [2]).....2,500 lbs.
  - Retracted.....8,000 lbs.
  - Winch Rating:.....8,000 lbs.[2]
  - Wire Rope:
    - Working Limit Each Line .....4,300 lbs.
    - Construction .....6 x 25 EIPS RRL IWRC
    - Diameter ..... 3/8 inch
    - Standard Length .....101 Feet
- 0808S:
  - Extended (Boom elevated at 30° Angle [2]).....7,000 lbs.
  - Retracted.....18,500 lbs.
  - Winch Rating:.....8,000 lbs.[2]
  - Wire Rope:
    - Working Limit Each Line .....4,300 lbs.
    - Construction .....6 x 25 EIPS RRL IWRC
    - Diameter ..... 3/8 inch
    - Standard Length .....101 Feet
- 1210S:
  - Extended (Boom elevated at 30° Angle [2]).....8,000 lbs.
  - Retracted.....24,000 lbs.
  - Winch Rating:.....10,000 lbs.[2]
  - Wire Rope:
    - Working Limit Each Line .....5,800 lbs.
    - Construction .....6 x 25 EIPS RRL IWRC
    - Diameter .....7/16 inch
    - Standard Length .....101 Feet

1212S:

Extended (Boom elevated at 30° Angle [2]).....8,000 lbs.
Retracted.....24,000 lbs.
Winch Rating:.....12,000 lbs.[2]
Wire Rope:
Working Limit Each Line .....5,800 lbs.
Construction .....6 x 25 EIPS RRL IWRC
Diameter .....7/16 inch
Standard Length .....150 Feet

0808D:

Extended (Boom elevated at 30° Angle [2]).....7,000 lbs.
Retracted.....18,500 lbs.
Winch Rating:.....8,000 lbs.[2]
Wire Rope:
Working Limit Each Line .....4,300 lbs.
Construction .....6 x 25 EIPS RRL IWRC
Diameter ..... 3/8 inch
Standard Length .....101 Feet

1210D:

Extended (Boom elevated at 30° Angle [2]).....8,000 lbs.
Retracted.....24,000 lbs.
Winch Rating:.....10,000 lbs.[2]
Wire Rope:
Working Limit Each Line .....5,800 lbs.
Construction .....6 x 25 EIPS RRL IWRC
Diameter .....7/16 inch
Standard Length .....110 Feet

1212D:

Extended (Boom elevated at 30° Angle [2]).....8,000 lbs.
Retracted.....24,000 lbs.
Winch Rating:.....12,000 lbs.[2]
Wire Rope:
Working Limit Each Line .....5,800 lbs.
Construction .....6 x 25 EIPS RRL IWRC
Diameter .....7/16 inch
Standard Length .....150 Feet

UNDERLIFT RATING: “L” Arm Grid (Reference underlift serial number tag)

Full Extended .....5,000 lbs.[1]
Tow Rating .....24,000 lbs.[1]

UNDERLIFT RATING: “T-37” Pivoting Grid (Reference underlift serial number tag)

Full Extended .....4,000 lbs.[1]
Tow Rating .....24,000 lbs.[1]

UNDERLIFT RATING: Frame Forks (Reference underlift serial number tag)
Full Extended .....6,000 lbs.[1]
Tow Rating .....24,000 lbs.

GROSS TRAILER WEIGHT .....3,000 Maximum Vertical Load

[1] SAE J2512: Surface Vehicle Recommended Practices - Towing Equipment Ratings and Practices

[2] SAE J706: Surface Vehicle Recommended Practices - Rating of Winches

MAXIMUM LIFTING CAPACITY - THE MAXIMUM LOAD THAT CAN BE LIFTED.

GROSS COMBINED WEIGHT RATING (GCWR) - THE VALUE SPECIFIED BY THE VEHICLE MANUFACTURER AS GCW.

GROSS TRAILER WEIGHT (GTW) - THE MAXIMUM TRAILER WEIGHT WITH LOAD.

GROSS COMBINED WEIGHT (GCW) - ACTUAL WEIGHT OF THE HPL VEHICLE AND RECOVERED VEHICLE INCLUDING EQUIPMENT, DRIVER, PASSENGER, FUEL AND PAYLOAD (EVERYTHING THAT MOVES WITH THE VEHICLE).

NOTE

These ratings apply to the structural design of the HPL only and may be limited by the axle rating and gross vehicle weight rating of the truck chassis.

The payload and towing capacity of any towing vehicle must meet the following:

- The actual payload on the towing vehicle must not exceed the posted rating and the towed vehicle load must not exceed the posted lift / towing ratings.
- The total weight of the towing vehicle (cab chassis, body, payload, driver, passenger(s), tools, fuel, etc.) and the towed vehicle load must not exceed the GVWR (Gross Vehicle Weight Rating) of the towing vehicle.
- The total weight of the towing vehicle and a towed vehicle load must be distributed so that each axle's GAWR (Gross Axle Weight Rating) is not exceeded.
- The total weight of the towing vehicle and towed vehicle (everything that moves with the towing vehicle) must not exceed the GCWR (Gross Combination Weight Rating) of the towing vehicle.

Staying within these ratings is necessary to maintain the safety and performance of the towing vehicle.

CHECK TRUCK MANUAL FOR SPECIFIC GVW & AXLE RATINGS. ALSO LOOK AT THE CERTIFICATION DECAL AFFIXED TO DRIVER'S SIDE DOOR JAMB, HINGE PILLAR OR LATCH POST AND THE STRUCTURAL CAPACITIES PLACARD ON THE UNIT.

TRUCK CHASSIS

OPERATING SPECIFICATIONS AND PERFORMANCE DATA

Refer to Final Stage Vehicle Manufacturer Label affixed to the Driver's Side Door Jam, Hinge Pillar or Latch Post of the cab chassis and the chassis manufacturer's manual.

MFG BY:_____
_____
DATE OF MFR:MO_____YR._____
GVWR:_____KG (_____LB)
GAWR-FRONT:
_____KG (_____LB)
WITH_____TIRES,
_____RIMS,@_____KPA
(_____PSI) COLD_____
GAWR-INTERMEDIATE(1):
_____KG (_____LB)
WITH_____TIRES,
_____RIMS,@_____KPA
(_____PSI) COLD_____
GAWR-INTERMEDIATE(2):
_____KG (_____LB)
WITH_____TIRES,
_____RIMS,@_____KPA
(_____PSI) COLD_____
GAWR-REAR:
_____KG (_____LB)
WITH_____TIRES,
_____RIMS,@_____KPA
(_____PSI) COLD_____

THIS VEHICLE HAS BEEN COMPLETED IN ACCORDANCE WITH THE PRIOR MANUFACTURERS' IVD, WHERE APPLICABLE.
THIS VEHICLE CONFORMS TO ALL APPLICABLE FEDERAL MOTOR VEHICLE SAFETY STANDARDS, [AND BUMPER AND THEFT PREVENTION STANDARDS, IF APPLICABLE] IN EFFECT IN:

MO._____YR._____
VEHICLE IDENTIFICATION NUMBER:
_____
VEHICLE TYPE:
_____

7.2 CAPACITIES

Hydraulic System

Operating Pressure .... 3000 psi max.

System Flow (PTO System) .....8 gpm @ 1000 RPM

System Flow (Clutch Pump System).....7 gpm @ 1000 RPM

System Capacity ..... 15 gal

Reservoir Capacity ....9 gal

Type of Oil (PTO System)

Ambient Temperature Above 20° F .....Shell Spirax S4 TXM

Ambient Temperature Below 20° F .....Shell Tellus S2 VX 32

Type of Oil (Clutch Pump System)

Light Weight Fluid .....Shell Tellus S2 VX 32

Serial Number _____

Date	Comments

Inspection, Maintenance and Repair Log

Date	Comments

JERR-DAN
An Oshkosh Corporation Company

TRANSFER OF OWNERSHIP

To Product Owner:

If you now own but ARE NOT the original purchaser of the product covered by this manual, we would like to know who you are. For the purpose of receiving safety-related bulletins, it is very important to keep Jerr-Dan Corporation updated with the current ownership of all Jerr-Dan products. Jerr-Dan maintains owner information for each Jerr-Dan product and uses this information in cases where owner notification is necessary.

Please use this form to provide Jerr-Dan with updated information with regard to the current ownership of Jerr-Dan products. Please return completed form to the Jerr-Dan Product Safety & Reliability Department via facsimile or mail to address as specified below.

Thank You,
Product Safety & Reliability Department
Jerr-Dan Corporation
13224 Fountainhead Plaza
Hagerstown, MD 21742
USA
Telephone: +1-717-485-6591
Fax: +1-301-745-3713

NOTE: Leased or rented units should not be included on this form.

Mfg. Model : _____

Serial Number : _____

Previous Owner : _____

Address : _____

_____

Country : _____ **Telephone : (_____)** _____

Date of Transfer : _____

Current Owner : _____

Address : _____

_____

Country : _____ **Telephone : (_____)** _____

Who in your organization should we notify?

Name : _____

Title : _____

THIS PAGE IS INTENTIONALLY LEFT BLANK

5376000248

JERR-DAN

13224 Fountainhead Plaza
Hagerstown, MD 21742
Phone (717) 597-7111

TOW SUPPORT by JERR-DAN

Phone (800) 926-9666

OSHKOSH™

www.jerrdan.com