JERR-DAN

Operation And Safety Manual

Original Instructions

Keep this manual with machine at all times.

60 TON INDEPENDENT HEAVY DUTY WRECKER

S/N 0230006119 to Present

5376000250

April 21, 2022

JERR-DAN

An Oshkosh Corporation Company

⚠ WARNING

Operating, servicing and maintaining this vehicle or equipment can expose you to chemicals including engine exhaust, carbon monoxide, phthalates, and lead, which are known to the State of California to cause cancer and birth defects or other reproductive harm. To minimize exposure, avoid breathing exhaust, do not idle the engine except as necessary, service your vehicle or equipment in a well-ventilated area and wear gloves or wash your hands frequently when servicing. For more information go to www.P65Warnings.ca.gov.

REVISION LOG

April 21, 2022 - 0 - Original Issue of Manual.

Read This First

This manual is a very important tool! Keep it with the machine at all times.

The purpose of this manual is to provide owners, users, and operators with the precautions and operating procedures essential for the safe and proper machine operation for its intended purpose.

Due to continuous product improvements, Jerr-Dan Corporation reserves the right to make specification changes without prior notification. Contact Jerr-Dan Corporation for updated information.

OPERATOR QUALIFICATIONS

The operator of the machine must not operate the machine until this manual has been read, training is accomplished and operation of the machine has been completed under the supervision of an experienced and qualified operator.

Operators of this equipment must possess a valid, applicable driver's license, be in good physical and mental condition, have normal reflexes and reaction time, good vision and depth perception and normal hearing. Operator must not be using medication which could impair abilities nor be under the influence of alcohol or any other intoxicant during the work shift.

In addition, the operator must read, understand and comply with instructions contained in the following material furnished with the equipment:

- This Operation & Safety Manual
- All instructional decals and plates
- Any optional equipment instructions furnished
- Commercial vehicle's Operation & Maintenance Manuals

The operator must also read, understand and comply with all applicable Employer, Industry and Governmental rules, standards and regulations.

MODIFICATIONS

Any modification to this machine must be approved by Jerr-Dan.

HAZARD CLASSIFICATION SYSTEM

SAFETY ALERT SYSTEM AND SAFETY SIGNAL WORDS

This is the Safety Alert Symbol. It is used to alert you to the potential personal injury hazards. Obey all safety messages that follow this symbol to avoid possible injury or death.

DANGER

Indicates an imminently hazardous situation. If not avoided, will result in serious injury or death. This decal will have a red background.

WARNING

Indicates a potentially hazardous situation. If not avoided, could result in serious injury or death. This decal will have an orange background.

CAUTION

Indicates a potentially hazardous situation. If not avoided, *may* result in minor or moderate injury. It may also alert against unsafe practices. This decal will have a yellow background.

NOTICE

Indicates information or a comply policy that relates directly or indirectly to the safety of the personnel or protection of property.

WARNING

This product must comply with all safety related bulletins. Contact Jerr-Dan Corporation or the local authorized representative for information regarding safety bulletins which may have been issued for this product.

NOTICE

Jerr-Dan Corporation sends safety related bulletins to the owner of record of this machine. Contact Jerr-Dan Corporation to ensure that the current owner of records are updated and accurate.

NOTICE

Jerr-Dan Corporation must be notified immediately in all instances where Jerr-Dan product have been involved in an accident involving bodily injury or death of personnel or when substantial damage has occurred to personal property on the Jerr-Dan product.

FOR:

- Accident Reporting and Product Safety Publications
- Current Owner Updates
- Questions Regarding Product Applications and Safety
- Standards and Regulations Compliance Information
- Questions Regarding Product Modifications

CONTACT:

Product Safety and Reliability Department
Jerr-Dan Corporation
13224 Fountainhead Plaza
Hagerstown, MD 21742
USA

or Your Local Jerr-Dan Office

In USA
Toll Free: 1-877-554-7233

Outside USA
Phone: 240-420-2661
Fax: 301-745-3713

E-mail
ProductSafety@JerrDan.com

REPORTING SAFETY DEFECTS

If you believe that your vehicle has a defect which could cause a crash or could cause injury or death, you should immediately inform the National Highway Traffic Safety Administration (NHTSA) in addition to notifying Jerr-Dan Corporation.

If NHTSA receives similar complaints, it opens an investigation, and if it finds that a safety defect exists in a group of vehicles, it may order a recall and remedy campaign. However, NHTSA cannot become involved in individual problems between you, your dealer, or Jerr-Dan Corporation.

To contact NHTSA, you may call the Vehicle Safety Hotline toll-free at 1-888-327-4236 (TTY: 1-800-424-9153); go to http://www.safercar.gov; or write to:

Administrator
NHTSA
400 Seventh Street S.W.
Washington, DC 20590

You can also obtain other information about motor vehicle safety from http://www.safercar.gov.

THIS PAGE IS INTENTIONALLY LEFT BLANK

TABLE OF CONTENTS

Revision Log

Operator Qualifications....b
Modifications....b
Hazard Classification System....c
Safety Alert System and Safety Signal Words....c
Reporting Safety Defects....e

Table Of Contents

Section 1 - General Safety Practices

1.1 General....1-1
1.2 Pre-Operaton....1-2
Operator Training and Knowledge....1-2
Electrical Hazards....1-3
Crush and Collision Hazards....1-4
Winch Cable / Falling Load Hazards....1-5
Uncontrolled Towed Load Hazards....1-6
Tip-Over Hazards....1-7
Fall Hazards....1-7
Chemical Hazards....1-8
Battery Hazards....1-9
Personal Protective Equipment....1-9
Weather Conditions....1-10
Vehicle Equipment Damage....1-10

Section 2 - Pre-Operation And Inspection

2.1 Pre-Operation Check And Inspection....2-1
2.2 Decals....2-2
Three Stage Wrecker Boom Mid Section....2-6
Three Stage Wrecker Boom Fly Section....2-6
Right Hand - Control Decal Locations....2-7
Left Hand - Control Decal Locations....2-8
2.3 Walk-Around Inspection....2-9
2.4 Operational Checks....2-13
Operational Check....2-13

Section 3 - Controls & Indicators

3.1 General....3-1
3.2 Controls....3-2
Left Hand - Side Control Station....3-2
Right Hand - Side Control Station....3-2
3.3 Controls - In-Body Switch Panels....3-4
3.4 6 Function Hand Controller....3-7
3.5 Hand Controller - Portable Control Unit/Transmitter (PCU)....3-8
3.7 In-Cab Controller....3-17
3.6 14 Function Hand Controller....3-15

Section 4 - Operation

4.1 Underlift Operation....4-1
4.2 Various Positions For Lift Receiver Use....4-3
4.3 Underlift Attachments Supplied With The JD60 INDL....4-4
4.4 Spring Lift Brackets....4-5
4.5 Frame Forks....4-8
4.6 Chain Hook Adapters....4-11
4.7 Heavy Duty Tire Lift (Optional)....4-14
4.8 Trailer 5th Wheel Plate And Pintle Hook Ball Hitch Adapter (Optional)....4-19
4.9 Rear Hydraulic Outriggers/Spades....4-21
4.10 Integral Spades....4-22
4.11 Use Of The Load Chart....4-24
Load Indicator Locations....4-24
Sample Load Chart....4-25
Example....4-26
4.12 Wrecker Boom Operation....4-27
4.13 Shut Down For Travel....4-32

Section 5 - Emergency Procedures

5.1 Lowering/Retracting Of The Wrecker Boom....5-1
5.2 Raising/Lowering/Retracting/Folding/ Tilting Of The Underlift Boom....5-2
5.3 Raising/Retracting Of The Outrigger/Spades....5-3

Section 6 - Maintenance

Introduction....6-1
6.1 Maintenance And Lubrication....6-2
6.2 Fastener Torque Specifications....6-3
6.3 Oils And Greases....6-4
6.4 Wire Rope Handling And Inspection....6-6
6.5 Wire Rope Installation....6-8
6.6 JD60 IND Lubrication Points....6-11
JD60 IND Lubrication Points....6-12
JD60 IND Lubrication Points....6-13
6.7 Truck Battery Locations....6-16
6.8 Trouble Shooting....6-17
Hydraulic System....6-17
P.T.O. Functioning Improperly....6-18
Hydraulic Pump....6-18
Winch Functioning Improperly....6-19
Remote Hand Controller....6-20

Section 7 - Specifications

7.1 Product Specifications....7-1
JD60 IND....7-1
Truck Chassis....7-4
7.2 Capicities....7-5

Index

Transfer Of Ownership

THIS PAGE IS INTENTIONALLY LEFT BLANK

SECTION 1 - GENERAL SAFETY PRACTICES

1.1 GENERAL

This section outlines the necessary precautions for proper and safe machine operation and maintenance. For proper machine use, it is mandatory that a daily routine is established based on the content of this manual. A maintenance program, using the information provided in this manual must also be established by a qualified person and followed to ensure the machine is safe to operate.

The owner/user/operator of the machine must not operate the machine until this manual has been read, training is accomplished, and operation of the machine has been completed under the supervision of an experienced and qualified operator.

There may be times your truck my be exposed to direct contact with the public such as parades, charitable fundraisers, etc. Before allowing anyone other than a trained and experienced employee of your company near your truck, you should consult with your company safety officer and plan for safety.

If there are any questions with regard to safety, training, inspection, maintenance, application, and operation, please contact Jerr-Dan Corporation.

⚠ WARNING

Failure to comply with the safety precautions listed in this manual could result in machine damage, property damage, personal injury or death.

1.2 PRE-OPERATION

OPERATOR TRAINING AND KNOWLEDGE

- Read and understand this manual before operating the machine.

- Do not operate this machine until complete training is performed by authorized persons.
- Only authorized and qualified personnel can operate the machine.
- Read, understand, and obey all DANGERS, WARNINGS, CAUTIONS, and operating instructions on the machine and in the manual.
- Use the machine in a manner which is within the scope of its intended application set by Jerr-Dan.
- All operating personnel must be familiar with the emergency operation of the machine as specified in this manual.
- Read, understand, and obey all applicable employer, local, and government regulations as they pertain to the operation of the machine.

ELECTRICAL HAZARDS

- This machine is not insulated and does not provide protection from contact or being near electrical current. This includes lightning and lightning strikes.
- NEVER operate the machine in an area where overhead power lines, overhead or underground cables, or other power sources may exist without ensuring the appropriate power utility company de-energizes the lines.
- Always check for power lines before raising the boom.
- Look up and use light to search for power lines in the dark.
- Allow for machine movement and electrical line swaying.
- Do not step off or touch a charged vehicle.
- Maintain a clearance of at least 10 ft. (3m) between any part of the machine from any electrical line or apparatus carrying up to 50,000 volts. Refer to the Minimum Approach Distance (MAD) chart. One foot additional clearance is required for every additional 30,000 volts or less.

Minimum Approach Distance (M.A.D.)

Voltage Range (Phases to Phase)	**MINIMUM APPROACH DISTANCE in Feet (Meters)**
0 to 50KV	10 (3)
Over 50KV to 200KV	15 (5)
Over 200KV to 350KV	20 (6)
Over 350KV to 500KV	25 (8)
Over 500KV to 750KV	35 (11)
Over 750KV to 1000KV	45 (14)
NOTE: This requirement shall apply except where employer, local or government regulations are more stringent.	

- The minimum approach distance may be reduced if insulating barriers are installed to prevent contact, and the barriers are rated for the voltage of the line being guarded. These barriers shall not be part of (or attached to) the truck. The minimum approach distance shall be reduced to a distance within the designed working dimensions of the insulating barrier. This determination shall be made by a qualified person in accordance with the employer, local, or governmental requirements for work practices near energized equipment.

⚠ DANGER

DO NOT MANEUVER TRUCK OR PERSONNEL INSIDE PROHIBITED ZONE (MAD). ASSUME ALL ELECTRICAL PARTS AND WIRING ARE ENERGIZED UNLESS KNOWN OTHERWISE.

CRUSH AND COLLISION HAZARDS

- Keep clear of all outriggers.
- Never extend or retract outrigger unless it is in full view.

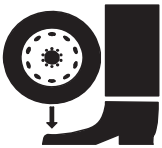

- Check under each wheel of the truck prior to retraction of outriggers to ensure all body parts are clear of wheels.
- Always use jack stands to support the boom and/or underlift before working underneath a lifted load.
- Warn personnel not to work, stand, or walk under a raised boom or underlift. Position barricades if necessary.
- Lower boom to stowed position prior to driving machine.
- Be aware of height clearances when traveling.

- Look out for and avoid other personnel, machinery, vehicles and obstructions in the area when driving the truck. Use a spotter if you DO NOT have a clear view.

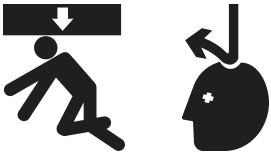

When opening body compartments:

- Loose items may shift during transport, ensure to properly secure items when not in use
- Slide drawer(s) open slowly.
- Ensure all compartment doors are properly closed prior to transport.

WINCH CABLE / FALLING LOAD HAZARDS

- Keep people away during operation.
- Never exceed capacity of rigging or cable.
- Never stand on or straddle cable.
- Always keep a minimum of five (5) wraps of cable on winch drum.
- Keep tension on cable when unwinding.

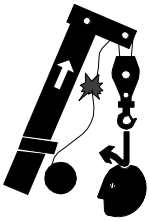

- Always stop operation before block contacts sheave.
- If block contacts sheave, lower load by letting out cable and inspect for damage.
- Keep cables from contacting sharp objects.
- Never wrap cables around objects. Use appropriate chains/straps to wrap around the vehicle to be recovered, and attach the cable hook to the chain/straps.

- Never allow the cable to cross over itself when wrapping on the drum.
- All boom placement functions should be made with the winch wire ropes set in “free spool” to avoid over tensioning or breaking the winch wire ropes.
- Never use damaged cable. Never use cable menders. Replace damaged cable. Use cable and hooks with equal or greater rating.

- Keep hands away from cable and drum during operation.

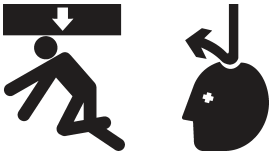

- Never operate recovery equipment with people under load.
- Jog winch clutch before pulling. Keep winch clutch engaged while the cable is loaded.
- Approved head gear must be worn during recovery operations.

UNCONTROLLED TOWED LOAD HAZARDS

- DO NOT exceed GAWR’s or GCWR of the chassis.
- Set parking brake and chock wheels of the recovery vehicle when **connecting** casualty vehicle.
- Use two (2) safety chains and two (2) tie down chains.
- Release parking brake of casualty vehicle prior to moving.
- Check chain tension periodically while in transit.

- Always retract underlift as close as possible.
- Ensure safety chains are properly attached from recovery vehicle to casualty vehicle.
- Attach auxiliary D.O.T. towing lights to the casualty vehicle.
- If towing a vehicle from the rear, ensure vehicle steering wheel is properly locked.
- Use proper size towing forks.
- Tow casualty vehicle on undamaged wheels/tires only.
- Retighten the tie-down straps during a tow as the tires settle into the grid from towing.

TIP-OVER HAZARDS

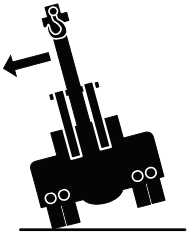

- Set up on firm surface only.
- Deploy rear outrigger/spades onto proper firm surface.
- Ensure truck is level prior to any boom operations.

FALL HAZARDS

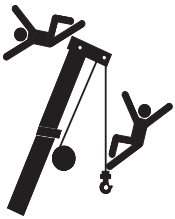

- Never use wrecker boom to hoist personnel.
- Never ride on boom, hook, load or any other device attached to wrecker boom or load line.
- DO NOT carry riders outside the cab. Riders could fall off the machine.

- Do not climb on the truck to access elevated service points. Only use approved ladders or grab handles and steps provided on the rear of the unit when accessing the service points on the top of the truck body in a controlled service environment. Always maintain 3-point contact, using two hands and one foot or two feet and one hand, when mounting or dismounting. These surfaces can become slippery, ensure to keep them and footwear clean and free of debris.

CHEMICAL HAZARDS

Exhaust Fumes

- DO NOT operate machine in an enclosed area without proper ventilation.
- DO NOT operate the machine in hazardous environments unless approved for that purpose by Jerr-Dan and site owner. Sparks from the electrical system and the engine exhaust can cause an explosion.

Flammable Fuel

- DO NOT fill the fuel tank or service the fuel system near an open flame, sparks or smoking materials. Engine fuel is flammable and can cause a fire and/or explosion.

Hydraulic Fluid

- DO NOT attempt to repair or tighten any hydraulic hoses or fittings while the engine is running or when the hydraulic system is under pressure.
- Stop engine and relieve trapped pressure. Fluid in the hydraulic system is under pressure and can penetrate the skin.
- DO NOT use your hand to check for leaks. Use a piece of cardboard or paper to search for leaks. Wear gloves to protect hands from spraying fluid.

BATTERY HAZARDS

- Battery fluid is highly corrosive. Avoid contact with skin and clothing at all times.
- Keep sparks, flames, and lighted materials away from batteries.
- Charge batteries only in a well ventilated area.
- Wear proper eye protection when servicing battery.

PERSONAL PROTECTIVE EQUIPMENT

- Use personal protective equipment when working on or around this vehicle.
- Remove rings, watches, jewellery, neckwear or other items that can catch in equipment.
- Wear :
  - o Snug fitting and sturdy long-sleeve shirt and long pants. Avoid loose fitting clothes.
  - o Sturdy gloves.
  - o Approved eye protection.
  - o Steel toed boots.
  - o Approved head gear.
  - o Approved hearing protection.

WEATHER CONDITIONS

- Be aware of the wind conditions. Wind may cause load to swing or shifting of load.
- If using in freezing conditions, you must be alert to possibility of ice forming on the device. Use Caution when extending and retracting winch cables, boom, and underlift. In addition use caution when opening/closing body panels
- Hydraulic cylinders are subject to thermal expansion and contraction. This may result in changes to the boom and/or attachment position while the machine is stationary. Factors affecting thermal movement can include the length of time the machine is stationary, hydraulic oil temperature, ambient air temperature and boom and/or attachment.

VEHICLE EQUIPMENT DAMAGE

The act of lifting and towing casualty vehicles that have often been involved in a crash offers many opportunities to inflict worse damage on the towed vehicle, or even damage to the recovery vehicle. Recovery operators should take great care to avoid this damage. Follow these guidelines to reduce the potential for equipment damage.

- Ensure vehicle is positioned in an area free from overhead obstructions. Keep a safe working distance from overhead power lines, bridges, road signs and other objects.
- Avoid retracting or extending the wrecker boom while under load.
- Do not tow a vehicle on its drive wheels unless steps have been taken to protect its transmission and differential. Follow the recommendations of the vehicle manufacturer or use a towing dolly.
- Never attach the chain hooks in such a way as to damage brake lines or other functional parts.
- Ensure proper ground clearance of the underlift boom when traveling. Keep the underlift boom raised high enough off the ground when roading to avoid dragging it over road surfaces.
- Do not move the recovery vehicle while rear hydraulic stabilizers are extended.
- Outrigger spades may damage paved surfaces.

- **Do not use machine as a ground when performing any welding operations.**
- Never tie down the front of the recovery vehicle. This procedure may place excessive load on the chassis frame or other structural components leading to damage and costly repairs.
- Don’t travel with the PTO engaged. Damage to the recovery vehicles transmission and hydraulic components will occur. Engage the PTO only when operating the hydraulic controls.
- When using stabilizer pads on pavement or concrete, it is suggested that you use larger rubber or wood pads under the stabilizer pads to help distribute the heavy loads. Damage to the pavement or concrete may result.
- The tire lift and grid tubes must be in their outermost positions for storage on the under lift when folded up in the travel position to avoid damage to the body.

THIS PAGE IS INTENTIONALLY LEFT BLANK

SECTION 2 - PRE OPERATION AND INSPECTION

2.1 PRE-OPERATION CHECK AND INSPECTION

Note: Complete all required maintenance before operating unit.

⚠ WARNING

FALL HAZARD. Use extreme caution when checking items beyond your normal reach. Use an approved ladder.

The pre-operation check and inspection, performed at beginning of each work shift or at each change of operator, should include the following:

1. **Cleanliness** - Check all surfaces for leakage (oil, fuel or battery fluid) or foreign objects. Report any leakage to the proper maintenance personnel.

2. **Structure** - Inspect the machine structure for dents, damage, weld or parent metal cracks or other discrepancies.

3. **Safety Decals Placards** - Ensure all safety decals are legible and in place. Clean or replace as required. See page 2-2 for details.

4. **Operation and Safety Manual(s)** - Operation & Safety Manual(s) are in cab.

5. **Walk-Around Inspection** - See page 2-8 for details.

6. **Fluid Levels** - Check fluids, including fuel, hydraulic oil, engine oil, transmission fluid and coolant. When adding fluids, refer to Section 6 - Lubrication and Maintenance and Section 7 - Specifications to determine proper type and intervals. Before removing filler caps or fill plugs, wipe all dirt and grease away from the ports. If dirt enters these ports, it can severely reduce component life.

7. **Attachments/Accessories** - Inspect all attachments for dents, damage, weld or parent metal cracks or other discrepancies. Inspect tie-down straps for cuts, frays or tears. Inspect chains for weld or parent metal cracks or other discrepancies.

8. **Operational Check** - Once the walk-around inspection is complete, perform a warm-up and operational check (see page 2-12) of all systems in an area free of overhead and ground level obstructions. See Section 3 - Controls and Indicators for more specific operating instructions.

⚠ WARNING

If your HDL does not operate properly, immediately bring machine to a stop, lower boom to ground and stop the engine. Determine cause and correct before continued use.

2.2 DECALS

Ensure all **DANGER**, **WARNING, CAUTION** and instructional decals and proper capacity charts are legible and in place. Clean and replace as required.

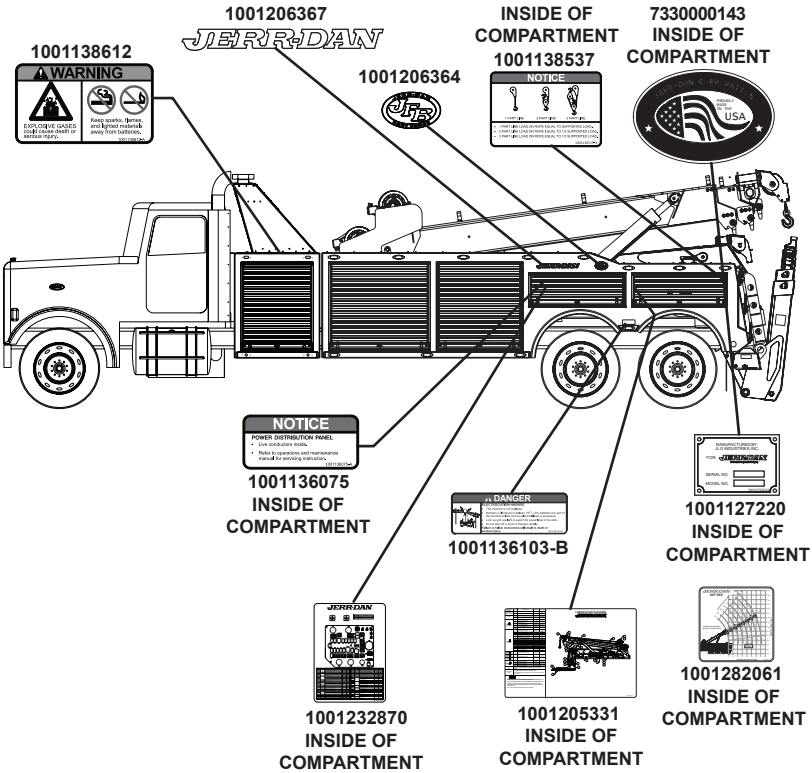

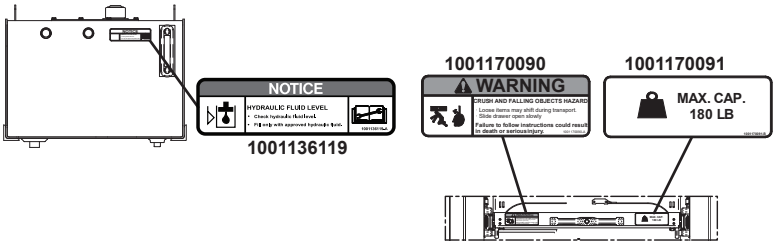

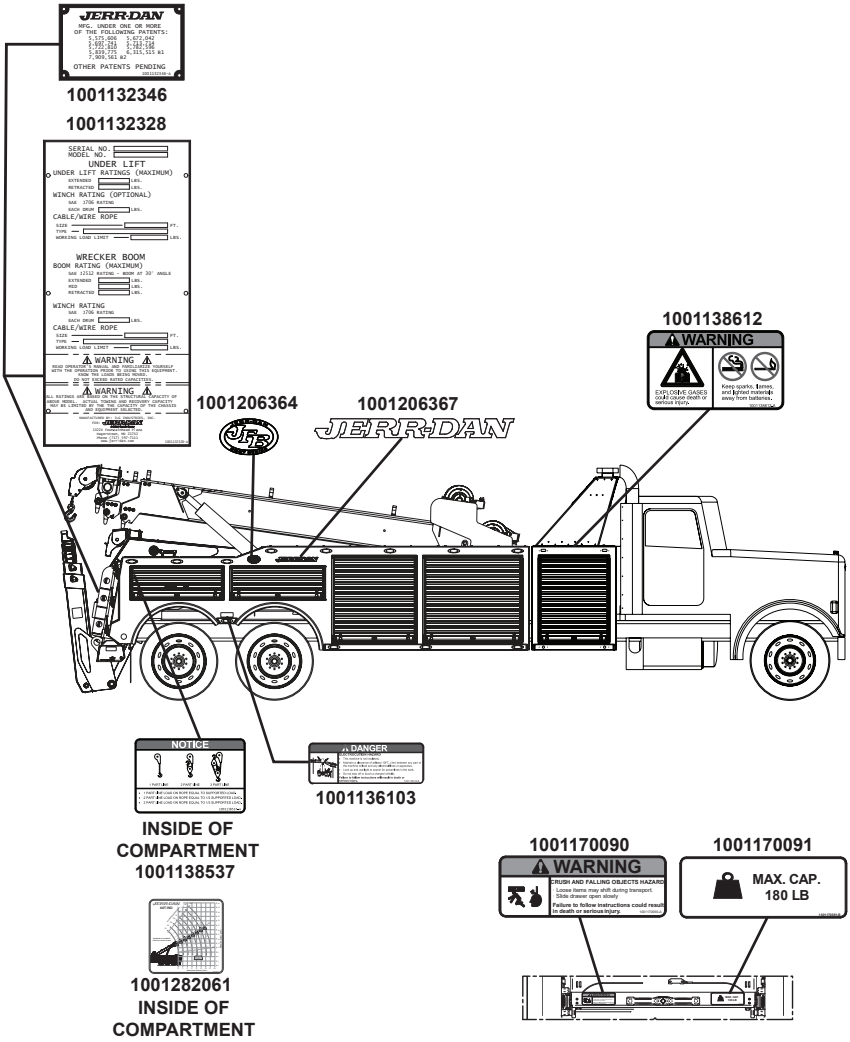
JERR-DAN
MFG. UNDER ONE OR MORE OF THE FOLLOWING PATENTS:
OTHER PATENTS PENDING
1001132346
1001132328
SERIAL NO.
MODEL NO.
UNDER LIFT
UNDER LIFT RATINGS (MAXIMUM)
WINCH RATING (OPTIONAL)
CABLE/WIRE ROPE
WRECKER BOOM
BOOM RATING (MAXIMUM)
WARNING
1001138612
WARNING
EXPLOSIVE GASES could cause death or serious injury.
Keep sparks, flames, and lighted materials away from batteries.
1001206364
1001206367
JERR-DAN
NOTICE
DANGER
1001136103
INSIDE OF COMPARTMENT
1001138537
1001170090
1001170091
WARNING
CRUSH AND FALLING OBJECTS HAZARD
Loose items may shift during transport.
Slide drawer open slowly
Failure to follow instructions could result in death or serious injury.
MAX. CAP.
180 LB
1001282061
INSIDE OF COMPARTMENT

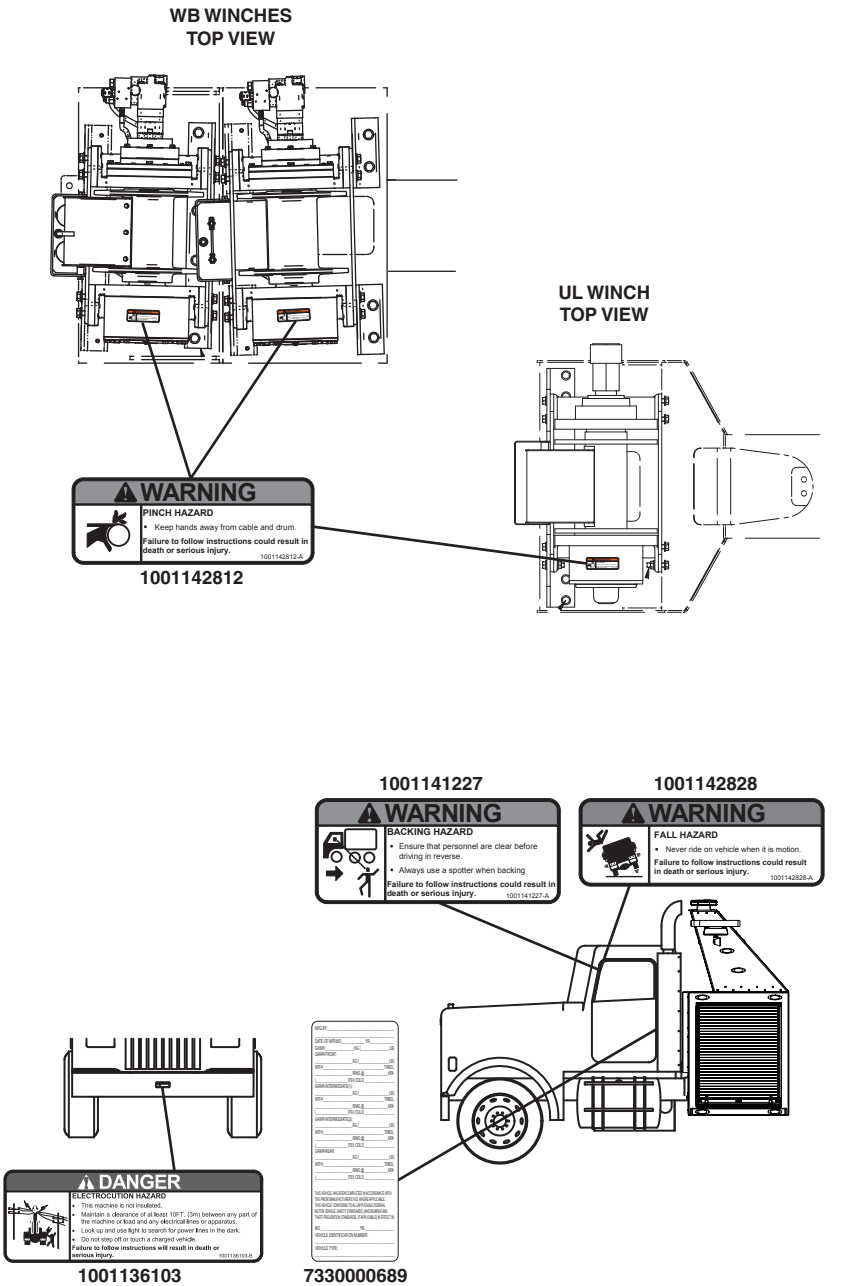
WB WINCHES
TOP VIEW
UL WINCH
TOP VIEW
WARNING
PINCH HAZARD
• Keep hands away from cable and drum.
Failure to follow instructions could result in death or serious injury.
1001142812-A
1001142812
1001141227
WARNING
BACKING HAZARD
• Ensure that personnel are clear before driving in reverse.
• Always use a spotter when backing
Failure to follow instructions could result in death or serious injury.
1001141227-A
1001142828
WARNING
FALL HAZARD
• Never ride on vehicle when it is motion.
Failure to follow instructions could result in death or serious injury.
1001142828-A
DANGER
ELECTROCUTION HAZARD
• This machine is not insulated.
• Maintain a clearance of at least 10FT. (3m) between any part of the machine or load and any electrical lines or apparatus.
• Look up and use light to search for power lines in the dark.
• Do not step off or touch a charged vehicle.
Failure to follow instructions will result in death or serious injury.
1001136103-B
1001136103
7330000689

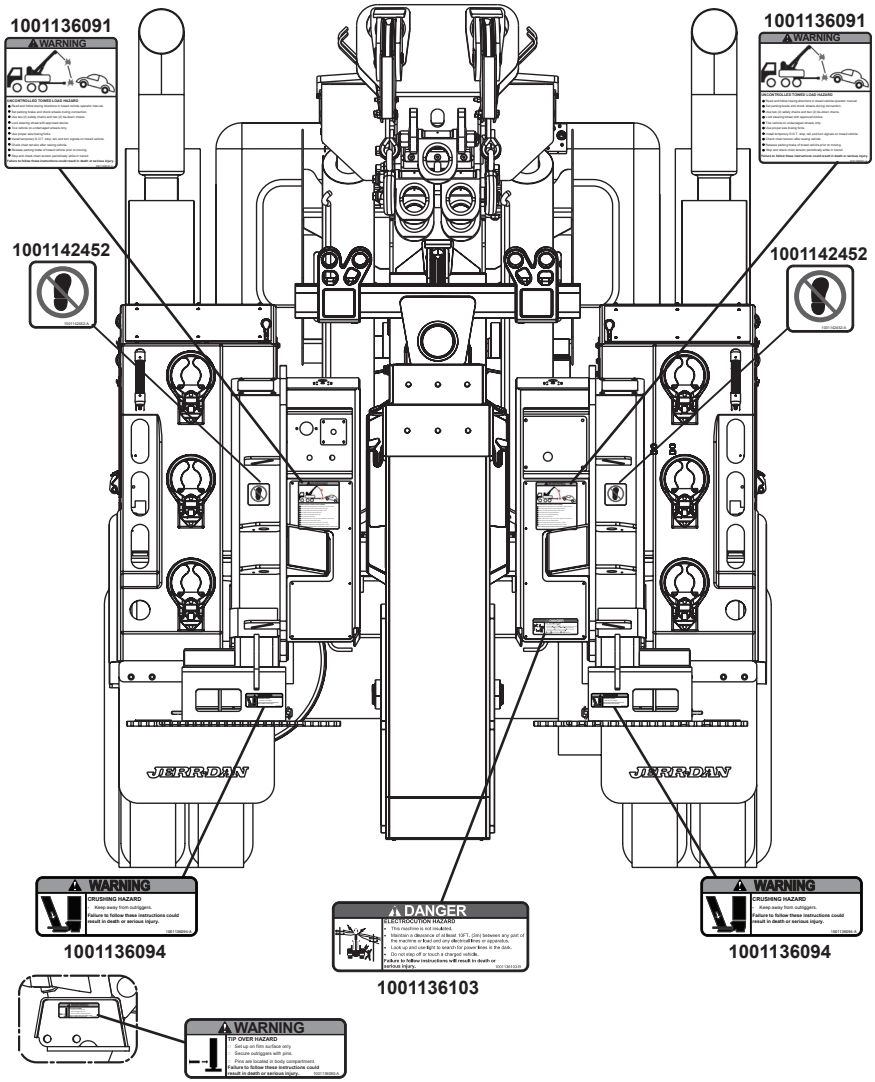
1001136091
WARNING
UNCONTROLLED TOWED LOAD HAZARD
1001136091
WARNING
UNCONTROLLED TOWED LOAD HAZARD
1001142452
1001142452
JERR-DAN
JERR-DAN
WARNING
CRUSHING HAZARD
Keep away from outriggers.
Failure to follow these instructions could result in death or serious injury.
1001136094
DANGER
ELECTROCUTION HAZARD
This machine is not insulated.
Maintain a clearance of at least 10FT. (3m) between any part of the machine or load and any electrical lines or apparatus.
Look up and use light to search for power lines in the dark.
Do not step off or touch a charged vehicle.
Failure to follow instructions will result in death or serious injury.
1001136103
WARNING
CRUSHING HAZARD
Keep away from outriggers.
Failure to follow these instructions could result in death or serious injury.
1001136094
WARNING
TIP OVER HAZARD
Set up on firm surface only.
Secure outriggers with pins.
Pins are located in body compartment.
Failure to follow these instructions could result in death or serious injury.
1001136080
WARNING
PINCH AND CRUSH HAZARDS
1001137169
BOTH SIDES

THREE STAGE WRECKER BOOM MID SECTION

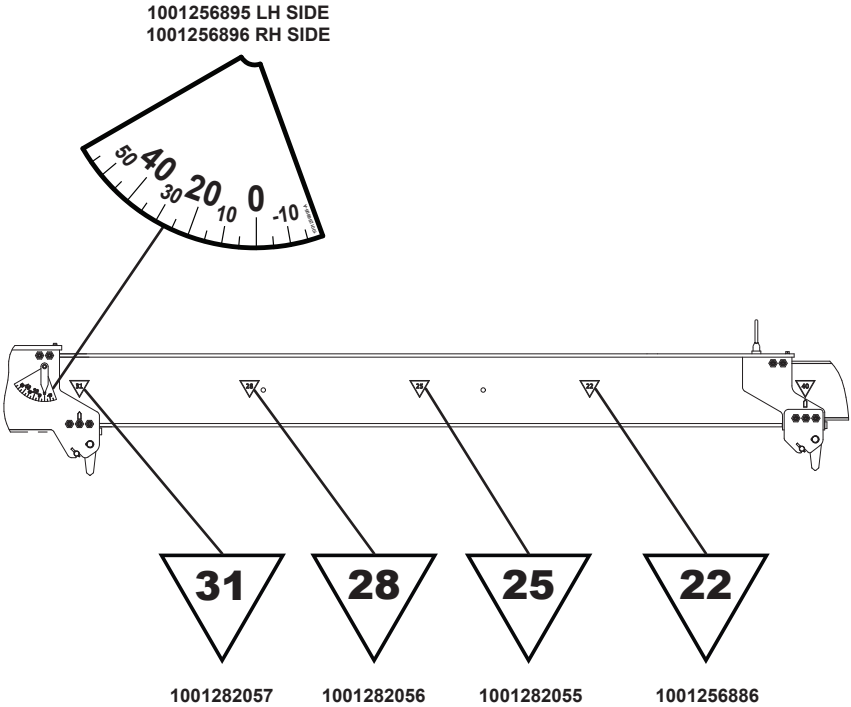

THREE STAGE WRECKER BOOM FLY SECTION

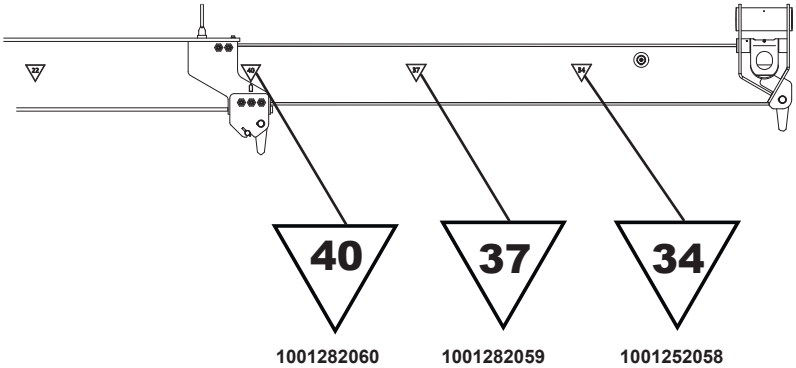

RIGHT HAND - CONTROL DECAL LOCATIONS

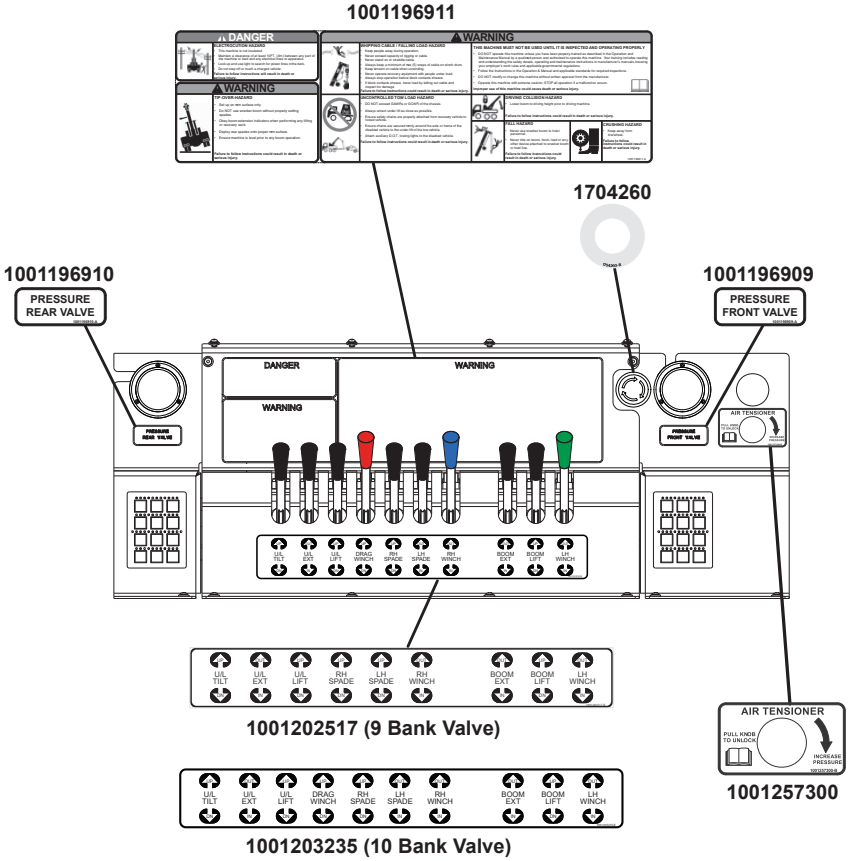

LEFT HAND - CONTROL DECAL LOCATIONS

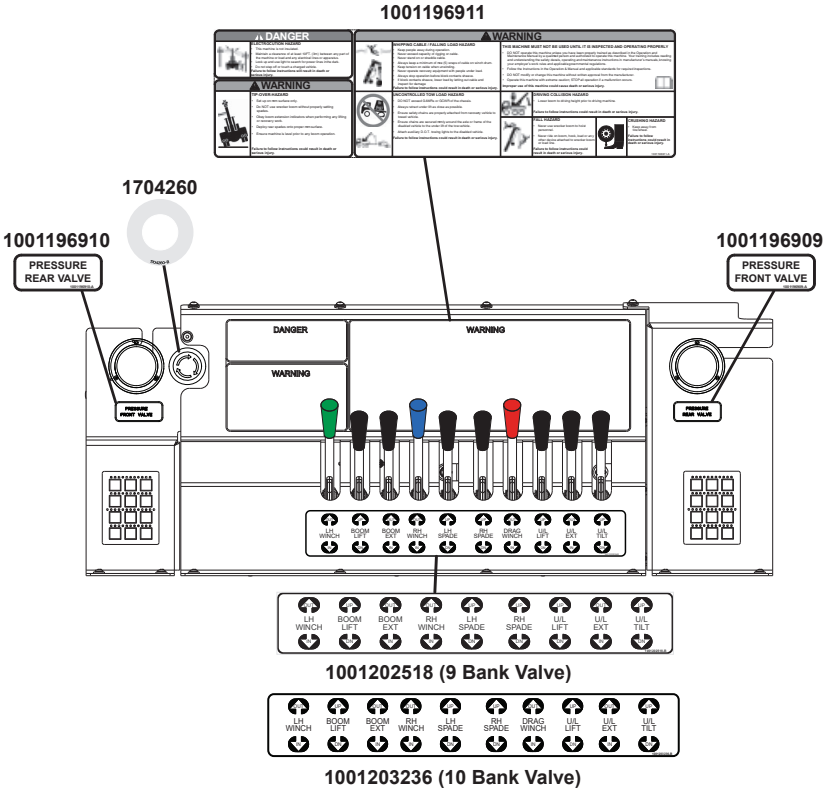

2.3 WALK-AROUND INSPECTION

NOTE: *Complete all required maintenance before operating the unit.*

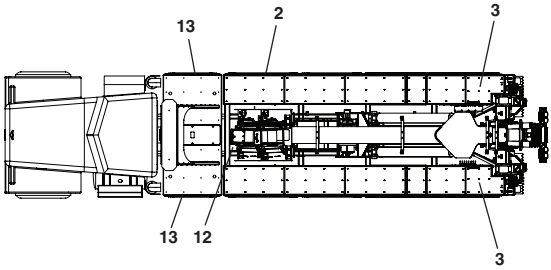

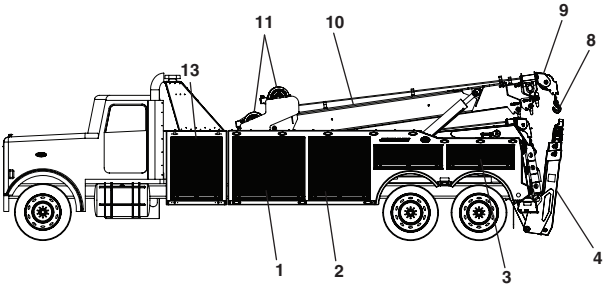

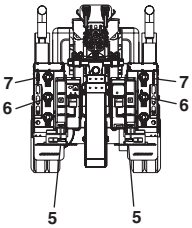

Begin your walk-around inspection at item 1, as noted below checking each item in sequence.

INSPECTION NOTE: On all components, make sure there are no loose or missing parts, that they are securely fastened and no visible leaks or excessive wear exists in addition to any other criteria mentioned. Inspect all structural members including attachment for cracks, excessive corrosion and other damage.

⚠ WARNING

FALL HAZARD. Use extreme caution when checking items beyond your normal reach. Use an approved ladder.

⚠ CAUTION

All products are subject to age, wear and deterioration, all of which cause a reduction in the products breaking strength capacity. It is recommended that all products be regularly inspected to follow component manufacturer's recommendations. Any worn, deformed, misused or overloaded products must be replaced immediately.

1. Heavy Duty Tire Lift (If Equipped)
    a. Components undamaged
    b. Tie-Down Straps undamaged
    c. Strap Ratchets operational
    d. Pins undamaged
    e. Safety Chains undamaged
2. Underlift Tools
    a. Components undamaged
    b. Chains undamaged
    c. Pins undamaged
    d. Safety Chains undamaged
3. Hydraulic Controls
    a. Hydraulic hoses undamaged, not leaking
    b. Valve, not leaking
    c. Pins, secure
    d. Check for presence of grease
4. Underlift
    a. Knee Boom Pivot pin secure
    b. Cylinder pins secure
    c. Hydraulic hoses undamaged, not leaking
    d. Underlift pivot pin, secure
    e. Underlift tilt pivot pin, secure
    f. Check wear pads for presence of grease
    g. Crossbar pivot pin, secure
    h. Crossbar pivot pin, presence of grease

5. Rear Outrigger/Spades – Left Hand and Right Hand
    a. Check for presence of grease
    b. Cylinder pivot pins, secure
    c. Hydraulic hoses undamaged, not leaking
    d. Spade Claw pivot pin, secure
6. Rear Access Steps
    a. Components undamaged
    b. Steps, secure
7. Rear Access Grab Handles
    a. Components undamaged
    b. Steps, secure
8. Wire Rope and Hooks
    a. Wire Rope, Undamaged
    b. Wire Rope, presence of grease
    c. Wire Rope Hooks, Undamaged
    d. Wire Rope Hook Latches, Undamaged and functional
9. Winch Sheave(s)
    a. Check for presence of grease
    b. Pivot pin secure
10. Wrecker Boom
    a. Check wear pads for presence of grease
    b. Pivot pin secure
    c. Extension Cylinder Pins secure; hydraulic hoses undamaged, not leaking
    d. Lift Cylinder Pivot pins secure; hydraulic hoses undamaged, not leaking
11. Winch(s)
    a. Hydraulic hoses undamaged, not leaking
    b. Gear oil level full

12. Hydraulic Tank
    a. Hydraulic fluid level full
    b. Hydraulic hoses undamaged, not leaking
13. Pull-Out Drawer Dampening Straps (6 straps, 2 straps per drawer) (If Equipped)
    a. Check for damaged or broken straps
    b. Check strap to body connections
    c. Check strap to drawer connections

2.4 OPERATIONAL CHECKS

OPERATIONAL CHECK

When engine warms, perform an operational check:

1. Service brake and parking brake operation.
2. Horn and back-up alarm. Must be audible from inside operators cab with engine running.
3. Manually controlled hydraulic functions - all functions operate smoothly and the controls return to the “Neutral Off” position.
4. Hydraulic filter condition indicator.
5. Power-Take-Off operation.
6. Electric over hydraulic controlled functions - all functions operate smoothly and the controls return to the “Neutral Off” position.
7. Body lighting operation.
8. Emergency lighting operation.

THIS PAGE IS INTENTIONALLY LEFT BLANK

SECTION 3 - CONTROLS & INDICATORS

3.1 GENERAL

This section provides the necessary information needed to understand control functions.

The controls inside the cab control the body compartment lights, emergency lights, auxiliary lights and the Power Take Off. The Power Take Off provides a transfer of power from the transmission to a hydraulic pump to provide hydraulic power to the JD60 IND.

The controls in the rear body compartments of the HDL control all of the Wrecker Boom and Underlift functions as well as all of the winch, and outrigger/spade functions. Emergency lights and auxiliary lights can also be controlled from the controls in the rear of the body.

The JD60 IND may also be supplied with various wireless remote controllers. The wireless remote controllers can be found in the right hand forward rear body compartment. The standard 6 function controller operates all of the underlift boom functions. An optional 10 function controller operates all wrecker boom and winch functions, or an optional 14 function controller operates all underlift boom, wrecker boom and winch functions.

Note: *The manufacturer has no direct control over machine application and operation. The user and operator are responsible for conforming with good safety practices.*

3.2 CONTROLS

LEFT HAND - SIDE CONTROL STATION

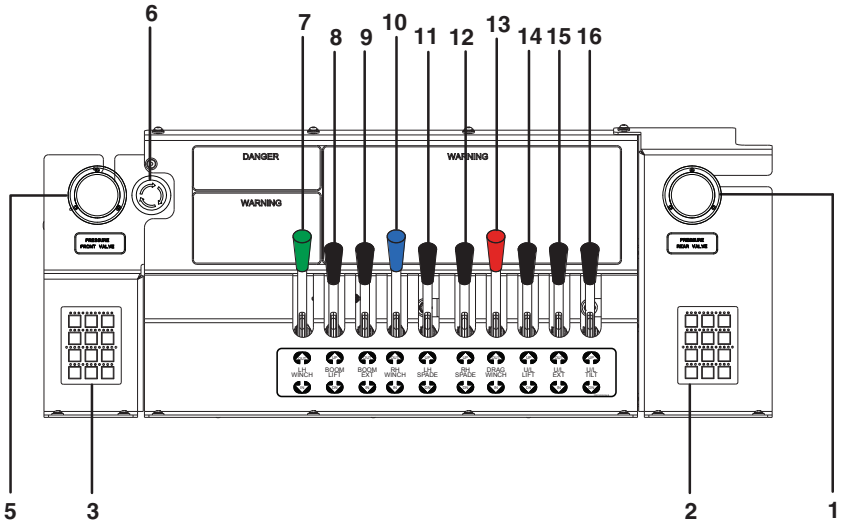

RIGHT HAND - SIDE CONTROL STATION

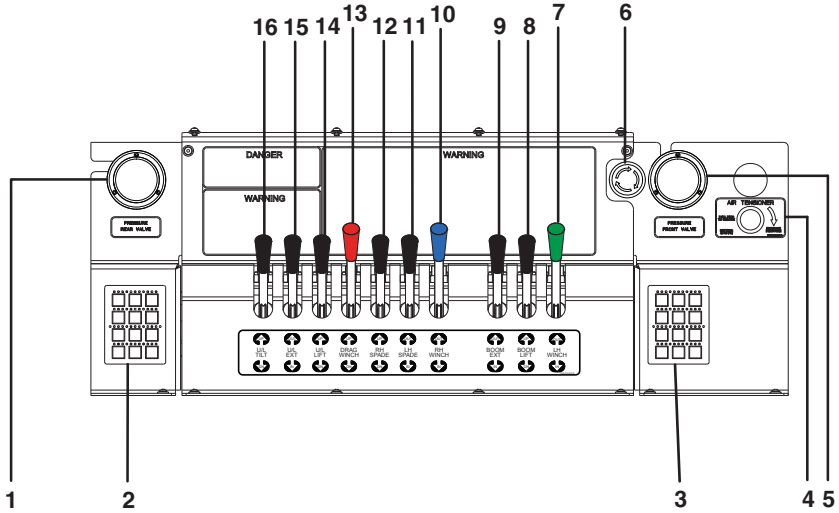

1.	Pressure Gauge - Rear Valve	: Indicates system hydraulic pressure at rear valve.
2.	Light Controls Button Switches	: Controls Auxiliary and Emergency Lighting.
3.	Winch Air Controls Button Switches	: Engages/disengages the winch(s) into free-spool and the winch 2-speed control (if equipped).
4.	Winch Air Tension Regulator	: Adjusts the air pressure at the winch wire rope tensioners.
5.	Pressure Gauge - Front Valve	: Indicates system hydraulic pressure at front valve.
6.	Emergency Stop	: Provides for an Emergency SHUT-OFF of the truck engine and all functions in the event of an emergency.
7.	LH Winch – In/Out	: Controls the wire rope winding/ unwinding functions of the LH wrecker boom winch.
8.	Wrecker Boom Lift – Up/Down	: Controls the raising/lowering functions of the wrecker boom.
9.	Wrecker Boom Extend – In/Out	: Controls the extend/retract functions of the wrecker boom.
10.	RH Winch – In/Out	: Controls the wire rope winding/ unwinding functions of the RH wrecker boom winch.
11.	Left Rear Outrigger/Spade – Up/Down	: Controls the extend/retract functions of the Left Rear Outrigger/Spade.
12.	Right Rear Outrigger/Spade – Up/Down	: Controls the extend/retract functions of the Right Rear Outrigger/Spade.
13.	Drag Winch – In/Out	: Controls the wire rope winding/ unwinding functions of the drag winch (if equipped).
14.	Underlift Boom Lift – Up/Down	: Controls the raising/lowering functions of the underlift boom.
15.	Underlift Boom Extend – In/Out	: Controls the extend/retract functions of the underlift boom.
16.	Underlift Boom Tilt – Up/Down	: Controls the tilt up/down functions of the underlift boom.

3.3 CONTROLS - IN-BODY SWITCH PANELS

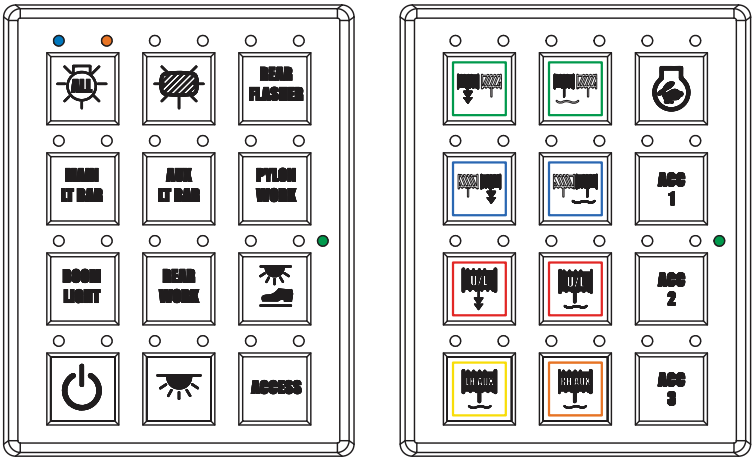

The in-body switch panels are powered by the truck chassis ignition switch. The Green LED will illuminate on the switch panels when the ignition switch is in the on position.

Pushing a switch button will activate the selected function. The Blue LED will illuminate above the switch button when a function is activated.

An Orange LED will illuminate above a switch button when there is an electrical fault in that function or that option is not installed

ALL	All Lights On Switch	:	Activates all Controlled Light Options except the Rear most Side Flashers and Access Lights.
	Flashers Switch	:	Activates all of the Hood and Body Flashers - Front, Side and Rear (Minus the Rear most Side Flashers).
REAR FLASHER	Rear Flasher Lights Switch	:	Activates all of the Rearmost Side Flashers on the Body.
MAIN LT BAR	Main Light Bar Switch	:	Activates the Inner and Outer Main Light Bar.
AUX LT BAR	Auxiliary Light Bar Switch	:	Activates the Auxiliary Wing Lights Only.
PYLON WORK	Pylon Work Lights Switch	:	Activates the Work Lights Mounted on the Pylon.
BOOM LIGHT	Boom Light Switch	:	Activates the Boom Work Light.
REAR WORK	Rear Work Lights Switch	:	Activates the Upper Rear Facing Work Lights
	Perimeter Lights Switch	:	Activates the Underlift, Outrigger, and Lower Hook-Up Scene Lights
	Control Power Switch	:	Activates the Remote Control Receiver/Panel Power
	Cabinet Lights Switch	:	Activates the Interior Body Compartment Lights
ACCESS	Access Lights Switch	:	Activates the Access Lights (Steps and Handles)
	LH Winch - 2-Speed	:	Engages the LH Boom Winch into High Speed when Activated. (Green Wire Rope Hook and Cable Guide)
	LH Winch - Freespool	:	Releases LH Boom Winch into Freespool when Activated. (Green Wire Rope Hook and Cable Guide)

	Engine Idle Up	:	Activates the Engine Idle Up
	RH Winch - 2-Speed	:	Engages the RH Boom Winch into High Speed when Activated. (Blue Wire Rope Hook and Cable Guide)
	RH Winch - Freespool	:	Releases RH Boom Winch into Freespool when Activated. (Blue Wire Rope Hook and Cable Guide)
ACC 1	Accessory 1	:	Supplies Power to Wire Lead on Wiring Harness from the Power Distribution Panel to Multiplex Controller. (Tagged: “ACC 1 OUTPUT”)
U/L	Underlift Winch - 2-Speed	:	Engages the Underlift Drag Winch into High Speed when Activated. (Red Wire Rope Hook and Cable Guide)
U/L	Underlift Winch - Freespool	:	Releases Underlift Drag Winch into Freespool when Activated. (Red Wire Rope Hook and Cable Guide)
ACC 2	Accessory 2	:	Supplies Power to Wire Lead on Wiring Harness from the Power Distribution Panel to Multiplex Controller. (Tagged: “ACC 2 OUTPUT”)
LH AUX	LH Aux Winch - Freespool	:	Option Not Available
RH AUX	RH Aux Winch - Freespool	:	Option Not Available
ACC 3	Accessory 3	:	Supplies Power to Wire Lead on Wiring Harness from the Power Distribution Panel to Multiplex Controller. (Tagged: “ACC 3 OUTPUT”)

3.4 6 FUNCTION HAND CONTROLLER

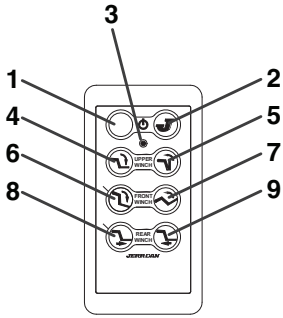

1. Power “OFF” Button : Turns “OFF” the Hand Controller Power.
2. Power “ON” Button : Turns “ON” the Hand Controller Power.
3. Power Indicator Light : Indicates that the Hand Controller is powered “ON” when Illuminated.
4. Underlift Boom Tilt – Down : Controls the tilt down functions of the underlift boom.
5. Underlift Boom Tilt – Up : Controls the tilt up functions of the underlift boom.
6. Underlift Boom – Down : Controls the lowering functions of the underlift boom.
7. Underlift Boom – Up : Controls the raising functions of the underlift boom.
8. Underlift Boom Extend – Out : Controls the extend functions of the underlift boom.
9. Underlift Boom Retract – In : Controls the retract functions of the underlift boom.

3.5 HAND CONTROLLER - PORTABLE CONTROL UNIT/ TRANSMITTER (PCU)

1. Proportional Paddles Panel	:	Contains the proportional paddle controls for the wrecker boom, and winch functions.
2. Indicator Panel	:	Contains the indicator lights for winch speed, freespool functions, engine throttle speed and remote control status.
3. Toggle Switch Panel	:	Contains the toggle switch controls for winch speed and winch freespool functions.
4. Power/Stop/Micro Switch Panel	:	Contains the toggle switch controls for proportional control speeds, PCU power and complete stop.

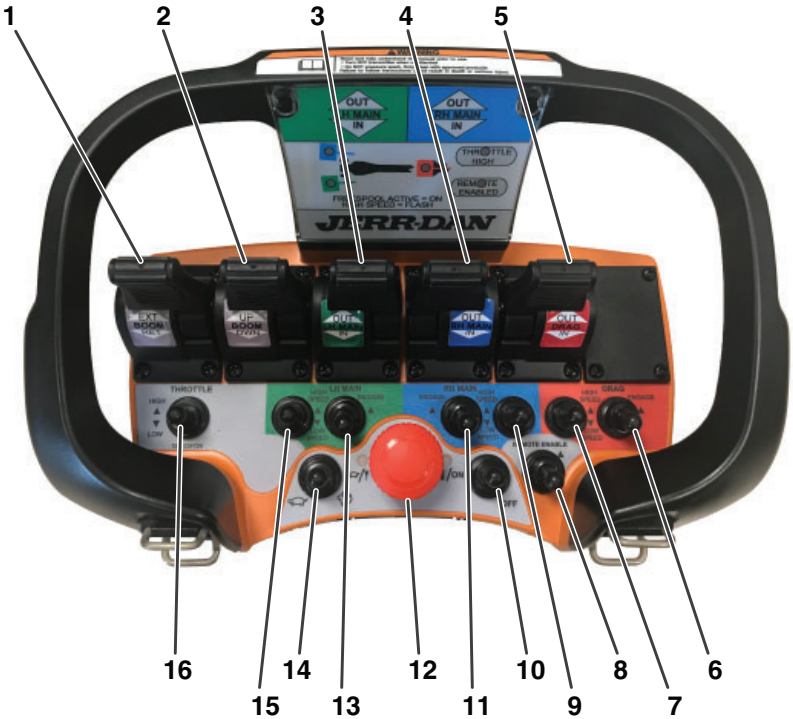

1.	Wrecker Boom Extend – In/Out	EXTEND ⇕ RETRACT	: Controls the extend/retract functions of the wrecker boom.
2.	Wrecker Boom Lift – Up/Down	UP ⇕ DN	: Controls the raising/lowering functions of the wrecker boom.
3.	Left Hand Wrecker Boom Winch – In/Out	OUT ⇕ IN	: Controls the wire rope winding/ unwinding functions of the left hand wrecker boom winch. (Green Wire Rope Hook and Cable Guide)
4.	Right Hand Wrecker Boom Winch – In/Out	OUT ⇕ IN	: Controls the wire rope winding/ unwinding functions of the right hand wrecker boom winch. (Blue Wire Rope Hook and Cable Guide)
5.	Underlift Drag Winch – In/Out	OUT ⇕ IN	: Controls the wire rope winding/ unwinding functions of the underlift drag winch. (Red Wire Rope Hook and Cable Guide) (If Equipped)

6.	Underlift Drag Winch - Freespool Engage	ENGAGE ⇧	: Engages Underlift Drag Winch when Activated. Removes the winch from Freespool mode. (Red Wire Rope Hook and Cable Guide) (If Equipped) (Indicator Light will Illuminate. See pages 3-12 and 3-13)
7.	Underlift Drag Winch - 2-Speed	HIGH ⇕ LOW	: Toggles the Underlift Drag Winch between Low Speed and High Speed when Activated. (Red Wire Rope Hook and Cable Guide) (If Equipped) (Indicator Light will Illuminate. See pages 3-12 and 3-13)
8.	Remote Enable	ENABLE ⇧	: Controls the remote enable after a “Proportional” function “times out”. (See page 3-14)
9.	Right Hand Wrecker Boom Winch- 2-Speed	HIGH ⇕ LOW	: Toggles the Right Hand Wrecker Boom Winch between Low Speed and High Speed when Activated. (Blue Wire Rope Hook and Cable Guide) (Indicator Light will Illuminate. See pages 3-12 and 3-13)
10.	Power Switch	⏻/ON ⇕ OFF	: Turns “ON” and “OFF” the Hand Controller - Portable Control Unit/ Transmitter (PCU) (Indicator Light will Illuminate. See pages 3-12 and 3-13)
11.	Right Hand Wrecker Boom Winch - Freespool Engage	ENGAGE ⇧	: Engages Right Hand Wrecker Boom Winch when Activated. Removes the winch from Freespool mode. (Blue Wire Rope Hook and Cable Guide) (If Equipped) (Indicator Light will Illuminate. See pages 3-12 and 3-13)
12.	Stop Button		: Initiates a complete SHUT-OFF of the truck engine and all functions. Push in to engage emergency stop. : Turn clockwise and release to reset emergency stop

13.	Left Hand Wrecker Boom - Freespool Engage	ENGAGE ⇧	: Engages Left Hand Wrecker Boom Winch when Activated. Removes the winch from Freespool mode. (Green Wire Rope Hook and Cable Guide) (Indicator Light will Illuminate. See pages 3-12 and 3-13)
14.	Micro Speed Control	⇔	: Toggles all proportional controls between “Turtle” mode and “Rabbit” mode. (Indicator Light will Illuminate. See pages 3-12 and 3-13
15.	Left Hand Wrecker Boom Winch- 2-Speed	HIGH ⇕ LOW	: Toggles the Left Hand Wrecker Boom Winch between Low Speed and High Speed when Activated. (Green Wire Rope Hook and Cable Guide) (Indicator Light will Illuminate. See pages 3-12 and 3-13)
16.	Throttle	HIGH ⇕ LOW	: Toggles the engine speed between Low (Idle) Speed and High Speed. (Indicator Light will Illuminate. See pages 3-12 and 3-13)

1. Left Hand Wrecker Boom Winch Status Indicator Light	: "LED not Illuminated" - Winch is engaged, Low Speed. : "LED Illuminated" - Freespool mode is active. : "LED Flashing" - Winch is engaged, High Speed. (Green Wire Rope Hook and Cable Guide)
2. Right Hand Wrecker Boom Winch Status Indicator Light	: "LED not Illuminated" - Winch is engaged, Low Speed. : "LED Illuminated" - Freespool mode is active. : "LED Flashing" - Winch is engaged, High Speed. (Blue Wire Rope Hook and Cable Guide)

3.	Underlift Drag Winch Status Indicator Light	: “LED not Illuminated” - Winch is engaged, Low Speed. : “LED Illuminated” - Freespool mode is active. : “LED Flashing” - Winch is engaged, High Speed. (Red Wire Rope Hook and Cable Guide)
4.	High Throttle Status Indicator Light	: “LED not Illuminated” - Idle engine speed is active. : “LED Illuminated” - Preset elevated engine speed is active.
5.	Remote Enable Status Indicator Light	: “LED not Illuminated” - The remote proportional functions are disabled. : “LED Illuminated” - The remote proportional functions are enabled.
6.	Micro/RF Indicator Light	: “LED not Illuminated” - Normal Mode, Linked. : “LED Flashing GREEN” - 50% speed reduction active. : ”LED Flashing RED” - No radio link to Central Unit/Receiver (CU).
7.	Power/Low Battery Indicator Light	: “LED not Illuminated” - Power Off, Portable Control Unit/Transmitter (PCU) is deactivated. : “LED Illuminated Solid RED” - On, PCU is activated. : “LED Flashing RED” - On, PCU is activated with Low Battery! (Buzzer will emit an alarm for the first three sequences when low level is detected)

Proportional Function Timeout:

The Portable Control Unit/Transmitter (PCU) is preset to disable all proportional functions after a period of 5 minutes of inactivity. When the proportional functions are inactive the remote enabled indicator light will turn off. The proportional functions can be reactivated by pushing the remote enable switch up. This timeout does not disable communication with the Central Unit/Receiver (CU) or disable the use of the toggle switches.

Tilt Sensor:

The PCU has a preset tilt sensor that will disable all proportional functions if the PCU is tilted past the operating position for longer than 5 seconds. The audible alarm/buzzer will sound during the 5 second countdown to warn that the remote has been tilted past operating position of ±100 ° and will be shut down if not returned to operating position. The proportional functions can be reactivated by pushing the remote enable switch up. This timeout does not disable communication with the CU or disable the use of the toggle switches.

Inactivity Timeout:

The PCU is preset to timeout and turn off after a period of 10 minutes of inactivity. This timeout disables communication with the CU to conserve power. The PCU can be turned back on and communication can be restored by pushing the On toggle up once.

3.6 14 FUNCTION HAND CONTROLLER

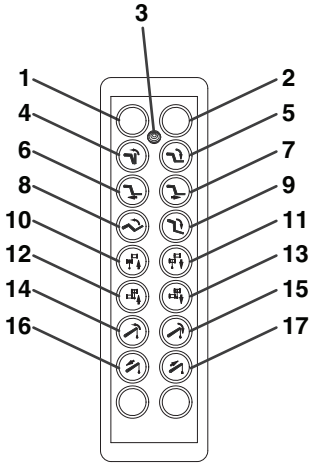

1.	Power “OFF” Button	: Turns “OFF” the Hand Controller Power.
2.	Power “ON” Button	: Turns “ON” the Hand Controller Power.
3.	Power Indicator Light	: Indicates that the Hand Controller is powered “ON” when Illuminated.
4.	Underlift Boom Tilt – Up	: Controls the tilt up functions of the underlift boom
5.	Underlift Boom Tilt – Down	: Controls the tilt down functions of the underlift boom
6.	Underlift Boom Retract – In	: Controls the retract functions of the underlift boom.
7.	Underlift Boom Extend – Out	: Controls the extend functions of the underlift boom
8.	Underlift Boom Raise – Up	: Controls the raising functions of the underlift boom
9.	Underlift Boom Lower – Down	: Controls the lowering functions of the underlift boom.
10.	Right Winch – In	: Controls the wire rope winding/ unwinding functions of the right winch.
11.	Right Winch – Out	: Controls the wire rope winding/ unwinding functions of the right winch
12.	Left Winch – In	: Controls the wire rope winding/ unwinding functions of the left winch.

13. Left Winch – Out	:	Controls the wire rope winding/ unwinding functions of the left winch.
14. Wrecker Boom Raise – Up	:	Controls the raising function of the wrecker boom
15. Wrecker Boom Lower – Down	:	Controls the lowering function of the wrecker boom.
16. Wrecker Boom Extend – In	:	Controls the extend function of the wrecker boom.
17. Wrecker Boom Retract – Out	:	Controls the extend function of the wrecker boom.

3.7 IN-CAB CONTROLLER

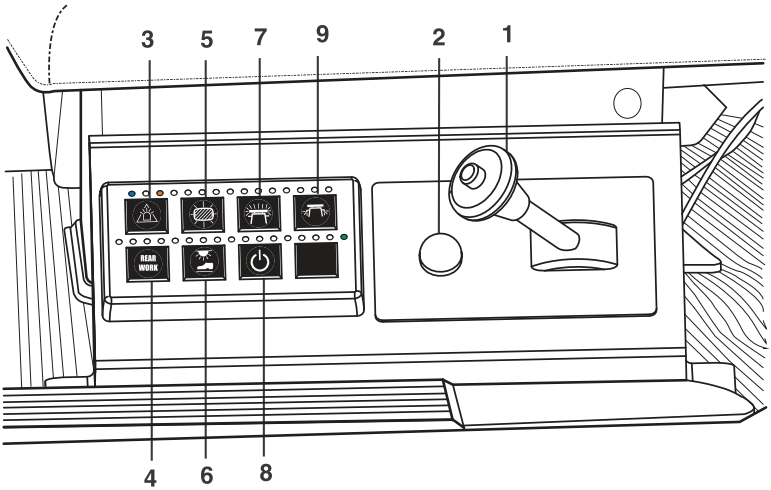

1.	Power Take Off Switch	:	Engages and disengages the Power Take Off.
2.	Power Take Off Indicator Light	:	Indicates that the Power Take Off is “Engaged” when illuminated.
3.	Awareness Lights Switch	:	Controls Emergency Lighting.
4.	Rear Work Light Switch	:	Controls Upper Rear Work Lights.
5.	Flasher Lights Switch	:	Controls Flasher Lights.
6.	Perimeter Lights Switch	:	Controls Perimeter Lights.
7.	Beacon Light Switch	:	Controls Pylon Beacon Light.
8.	Controls Power Switch	:	Controls power to the wireless hand controllers.
9.	Work Lights Switch	:	Controls Pylon and Boom Work Lights.

THIS PAGE IS INTENTIONALLY LEFT BLANK

SECTION 4 - OPERATION

The primary operator controls are located in the Right Hand Rear body compartment. A secondary set of operator controls are located in Left Hand Rear body compartment. There are also three optional handheld wireless remote controllers. Each remote controller operates various combinations of wrecker boom, winch and underlift functions.

4.1 UNDERLIFT OPERATION

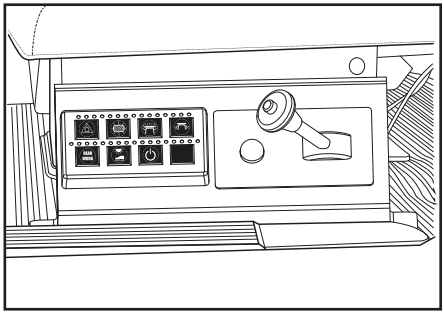

1. Turn on the emergency lights and auxiliary work lights. Refer to Controls and Indicators Section 3.

2. Using the rear axle of the recovery vehicle as a guide, position the recovery vehicle within nine (9) ft. of the subject casualty vehicle and as close to the direction of the pull as possible.

3. Place the recovery vehicle's transmission gear selector into neutral, set the parking brake and chock the wheels.

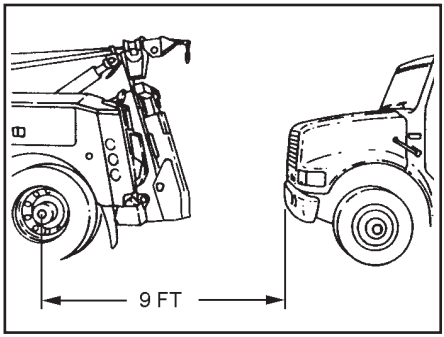

4. Engage the power take-off (PTO) See PTO operator's manual.

NOTICE

NEVER TRAVEL WITH THE POWER TAKE OFF CONTROL ENGAGED. This could result in damage to the PTO unit and the recovery vehicle's transmission.

5. Adjust the electronic or manual throttle control to elevate the engine speed to approximately 1000-1200 R.P.M. of P.T.O. output shaft speed for optimum performance. Refer to the cab chassis manufacturer's manual for throttle control operation.

⚠ CAUTION

Never exceed 1200 R.P.M. When your hook up is complete, reset the engine idle to normal.

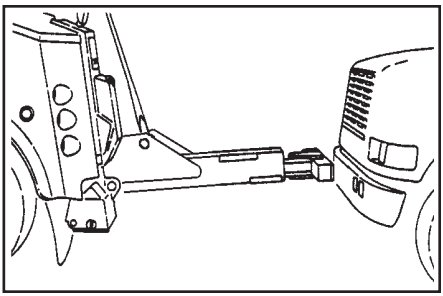

6. The recovery vehicle's position should be approximately nine (9) feet from the casualty vehicle. Reposition the recovery vehicle if necessary.

NOTICE

Be sure the casualty vehicle is not in gear or park. Keep the casualty vehicle parking brake set.

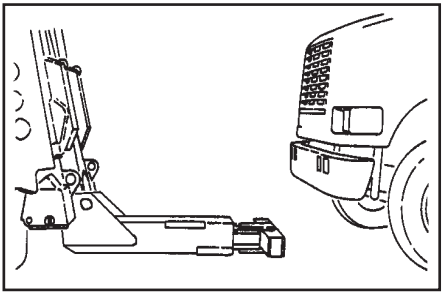

7. Using the underlift tilt function, lower the underlift boom down until it is in the horizontal position.
8. Lower the underlift boom to about one (1) in. from the ground.

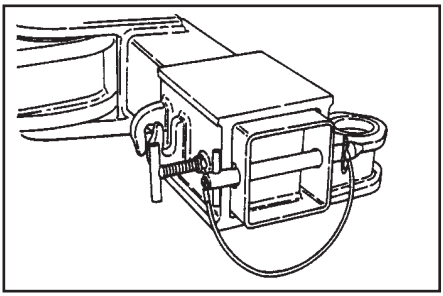

9. Attach the lift receivers to the crossbar by sliding them over the ends of the crossbar. The lift receivers are found in the body tool compartment. Install the retaining pin into the end of the crossbar and secure with the safety pin. Refer to **VARIOUS POSITIONS FOR LIFT RECEIVER USE** Section 4.2.

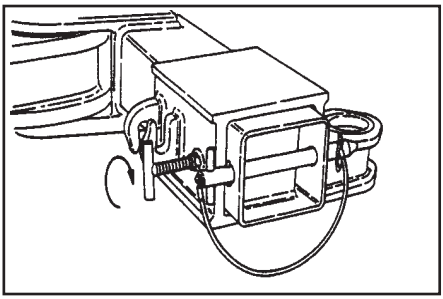

10. Adjust the lift receivers on the crossbar to the desired position and tighten the "T" handles to secure the receivers on the crossbar.

4.2 VARIOUS POSITIONS FOR LIFT RECEIVER USE

The lift receivers can be installed on the underlift crossbar in different ways depending on your particular need. As shown, the receivers can be installed with the lift attachment pin hole high, low, forward, rearward, inward or outward to accommodate differences in casualty vehicle axle heights, axle setbacks, or suspension components.

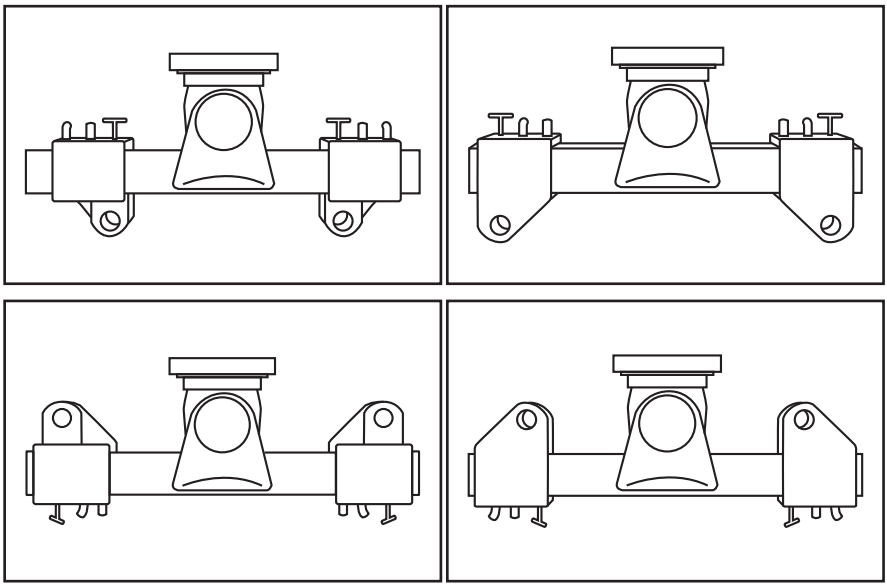

4.3 UNDERLIFT ATTACHMENTS SUPPLIED WITH THE JD60 IND

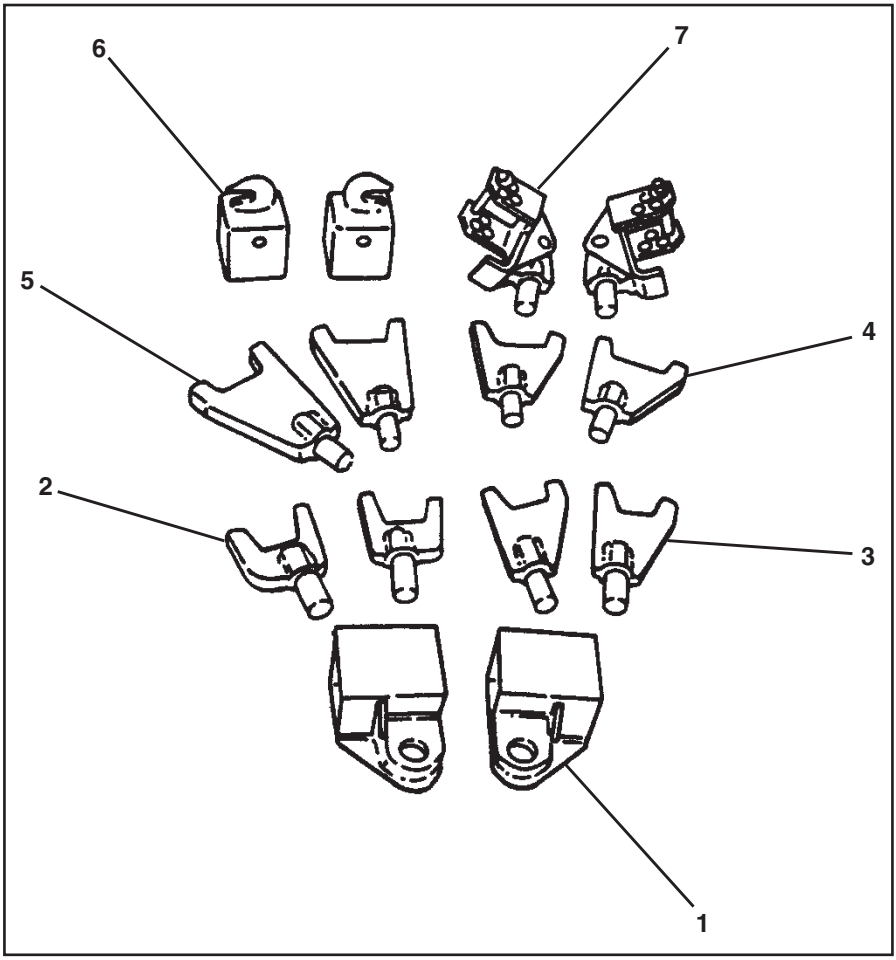

1. Lift Receivers
2. Short Frame Fork - 3″ W x 2-1/2″ H
3. Medium Frame Fork - 3″ W x 6″ H
4. Medium Frame Fork - 4-1/2″ W x 6″ H
5. Long Frame Fork - 4/1-2″ W x 9″ H
6. Chain Hook Adapter
7. Spring Lift Brackets

4.4 SPRING LIFT BRACKETS

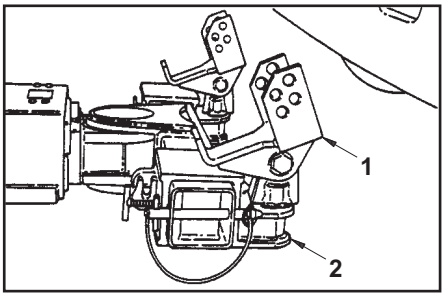

1. Insert the spring lift brackets (1) into the receivers (2) that you previously installed on the crossbar.

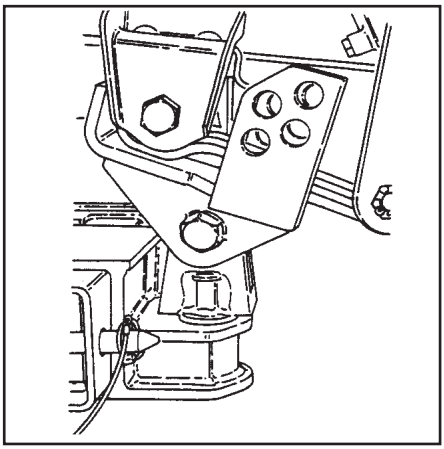

2. Extend the underlift boom under the casualty vehicle so that the spring lift brackets are in the proper position for lifting. Make sure that the spring lift brackets are against the front part of the spring hanger as shown.

NOTICE

At the same time make sure not to attach the Spring lift brackets to any steering components of the casualty vehicle.

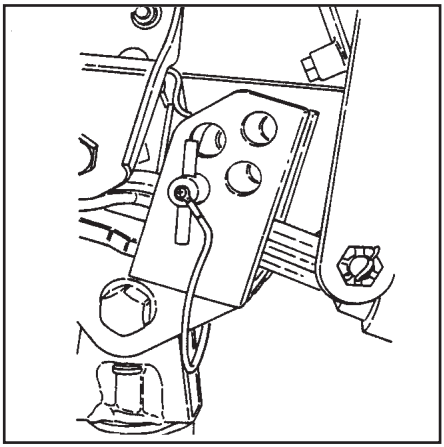

3. Raise the underlift boom to lift the casualty vehicle slightly.

4. Secure the casualty vehicle to the spring lift brackets with the retaining pins and safety pins.

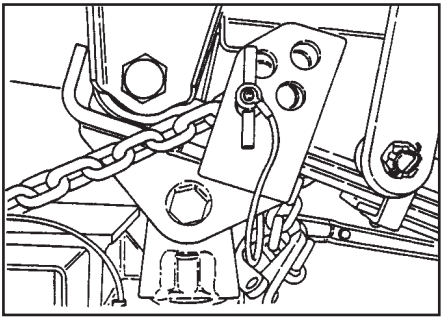

5. Secure the casualty vehicle to the crossbar with rated chain(s) or straps and binder(s)

⚠ CAUTION

Ensure to use properly rated chains.

6. After securing the casualty vehicle and before making the final lift, check to be sure that the casualty's parking brake is released, the transmission is in neutral, and the wheels are straight.

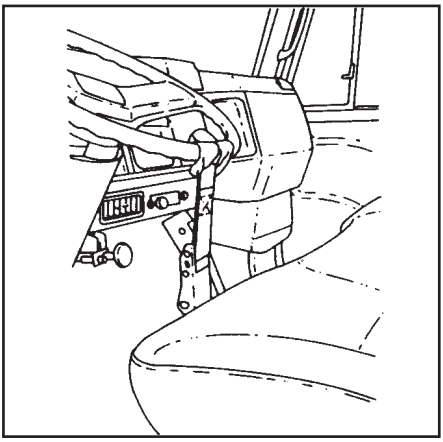

7. It is recommended that the steering wheel of the casualty vehicle be secured by a steering wheel strap for any front or rear tow.

8. With the casualty vehicle in neutral and the parking brake released, the underlift can be raised, lowered, extended or retracted. All of these movements are hydraulically controlled.

9. Power retract the underlift until the casualty vehicle is as close as possible, for the best weight loading, about three (3) to four (4) feet from the back of the recovery vehicle. Leave enough room to maneuver around corners without corner binding or causing contact between the recovery and casualty vehicles.

⚠ CAUTION

Be sure that the fly boom is extended at least four (4) in. from the middle boom section to ensure unobstructed crossbar pivoting.

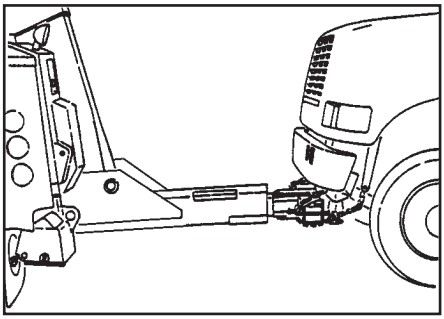

10. Raise the casualty vehicle into towing position observing the far end for sufficient ground clearance.

⚠ CAUTION

It is possible to set the rear of a front lifted vehicle completely onto the ground, causing damage. Take irregular road surfaces into consideration.

NOTICE

When towing, position the Underlift Boom as close to horizontal as possible for improved towing turning radius and maneuvering. This will also prolong the life of your underlift and pivot pin.

⚠ CAUTION

Always follow the casualty vehicle chassis manufacturer's recommended procedures for towing. Remove drive lines and drive shafts as directed. Many vehicles can be severely damaged unless these components are removed prior to towing.

11. Be sure to maintain sufficient ground clearances with the bottom of the casualty vehicle.

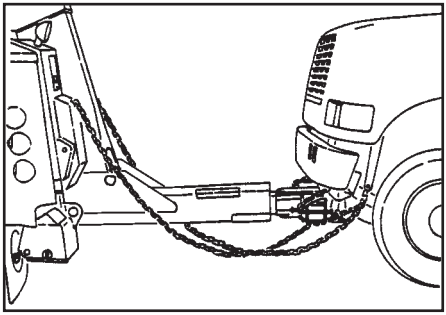

12. Attach the safety chains to the casualty vehicle.
13. Attach auxiliary D.O.T. towing lights to the casualty vehicle.
14. Hook-up and connect air and braking systems. Follow the casualty vehicle chassis manufacturer's instructions.

⚠ WARNING

Never fold the boom up into the storage position without removing the underlift attachments from the crossbar receivers..

⚠ CAUTION

The use of secondary tie-down chains is recommended. Install the tie-down chains between the axle or substantial chassis component and the towbar.

4.5 FRAME FORKS

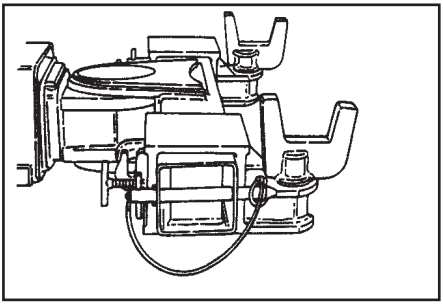

1. Choose the frame forks that are best suited to your needs and insert them into the receivers that you previously installed on the crossbar.

2. Extend the underlift boom under the vehicle so that the frame forks are in the proper position under the frame or axle for lifting.

NOTICE

At the same time make sure not to attach the Spring lift brackets to any steering components of the casualty vehicle.

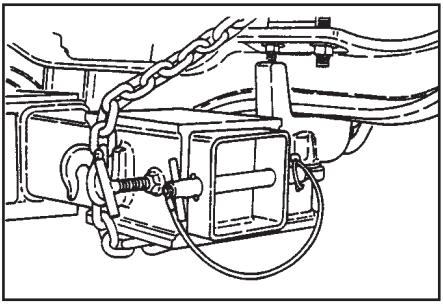

3. Raise the underlift boom to lift the casualty vehicle slightly.

4. Secure the casualty vehicle to the crossbar with rated chain(s) or straps and binder(s)

5. After securing the casualty vehicle and before making the final lift, check to be sure that the casualty vehicle's parking brake is released, the transmission is in neutral, and the wheels are straight.

⚠ CAUTION

Ensure to use properly rated chains.

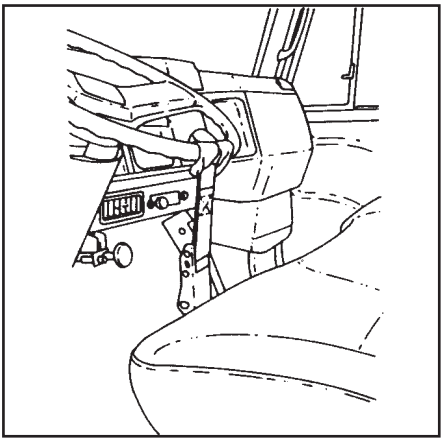

6. It is recommended that the steering wheel of the casualty vehicle be secured by a steering wheel strap for any front or rear tow.

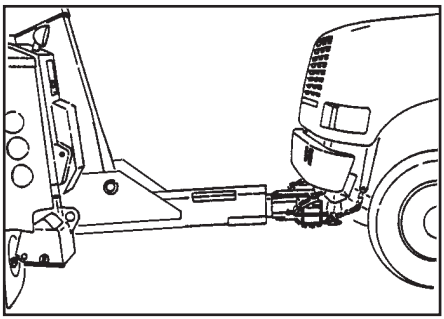

7. With the casualty vehicle in neutral and the parking brake released, the underlift can be raised, lowered, extended or retracted. All of these movements are hydraulically controlled.

8. Power retract the underlift until the casualty vehicle is as close as possible, for the best weight loading, about three (3) to four (4) feet from the back of the recovery vehicle. Leave enough room to maneuver around corners without corner binding or causing contact between the recovery and casualty vehicles.

⚠ CAUTION

Be sure that the fly boom is extended at least four (4) in. from the middle boom section to ensure unobstructed crossbar pivoting.

9. Raise the casualty vehicle into towing position observing the far end for sufficient ground clearance.

⚠ CAUTION

It is possible to set the rear of a front lifted vehicle completely onto the ground, causing damage. Take irregular road surfaces into consideration.

NOTICE

When towing, position the Underlift Boom as close to horizontal as possible for improved towing turning radius and maneuvering. This will also prolong the life of your underlift and pivot pin.

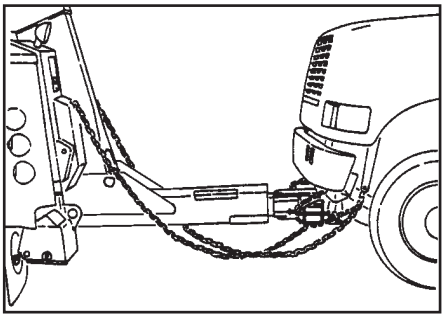

10. Be sure to maintain sufficient ground clearances with the bottom of the casualty vehicle.

11. Attach the safety chains to the casualty vehicle.

12. Attach auxiliary D.O.T. towing lights to the casualty vehicle.

13. Hook-up and connect air and braking systems. Follow the casualty vehicle chassis manufacturer's instructions.

⚠ WARNING

Never fold the boom up into the storage position without removing the underlift attachments from the crossbar receivers.

4.6 CHAIN HOOK ADAPTERS

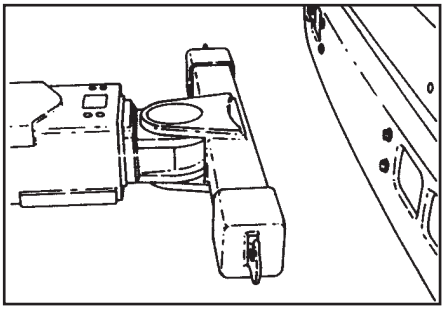

1. Slide the chain hook adapters onto the crossbar.

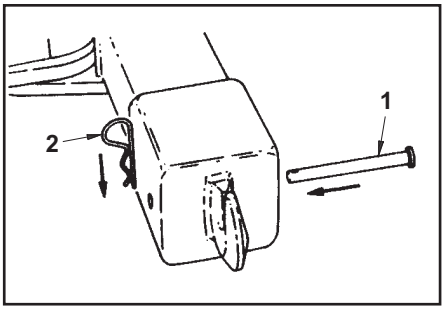

2. Install the retaining pin (1) from the back side of the crossbar through the adapter and crossbar and install the hairpin (2).
3. Extend the underlift boom up to the casualty vehicle so that the chain hook adapters are in the proper position for lifting.

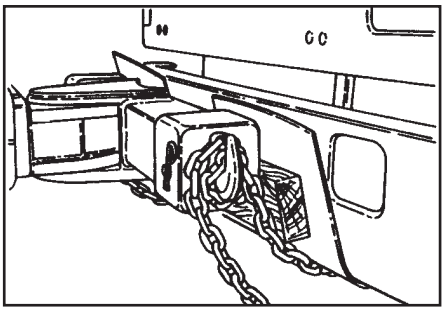

4. Attach hook-up chains to the casualty vehicle. Fasten the chains in the hooks on the end of the adapters and safety wrap the chain around the bottom of the hook as shown. Secure the remaining chain. The use of rubber mats and wood blocks may be required to protect the casualty vehicle.

⚠ CAUTION

Ensure to use properly rated chains.

5. Raise the underlift boom to lift the casualty vehicle slightly. At the same time make sure that you are not going to damage any components of the casualty vehicle.

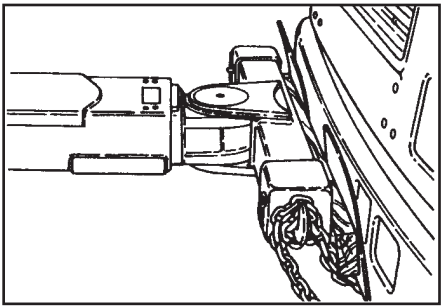

6. After securing the casualty vehicle and before making the final lift, check to be sure that the casualty vehicle's parking brake is released, the transmission is in neutral, and the wheels are straight.

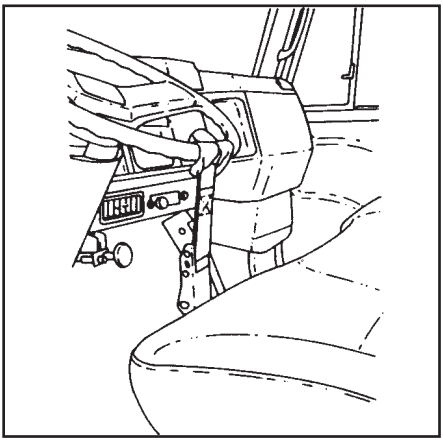

7. It is recommended that the steering wheel of the casualty vehicle be secured by a steering wheel strap for any front or rear tow.

8. With the casualty vehicle in neutral and the parking brake released, the underlift can be raised, lowered, extended or retracted. All of these movements are hydraulically controlled.

9. Power retract the underlift until the casualty vehicle is as close as possible, for the best weight loading, about three (3) to four (4) feet from the back of the recovery vehicle. Leave enough room to maneuver around corners without corner binding or causing contact between the recovery and casualty vehicles.

⚠ CAUTION

Be sure that the fly boom is extended at least four (4) in. from the middle boom section to ensure unobstructed crossbar pivoting.

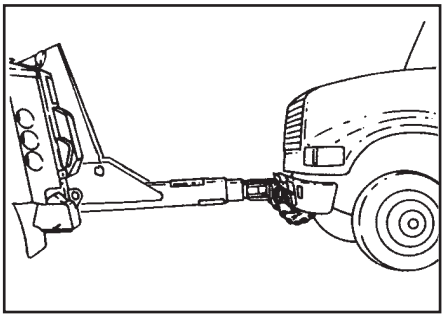

10. Raise the casualty vehicle into towing position observing the far end for sufficient ground clearance.

NOTICE

When towing, position the underlift boom as close to horizontal as possible for improved towing turning radius and maneuvering. This will also prolong the life of your underlift and pivot pin.

⚠ CAUTION

It is possible to set the rear of a front lifted vehicle completely onto the ground, causing damage. Take irregular road surfaces into consideration.

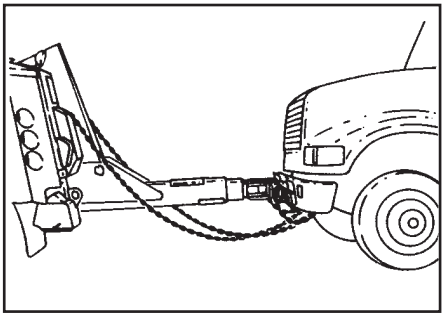

11. Be sure to maintain sufficient ground clearances with the bottom of the casualty vehicle.
12. Attach the safety chains to the casualty vehicle.
13. Attach auxiliary D.O.T. towing lights to the casualty vehicle.
14. Hook-up and connect air and braking systems. Follow the casualty vehicle chassis manufacturer's instructions.

4.7 HEAVY DUTY TIRE LIFT (OPTIONAL)

DO NOT EXCEED THE FOLLOWING RATINGS:

Also refer to Rating Tag affixed to the Tire Lift.

	HDTL	SHDTL
Lifting Capacity (Each Arm)	7,000 lbs.	12,500 lbs.
Lifting Capacity (Total)[2]	14,000 lbs.	25,000 lbs.
Towing Capacity (Structural Max.)[1]	80,000 lbs.	80,000 lbs.

[1] THE TOWING CAPACITY SHOULD NOT EXCEED THE GROSS COMBINED WEIGHT RATING (GCWR) OF THE TOWING VEHICLE OR THE 80,000 LB. STRUCTURAL CAPACITY OF THE TIRE LIFT, WHICHEVER IS LOWER.

[2] **MAXIMUM LIFTING CAPACITY** - THE MAXIMUM LOAD THAT CAN BE LIFTED.

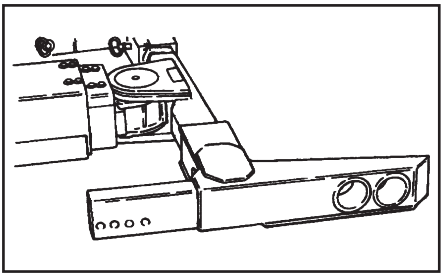

1. Remove the tire lift grid from the toolbox and slide the tire lift grid onto the crossbar. There are two width positions. The wider width would be used for wide front end lifts for example, and the narrow width would be used for narrower rear end lifts.

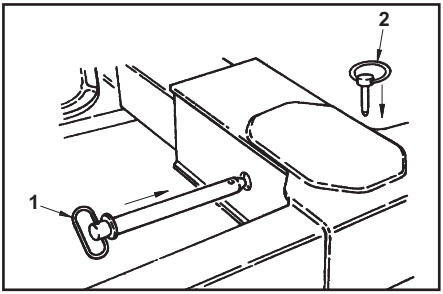

2. Install the retaining pin (1) from the back side of the crossbar through the grid and crossbar and secure with the pin (2).

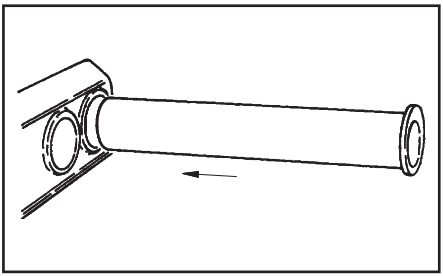

3. Insert the round tube into the desired position in the grid.

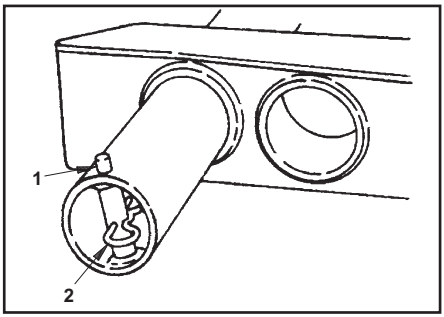

4. Install the retaining pin (1) and hairpin (2).

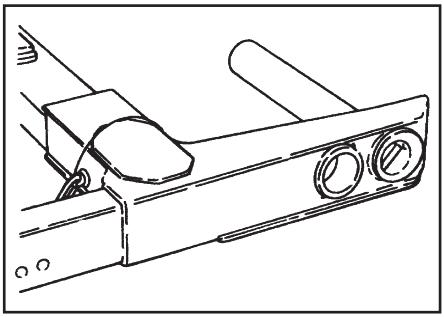

5. Retract the tube inward to the loading position so that the end of the tube will clear the tires.

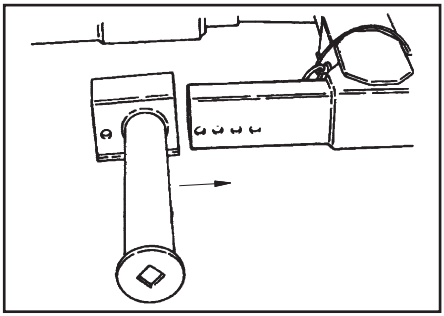

6. Slide the arm weldment over the end of the grid and adjust to the desired position for loading.

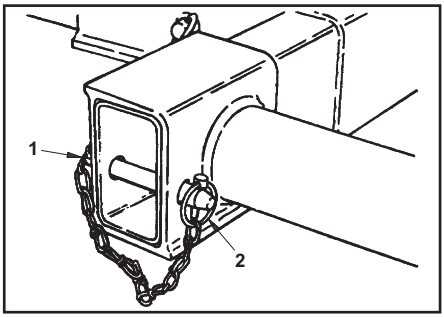

7. Install the retaining pin (1) through the grid and arm weldment and secure with the click pin (2).

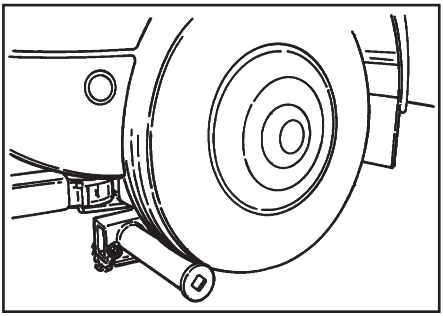

8. Extend the underlift under the casualty vehicle so that the arm makes contact with the front of the tires.

NOTICE

At the same time make sure the tire lift brackets are not going to damage any under body components of the casualty vehicle.

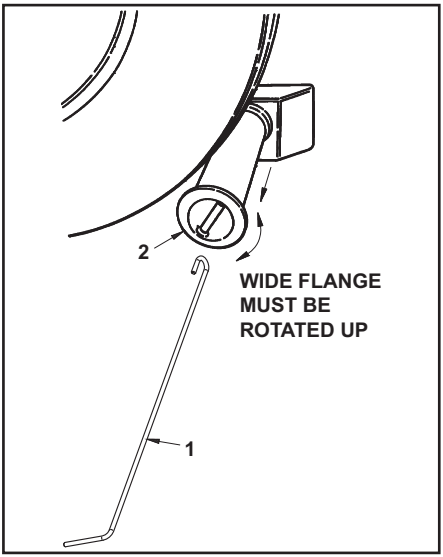

9. Using the pulling tool (1), extend the round tube (2) to capture the back of the tire. After extending the tube beyond the edge of the tire, make sure that the wide flanged edge of the tube is rotated up to prevent the tire from sliding off the end of the tube.

⚠ CAUTION

When lifting a vehicle that has dual rear tires, only extend the round tube out to capture the inside tire. The wide flanges edge of the tube must be between the tires and rotated up to prevent the tire from sliding off the end of the tube.

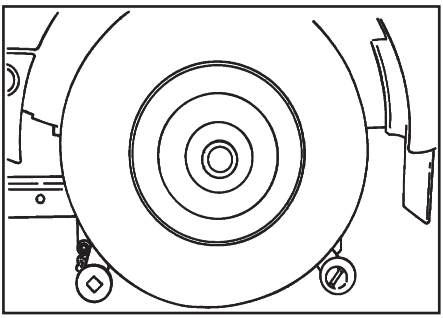

10. Raise the underlift boom to lift the casualty vehicle enough to get the tires off of the ground. Make sure that you are not going to damage any under body components of the casualty vehicle.

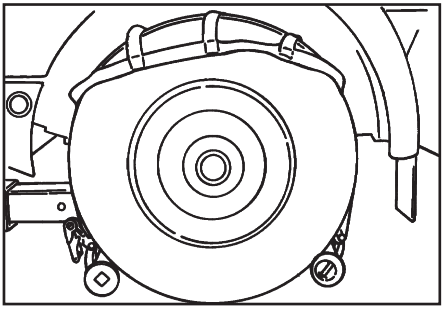

11. Remove the tie-down straps from the toolbox, and attach the hook end of the tie-down strap to the round tube behind the tire. Pull the tie-down strap up and cover the tire and attach the hook on the ratchet end of the tie-down strap to the arm in front of the tire.

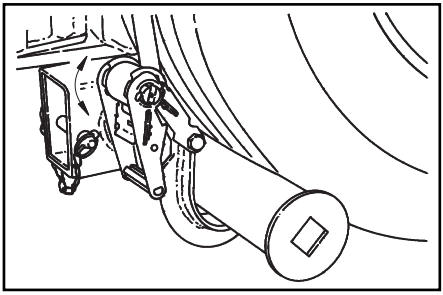

12. Take up the slack in the tie-down strap by ratcheting the takeup spool arm. Continue until the tires show some compression.

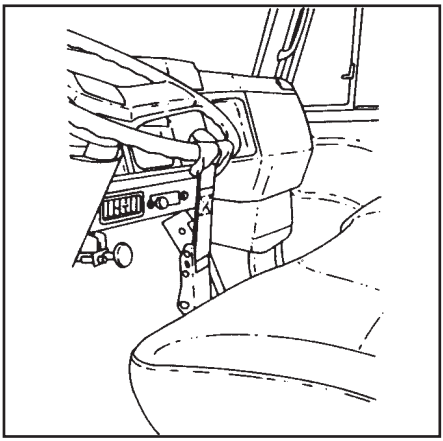

13. Always secure the steering wheel of the casualty vehicle with a steering wheel strap for any front or rear end tow.

14. With the casualty vehicle in neutral and the parking brake released, the underlift can be raised, lowered, extended or retracted. All of these movements are hydraulically controlled.

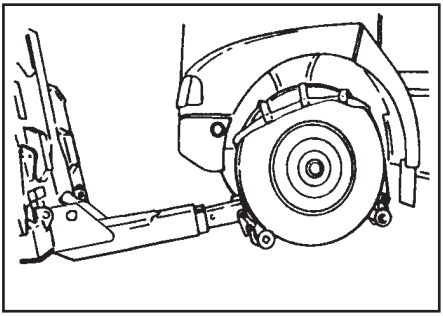

15. Retract the underlift until the casualty vehicle is as close as possible, for the best weight loading, about three (3) to four (4) feet from the back of the recovery vehicle. Leave enough room to maneuver around corners without corner binding or causing contact between the recovery and casualty vehicles.

⚠ CAUTION

Be sure that the fly boom is extended at least four (4) in. from the middle boom section to ensure unobstructed crossbar pivoting.

16. Raise the casualty vehicle into towing position observing the far end for sufficient ground clearance.

NOTICE

When towing, position the Underlift Boom as close to horizontal as possible for improved towing turning radius and maneuvering. This will also prolong the life of your underlift and pivot pin.

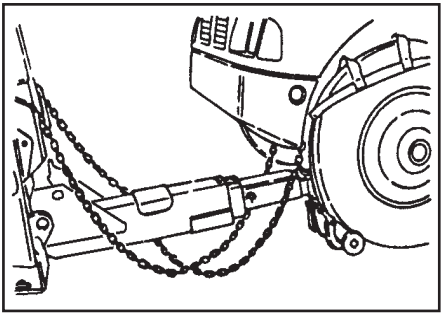

17. Be sure to maintain sufficient ground clearances with the bottom of the casualty vehicle.
18. Attach the safety chains to the casualty vehicle.
19. Attach auxiliary D.O.T. towing lights to the casualty vehicle.
20. Hook-up and connect air and braking systems. Follow the casualty vehicle chassis manufacturer's instructions.
21. Use secondary tie-down chains or straps to tie down the casualty vehicle. Fit the secondary tie-downs to the axle (not to any part of the suspension or body which will rise and fall with the suspension) arranged so as to hold the wheel down in the grid and prevent it from moving up, forwards, or backwards. Use load binders as required.

4.8 TRAILER 5TH WHEEL PLATE AND PINTLE HOOK BALL HITCH ADAPTER (OPTIONAL)

DO NOT EXCEED THE FOLLOWING RATINGS:

5TH WHEEL PLATE

LIFTING CAPACITY ..... 15,000 lbs.

TOWING CAPACITY ..... 25,000 lbs.

PINTLE HOOK BALL HITCH

2 IN. BALL HITCH ..... 10,000 lbs. (GTW)

PINTLE HOOK ..... 16,000 lbs. (GTW)

GROSS TRAILER WEIGHT .... 3,000 lbs.

MAXIMUM VERTICAL LOAD

GROSS TRAILER WEIGHT (GTW) - THE MAXIMUM TRAILER WEIGHT WITH LOAD.

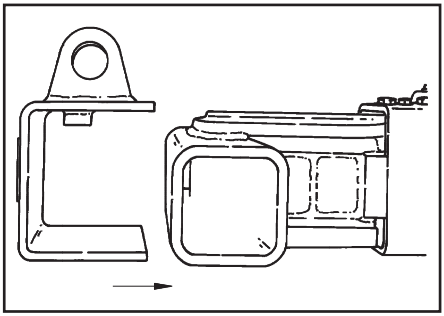

1. Slide the 5th wheel plate adapter onto the crossbar pivot of the underlift. The 5th wheel adapter plate is stored in the toolbox.

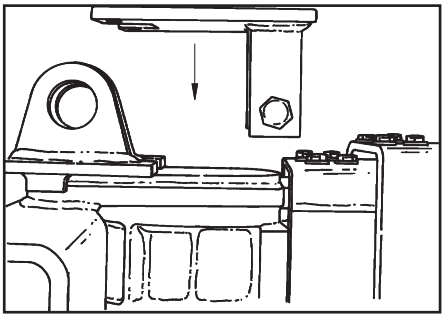

2. Install the keeper bracket down onto the crossbar pivot adapter.

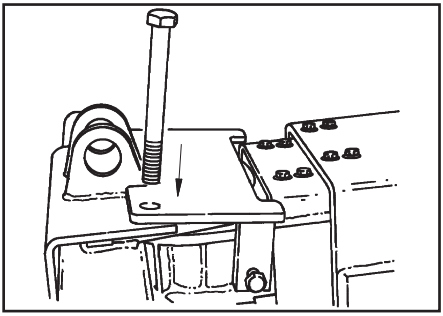

3. Install the retaining bolts thru the keeper bracket and into the adapter. Using a wrench, tighten the retaining bolts until snug.

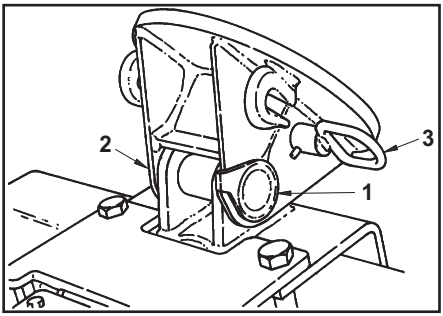

4. Install the 5th wheel plate onto the adapter with the attaching pin (1). Secure the attaching pin with the linchpin (2).

5. Remove the king pin locking pin (3) from the 5th wheel plate and position the recovery vehicle in front of the casualty vehicle and in-line with the king pin of the casualty vehicle.

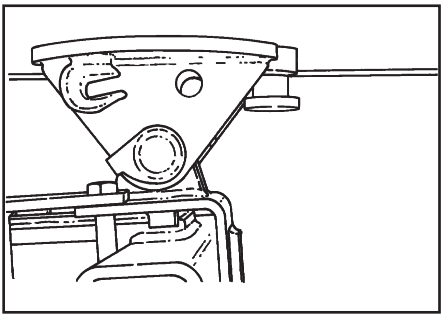

6. Extend the underlift boom and 5th wheel attachment up to the king pin of the casualty vehicle.

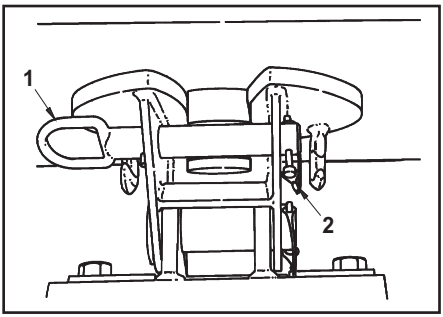

7. Engage the 5th wheel plate with the king pin. Install the king pin locking pin (1) and linchpin (2).

8. Connect the air lines from the recovery vehicle to the casualty trailer to release the trailer brakes.

9. Attach the safety chains.

10. Raise the trailer jack stands.

4.9 REAR HYDRAULIC OUTRIGGERS/SPADES

Your JD60 IND is equipped with rear hydraulic outriggers/spades. The outriggers/spades serve two purposes. First, they may be used as a chassis support when lifting heavy loads which would otherwise cause the front axle of the vehicle to lift off the ground. Second, they can be used to provide a resistance to winching forces.

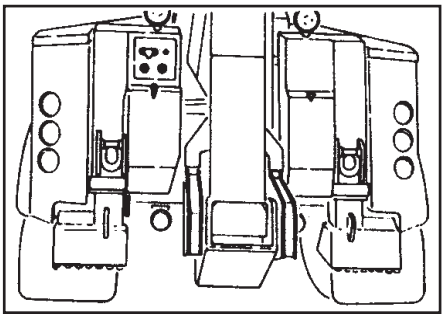

1. Position the recovery vehicle as close as possible to the work area. Set the parking brakes, place the transmission in neutral and chock the wheels.
2. Using the controls, lower the outriggers/spades to the ground. The outriggers/spades work independently from each other so that they can be used on uneven ground.

⚠ WARNING

Area must be clear of feet when lowering the rear outriggers/spades.

⚠ CAUTION

Do not move the recovery vehicle with the outriggers/spades on the ground or damage to the chassis can occur.

4.10 INTEGRAL SPADES

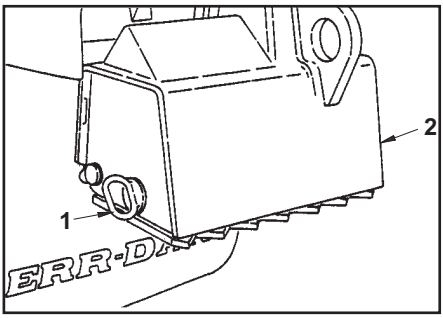

1. Remove the retaining pin (2) and spade pin (1).

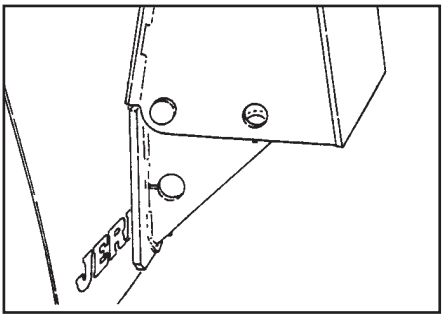

2. Allow the integral spade to swing down exposing the spade blades.

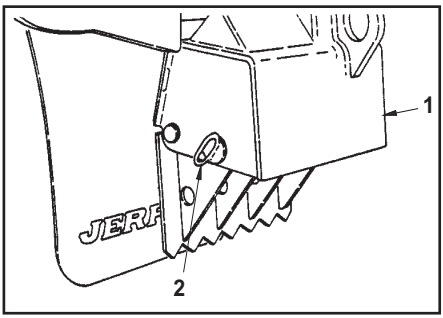

3. Line up holes and insert spade pin (2) and retaining pin (1).

NOTICE

When the spade is on the ground the eye plate on the back side of the stabilizers can be used for the attachment of snatch blocks or to terminate the wire rope hook during winching operations.

⚠ WARNING

Area must be clear of feet when lowering the rear outrigger/spades.

⚠ CAUTION

Do not move the recovery vehicle with the outriggers/spades on the ground or damage to the recovery vehicle can occur.

⚠ CAUTION

Do not use spades on pavement or concrete. Damage to the pavement or concrete may result.

4.11 USE OF THE LOAD CHART

Load Charts are provided inside the rear compartment door on both sides of the wrecker body. To properly use the load chart the operator must first determine and/ or have the following:

1. The proper load Chart(s).
2. Weight of the load being lifted.
3. Load placement information:
   a. Angle of boom needed for recovery of the load.
   b. DISTANCE from the rear tailboard of the wrecker to where the casualty vehicle is located.
4. On the load chart, find the line for the angle and follow it over to the distance.
5. The number in the load zone where the two cross is the maximum capacity for this lift. If the two cross at a division between zones, the smaller number must be used.

The number in the load zone must be equal to or greater than the weight of the load to be lifted. Determine the limits of the load zone on the load chart and keep within these limits.

Load Indicator Locations

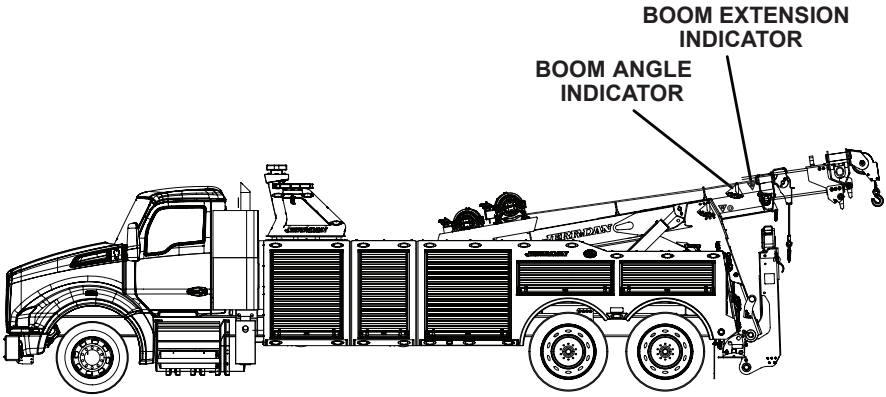

SAMPLE LOAD CHART

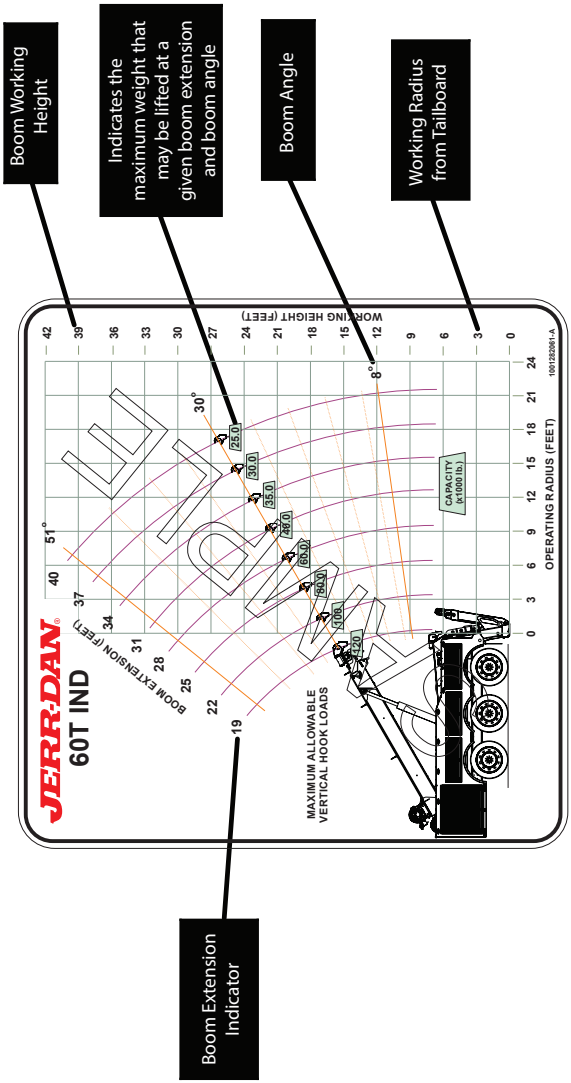

Note: This is a sample load chart only! DO NOT use this chart; use the one on the unit.

EXAMPLE

Below are examples with various conditions you may encounter and whether or not the load may be lifted.

	LOAD WEIGHT	BOOM ANGLE	BOOM LENGTH	OK to Lift
1	28,000 lb	30°	40 ft	NO
2	25,000 lb	30°	40 ft	Yes
3	30,000 lb	30°	37 ft	Yes
4	42,000 lb	30°	31 ft	NO
5	80,000 lb	30°	25 ft	Yes

4.12 WRECKER BOOM OPERATION

The wrecker boom allows the operator to perform recovery tasks that cannot be performed in any other way. You must know the weight and load center of every load you lift.

When positioning the recovery vehicle take advantage of the leverage of the wrecker boom. A vertical lift is the best and most efficient, so attempt to place the wrecker boom over the casualty vehicle. Place the recovery vehicle as close as possible to the casualty vehicle. A shorter wrecker boom extension will result in less rear axle loading. When pulling, align the recovery vehicle with the work so that the direction of pull is in line with the length of the truck. Always use more stabilizing lines than pull lines.

⚠ WARNING

If the front wheels of the recovery vehicle raise completely from the ground, stop all operation and reposition the recovery vehicle in order to take advantage of the leverage of the wrecker boom.

⚠ WARNING

Do not exceed the working limit of the wire rope. Use snatch blocks and multiple lines to reduce the load on the wire rope. Always apply an equal load in the opposite direction of the pull to stabilize the load.

When making a heavy lift or pull with the wrecker boom, the following steps should be taken:

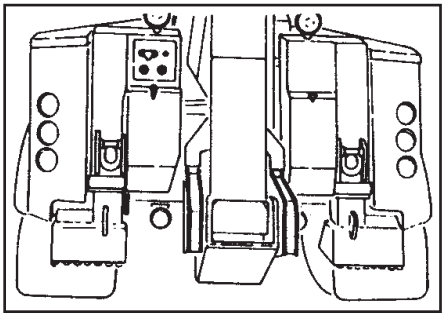

1. Position the recovery vehicle as close as possible to the casualty vehicle. Set the parking brakes, place the transmission in neutral and chock the wheels.

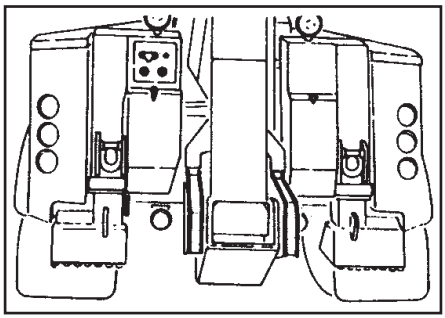

2. Confirm that the recovery vehicle is positioned properly and rests on firm ground. The rear outrigger/ spades can be lowered to provide additional support as required.

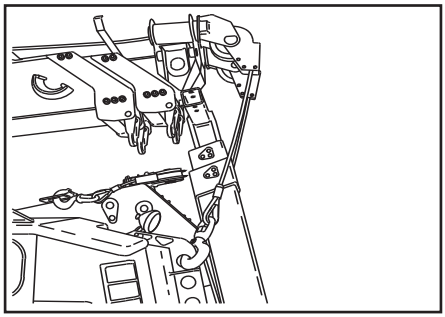

3. Unhook the wire ropes from their stored position. Moving the wrecker boom with the wire ropes hooked can result in damage to both the wire ropes and the boom.

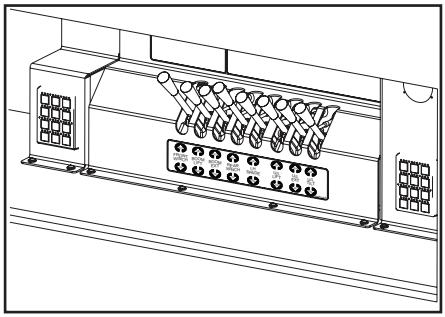

4. Using the winch control levers, unwind some wire rope from the winches to relieve the pressure on the winch free-spool device

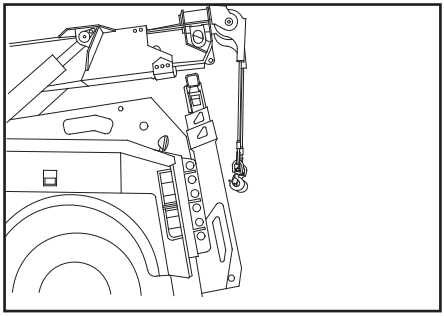

5. Position the boom head by using the boom up, down, in and out levers as necessary.

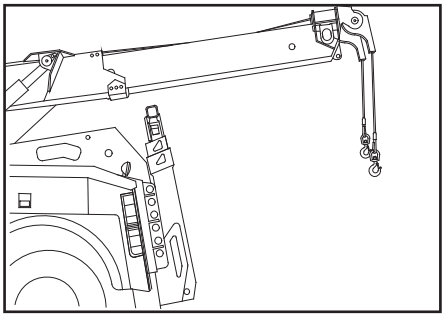

6. Manually, “free-spool” enough wire rope to make the hook-up being sure that a minimum of five (5) wraps remains on the cable drums.

⚠ CAUTION

To avoid birdnesting and premature failure of the wire rope, always keep tension on the wire rope when winding or unwinding.

7. Make the hook-up in such a way as to afford an even pull on both wire ropes. Ensure not to over load one wire rope during hook placement.

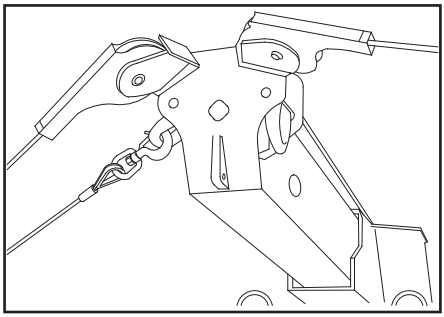

8. DO NOT EXCEED THE WORKING LIMIT OF THE WIRE ROPE. Wire rope ratings can be found on the placard on your unit or in Section 7.1 of this manual. If a heavy lift or pull is to be made exceeding the wire rope working limits, additional cable lines will be necessary.

9. Always use more stabilizing lines than pull lines. When making a recovery and pulling to the side, always apply an equal or lesser load in the opposite direction of the pull to stabilize the load.

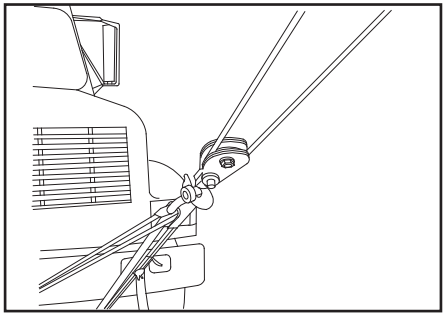

10. The use of snatch blocks and multiple lines will allow you to pull and stabilize the recovery vehicle.

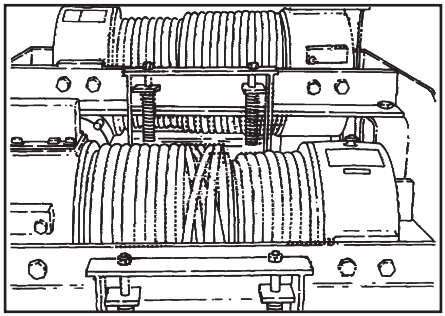

11. Activate the winch free-spool at the controls to re-engage both wrecker boom winches. Slowly take up the slack in the wire ropes. Inspect the hook-up points for slippage before continuing the lift or pull. Control each winch to ensure wire ropes are stressed evenly. **As the wire rope is retrieved, be sure it doesn't crisscross on the spool.**

⚠ WARNING

Swinging a load will cause the load to swing away from the machine and may cause instability.

12. Complete the lift or pull. Ensure the casualty vehicle is placed in a stable location where it won't slip or roll before disconnecting recovery chains/slings.

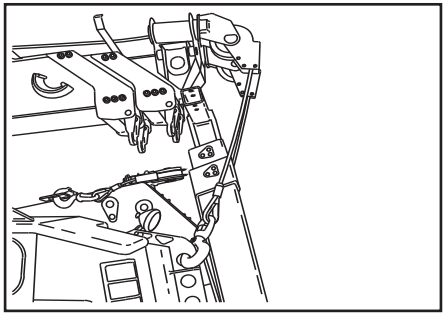

13. Using the winch controls, unwind enough wire rope to remove the hooks or chains and remove them carefully.

14. Rewind both wire ropes and take this opportunity to inspect them for damage. Keep tension on the wire rope while respooling.

15. Retract and lower the wrecker boom to normal horizontal position and secure up any loose wire rope.

⚠ CAUTION

Don’t stress the wire rope by over retrieving or tightening and exceeding the working limit. Over stressing the wire rope beyond its working limit can cause damage resulting in premature wire rope failure.

4.13 SHUT DOWN FOR TRAVEL

To shut down the recovery vehicle from recovery operations, the procedures are as follows:

1. Ensure that the wrecker boom is retracted.
2. Ensure that the wrecker boom is lowered to stowed position.
3. Ensure that the underlift boom is retracted.
4. Ensure that the underlift boom is raised with sufficient ground clearance for travel.
5. Ensure that the Power Take Off (PTO) is disengaged. See PTO operator's manual.

SECTION 5 - EMERGENCY PROCEDURES

5.1 LOWERING/RETRACTING OF THE WRECKER BOOM

In the event of total loss of engine power or hydraulic pump failure with an elevated boom, the situation must be properly evaluated and dealt with on an individual basis. **Contact a local Authorized Distributor for specific instructions.**

Secure the unit using the following procedures:

⚠ WARNING

Do not retract outrigger/spades(s) with boom elevated and/or extended.

1. Clear the area around the unit of all personnel.
2. Engage the parking brake. Place the transmission control lever in “PARK”.
3. Chock front and rear wheels.
4. Section off the area with string or tape to restrict any personnel from entering the area.

5.2 RAISING/LOWERING/RETRACTING/FOLDING/ TILTING OF THE UNDERLIFT BOOM

In the event of total loss of engine power or hydraulic pump failure with an elevated boom, the situation must be properly evaluated and dealt with on an individual basis. **Contact a local Authorized Distributor for specific instructions.**

Secure the unit using the following procedures:

⚠ WARNING

Do not retract outrigger/spades(s) with boom elevated and/or extended.

1. Clear the area around the unit of all personnel.
2. Engage the parking brake. Place the transmission control lever in “PARK”.
3. Chock front and rear wheels.
4. Section off the area with string or tape to restrict any personnel from entering the area.

5.3 RAISING/RETRACTING OF THE OUTRIGGER/SPADES

In the event of total loss of engine power or hydraulic pump failure with Outrigger(s) and/or Spades extended, the situation must be properly evaluated and dealt with on an individual basis. **Contact a local Authorized Distributor for specific instructions.**

Secure the unit using the following procedures:

⚠ WARNING

Do not retract outrigger/spades(s) with boom elevated and/or extended.

1. Clear the area around the unit of all personnel.
2. Engage the parking brake. Place the transmission control lever in “PARK”.
3. Chock front and rear wheels.
4. Section off the area with string or tape to restrict any personnel from entering the area.

THIS PAGE IS INTENTIONALLY LEFT BLANK

SECTION 6 - MAINTENANCE

INTRODUCTION

Service the product in accordance with the maintenance schedule on the following pages.

Wear all the protective clothing and personal safety devices issued to you or called for by job conditions.

DO NOT wear loose clothing or jewelry that can get caught on controls or moving parts.

Clean lubrication fittings before lubricating.

Intervals shown are for normal usage and conditions. Adjust intervals for abnormal usage and conditions.

Check all lubricant levels when lubricant is cool. For ease of filling hydraulic reservoir, use a funnel with a hose or flexible tube for best results.

When performing maintenance that requires accessing the top of the truck, use only an approved ladder.

Use only safe practices when maintaining this equipment. Always shut off the engine before reaching into pinch areas.

Place Do Not Operate Tags on the ignition switch and the steering wheel before attempting to perform any service or maintenance. Remove the key and disconnect battery leads.

⚠ WARNING

CUT/CRUSH/BURN HAZARD. Do not perform service or maintenance on the machine with the engine running, with the exception of the hydraulic return filter indicator checks.

⚠ WARNING

The JD60 IND hydraulic systems operate at extremely high and potentially dangerous pressures. The operator must relieve any system pressure before disconnecting or removing and portion of the system.

6.1 MAINTENANCE AND LUBRICATION

The truck chassis itself is on a maintenance schedule recommended by the manufacturer. Follow these guidelines and protect your vehicle warranty.

There are a number of different lubricants used on your JD60 IND. The following Lubricant Chart shows the proper lubricant and the most common brands and specification which meet the requirements. Refer to Section 6.6.

The hydraulic filters located on the return side of the hydraulic tank come equipped with restriction indicator gauges. The gauge shows the condition of the filter element. When the needle reaches the red band (25 psi), the filter is starting to bypass and the element needs to be changed. Failure to change the filter element will result in premature wear and/or failure of any or all of the hydraulic components. **Only check gauge when hydraulic fluid is at operating temperature. Cold oil is more dense and will give a false indicator gauge reading**. Refer to Section 6.6.

The body of your Jerr-Dan has been built from a polypropylene material which has been carefully assembled in our factory.

To keep your polypropylene body clean and free of dirt use any non-abrasive soap or detergent that is safe to the touch. Use a soft cloth or sponge and finish with a thorough rinsing. Drying with a soft cloth or chamois will prevent spotting or streaking. To clean tough stains from the white polypropylene surfaces, a clear pipe cleaner suitable for ABS, CPVC, or PVC can be used. There are rubber plugs in the bottom of the vertical tool compartments of the body to provide water drainage when cleaning out the compartments. The roll-up doors in your body require very little maintenance, and are simple to clean. Any door with a painted surface should not be cleaned aggressively cleaned for 30 days from time of shipment. When cleaning anodized doors, use only a mild non-abravisive soap and water. The side channels should be inspected and cleaned periodically to remove the dirt and grime from inside the channels. A dry silicone spray can be applied to ensure smooth operation. DO NOT use lithium or grease to lubricate the track, these lubricants only attract dirt. The slide out chain board tracks and the pull-out/tilt down drawer tracks should be cleaned periodically and free of debris.

If the JD60 IND is mounted to the truck chassis by bolts. These bolts are torqued at the factory to 600 ft-lbs. We recommend that these bolts be re-torqued within the first 30 days and periodic inspection and retorquing of these bolts as required thereafter. Replace any broken or damaged bolts immediately. Refer to Section 6.2.

For all sling, strap, chain and lifting components refer to the manufacturer inspection and maintenance schedules.

6.2 FASTENER TORQUE SPECIFICATIONS

TIGHTENING TORQUES (FOOT-POUNDS) FOR SCREWS AND NUTS			
SIZE INCHES (MM)	GRADE 2	GRADE 5	GRADE 8
1/4 (6.350)	6	8	10
5/16 (7.938)	10	14	19
3/8 (9.525)	17	27	33
7/16 (11.112)	28	45	60
1/2 (12.700)	45	68	90
9/16 (14.288)	63	100	120
5/8 (15.875)	90	135	180
3/4 (19.050)	145	230	310
7/8 (22.225)	145	380	500
1 (25.400)	220	570	760

- All torque values shown are for bolts (cap screws) and nuts that are either zinc-plated or lubricated.
- Torques shown above apply only to screws and nuts used for assembly and installation of all carrier components, not to the chassis.
- Different torque values may be given in instructions for certain components due to short thread engagement or low-strength internal threads.
- When nuts are used, tighten nuts to torques shown (screws or bolts should be held but not turned). **Always use a calibrated torque wrench.**
- Retighten nuts of all mounting screws that secure the carrier and carrier-body within 30 days after putting the vehicle into service. Thereafter, inspect and retorque such screws and nuts every 90 days and after each job that imposes extremely heavy loads on the equipment.
- Convert ft/lbs to Nm (Newton metres) by using the following formula:

Multiply:		by:		to get:
ft/lbs	x	1.3558	=	Nm (Newton metres)

6.3 OILS AND GREASES

The following oils and greases are suitable for use with your Jerr-Dan Wrecker.

Company	Product
HYDRAULIC OILS	
1. Chevron	Clarity AW 46
2. Exxon	Univis N46
3. Mobil	Mobilfluid 424
4. Texaco	Rando HD 46
5. Kendall	AW 46
6. Citgo	Mystik AW 46
7. Amoco	AW 46
8. Conoco	Super
9. Mobil	DTE10 Excel 32 (for cold weather use)
10. Conoco	AW Hydraulic Fluid MV 32 (for cold weather use)
GREASES	
1. Drydene	HD Lithium EP2
2. Gulf	Crown EP2
3. Amoco	Amolith EP2
4. Shell	Alvania EP2
5. Texaco	Marfax EP2
6. Mobil	Mobilux EP2
7. Sunoco	Prestige EP2
WINCH	
Mobil	SAE 75W-90 Synthetic Gear Lube (or approved equivalent)

Company	Product
	WIRE ROPE
Mobile	Motor Oil (or other approved deep penetrating equivalent)

6.4 WIRE ROPE HANDLING AND INSPECTION

⚠ WARNING

Wire Rope WILL FAIL if worn-out, overloaded, misused, damaged, improperly maintained or abused.
Wire rope failure may cause serious injury or death!

Protect yourself and others:

- NEVER USE wire rope that is WORN-OUT, DAMAGED or ABUSED.
- NEVER OVERLOAD a wire rope.
- REFER TO APPLICABLE CODES, STANDARDS and REGULATIONS for INSPECTION REQUIREMENTS and REMOVAL CRITERIA.

A new wire rope requires a break in period. Run the wire rope through several cycles at low speeds gradually increasing the load on the wire rope. Drag another truck, forklift or other heavy object to induce a load on the wire rope. Make sure that the wraps of the wire rope are tight and evenly wound on the winch drum. A loose wire rope on the winch drum will cause crushing of the wire rope when heavy loads are applied.

All wire rope in continuous service should be observed during normal operation and visually inspected on a weekly basis. A complete and thorough inspection of all ropes in use must be made at least once a month and all rope which has been idle for a period of a month or more should be given a thorough inspection before it is put back into service. All inspections should be the responsibility of and performed by an appointed competent person with the training and experience to look for deterioration of the wire rope.

It is good practice, where the equipment is consistently in use, to give the rope a certain length of service, several hundred hours, several weeks or months and then renew the rope regardless of its condition. This method eliminates the risk of fatigue causing rope failure.

Any deterioration, resulting in a suspected loss of original rope strength, the wire rope should be replaced.

There are certain points along any given rope which should be given more attention than others, since some areas will be subjected to greater stresses, forces, and hazards. Some of these areas include at the winch drum, at the boom sheaves and at the end attachments.

All products are subject to age, wear and deterioration, all of which cause a reduction in the products breaking strength capacity.

The most common sign of rope deterioration and approaching failure is broken wires. Inspection criteria are specific as to the number of broken wires allowable under various circumstances. It is important that a diligent search be made for broken wires, particularly in critical areas. Inspection of wire rope ends should include hooks and thimbles.

Replace any wire ropes that have been abraded, crushed, kinked or twisted.

Wire rope should be routinely cleaned monthly of any and all debris. Grit and gravel can quickly reduce a wire ropes life. A wire rope should be well lubricated so that it can act and perform as it was designed. Lubrication keeps a wire rope flexible and free from rust.

Refer to the placard on your unit or consult the manufacturer or your local distributor for the proper replacement wire rope.

6.5 WIRE ROPE INSTALLATION

Proper Unreeling Procedures

Wire rope can be permanently damaged by improper unreeling or uncoiling practices. The majority of wire rope performance problems start here. Improper unreeling practices lead to premature rope replacement, hoisting problems and rope failure.

Place the payout reel as far away from the boom tip as is practical, moving away from the chassis. Never place the payout reel closer to the chassis than the boom point sheave. Doing so may introduce a reverse bend into the rope and cause spooling problems. Take care to determine whether the wire rope will wind over or under the drum before proceeding.

Unreeling & Uncoiling and Kinks

- **The Right Way To Unreel.** To unreel wire rope from a heavy reel, place a shaft through the center and jack up the reel far enough to clear the floor and revolve easily. One person holds the end of the rope and walks a straight line away from the reel, taking the wire rope off the top of the reel. A second person regulates the speed of the turning reel by holding a wood block against the flange as a brake, taking care to keep slack from developing on the reel, as this can easily cause a kink in the rope. Lightweight reels can be properly unreeled using a vertical shaft; the same care should be taken to keep the rope taut.

- **The Wrong Way To Unreel.** If a reel of wire rope is laid on its flange with its axis vertical to the floor and the rope unreeled by throwing off the turns, spirals will occur and kinks are likely to form in the rope. Wire rope always should be handled in a way that neither twists nor unlays it. If handled in a careless manner, reverse bends and kinks can easily occur.

- **The Right Way To Uncoil.** There is only one correct way to uncoil wire rope. One person must hold the end of the rope while a second person rolls the coil along the floor, backing away. The rope is allowed to uncoil naturally with the lay, without spiraling or twisting. Always uncoil wire rope as shown.

- **The Wrong Way To Uncoil.** If a coil of wire rope is laid flat on the floor and uncoiled by pulling it straight off, spirals will occur and kinking is likely. Torsions are put into the rope by every loop that is pulled off, and the rope becomes twisted and unmanageable. Also, wire rope cannot be uncoiled like hemp rope. Pulling one end through the middle of the coil will only result in kinking.

- **Kinks.** Great stress has been placed on the care that should be taken to avoid kinks in wire rope. Kinks are places where the rope has been unintentionally bent to a permanent set. This happens where loops are pulled through by tension on the rope until the diameter of the loop is only a few inches. They are also caused by bending a rope around a sheave having too severe a radius. Wires in the strands at the kink are permanently damaged and will not give normal service, even after apparent “restraightening.”

Drum Winding

When wire rope is wound onto a sheave or drum, it should bend in the manner in which it was originally wound. This will avoid causing a reverse bend in the rope. Always wind wire rope from the top of the one reel onto the top of the other. Also acceptable, but less so, is re-reeling from the bottom of one reel to the bottom of another. Re-reeling may also be done with reels having their shafts vertical, but extreme care must be taken to ensure that the rope always remains taut. It should never be allowed to drop below the lower flange of the reel. A reel resting on the floor with its axis horizontal may also be rolled along the floor to unreel the rope.

Wire rope should be attached at the correct location on a flat or smooth-faced drum, so that the rope will spool evenly, with the turns lying snugly against each other in even layers. If wire rope is wound on a smooth-face drum in the wrong direction, the turns in the first layer of rope will tend to spread apart on the drum. This results in the second layer of rope wedging between the open coils, crushing and flattening the rope as successive layers are spooled.

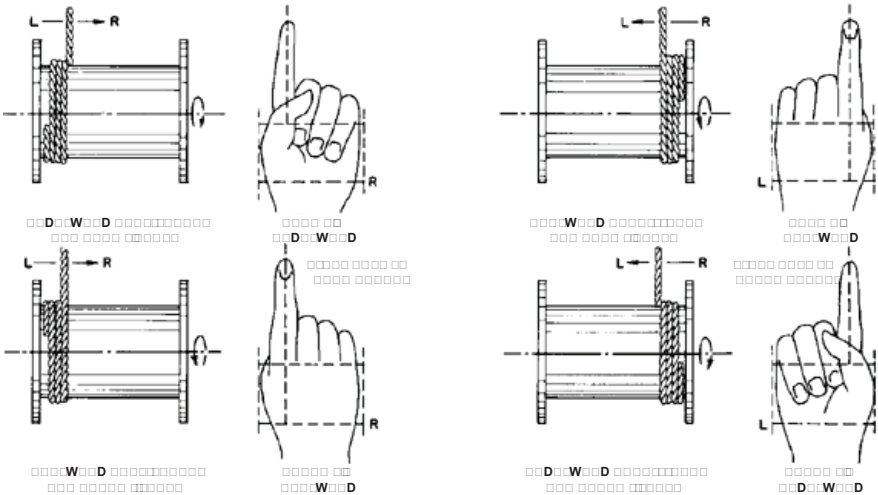

A simple method of determining how a wire rope should be started on a drum is shown above. The observer stands behind the drum, with the rope coming towards him. Using the right hand for right-lay wire rope, and the left hand for left lay wire rope, the clenched fist denotes the drum, the extended index finger the oncoming rope.

Keep Wraps Tight

The end of the rope must be securely and evenly attached to the drum anchorage point by the method recommended by the equipment manufacturer. At least five wraps of wire rope must remain on the drum as dead wraps when the rope is unwound during normal operations. Locate the dead end rope anchorage point on the drum in relation to the direction of the lay of the rope. Do not use an anchorage point that does not correspond with the rope lay. Mismatching rope lay and anchorage point will cause the wraps to spread apart from each other and allow the rope to cross over on the drum. Very gappy winding will occur resulting in crushing damage in multilayer applications.

Back tension must be continually applied to the payout reel and the crewman installing the rope must proceed at a slow and steady pace whether the drum is smooth or grooved. Regardless of the benefits of a grooved drum, tension must be applied to ensure proper spooling. An improperly installed rope on a grooved drum will wear just as quickly as an improperly installed rope on a smooth drum. If a wire rope is poorly wound and as a result jumps the grooves, it will be crushed and cut under operating load conditions where it crosses the grooves.

Every wrap on the first or foundation layer must be installed very tightly and be without gaps. Careless winding results in poor spooling and will eventually lead to short service life. The following layers of rope must lay in the grooves formed between adjacent turns of the preceding layer of rope. If any type of overwind or crosswinding occurs at this stage of installation and is not corrected immediately, poor spooling and crushing damage will occur.

On a multilayer spooling drum be sure that the last layer remains at least two rope diameters below the drum flange top. Do not use a longer length than is required because the excess wire rope will cause unnecessary crushing and may jump the flange. Loose wraps that occur at any time must be corrected immediately to prevent catastrophic rope failure.

The use of a mallet is acceptable to ensure tight wraps, however a steel-faced mallet should be covered with plastic or rubber to prevent damage to the rope wires and strands.

6.6 JD60 IND LUBRICATION POINTS

The following lubrication charts are located inside the tool box door on the driver's side of the HDL body.

LUBRICATION DIAGRAM

LUBRICATION INTERVAL	ID No.	IDENTIFICATION	SERVICE	LUBRICATION
VENDOR SPECIFIED BREAK-IN PERIOD	1	WINCH GEAR CASE LUBE	DRAIN & FILL	SEE NOTE 1
WEEKLY	2	WIRE ROPE ASSEMBLY	LUBRICATE	SEE NOTE 2
50 ⌛ OR SEMI-MONTHLY	3	PADS, NYLATRON / STEEL	COAT	MPG & SEE NOTE 3
	4	WINCH GEAR CASE BREATHER / PLUGS	CHECK	-
	5	PIVOT, WRECKER BOOM	LUBRICATE	MPG W/ MOLY
	6	CYLINDER, WRECKER BOOM LIFT	LUBRICATE	MPG W/ MOLY
100 ⌛ OR MONTHLY	1	WINCH GEAR CASE LUBE	CHECK LEVEL	SEE NOTE 1
	7	CYLINDER, WRECKER BOOM EXTEND	LUBRICATE	MPG
	8	D-RING	LUBRICATE	MPG
	9	SWIVEL, SHEAVE HEAD WRECKER BOOM / DRAG WINCH	LUBRICATE	MPG
	10	PIN, SHEAVE WRECKER BOOM / DRAG WINCH	LUBRICATE	MPG
	11	CYLINDER, UNDERLIFT TILT	LUBRICATE	MPG
	12	PIVOT, UNDERLIFT	LUBRICATE	MPG
	13	CYLINDER, UNDERLIFT EXTEND	LUBRICATE	MPG
	14	PIVOT, CROSSBAR	LUBRICATE	MPG
	15	CYLINDER, OUTRIGGER/SPADE EXTEND	LUBRICATE	MPG
	16	CYLINDER, UNDERLIFT LIFT	LUBRICATE	MPG
	17	PIVOT, UNDERLIFT TILT	LUBRICATE	MPG
	18	PIVOT, SPADE CLAW	LUBRICATE	MPG
	19	HYDRAULIC RESERVOIR	CHECK LEVEL	HYDRAULIC FLUID
	20	LINKAGE, CONTROL VALVE HANDLES	LUBRICATE	MPG
250 ⌛ OR SEMI-ANNUALLY	21	FILTER, HYDRAULIC RETURN	REPLACE	-
250 ⌛ OR VENDOR SPECIFIED	1	WINCH GEAR CASE LUBE	DRAIN & FILL	SEE NOTE 1
500 ⌛ OR VENDOR SPECIFIED				
1000 ⌛ OR ANNUALLY	19	HYDRAULIC RESERVOIR	DRAIN & FILL	HYDRAULIC FLUID
	22	HYDRAULIC RESERVOIR MAGNETIC PLUG	CLEAN	-
	23	HYDRAULIC RESERVOIR STRAINER	CLEAN	-
MPG	HEAVY DUTY MULTI-PURPOSE EP LITHIUM COMPLEX NLGI No. 2 GREASE.			
HYDRAULIC FLUID	USE MOBIL 424 MULTI-VISCOSITY HYDRAULIC FLUID. FOR EXTREME LOW TEMPERATURE APPLICATIONS USE MOBIL DTE 10 EXCEL 32.			

NOTES:

1. REFER TO WINCH OPERATING / MAINTENANCE MANUAL FOR RECOMMENDED GEAR LUBRICANT FOR SPECIFIED AMBIENT TEMPERATURE RANGE.
2. REFER TO MAINTENANCE MANUAL FOR RECOMMENDED WIRE ROPE LUBRICATION.
3. TO GREASE TOP WEAR PADS INSIDE WRECKER BOOM, USE GREASE GUN WITH NEEDLE NOSE ADAPTER DISTRIBUTE GREASE ON TOP OF BOOM INTERIOR WHERE WEAR PADS RUN.
4. NOT ALL FEATURES SHOWN ARE OFFERED ON ALL MODELS.

JD60 IND LUBRICATION POINTS

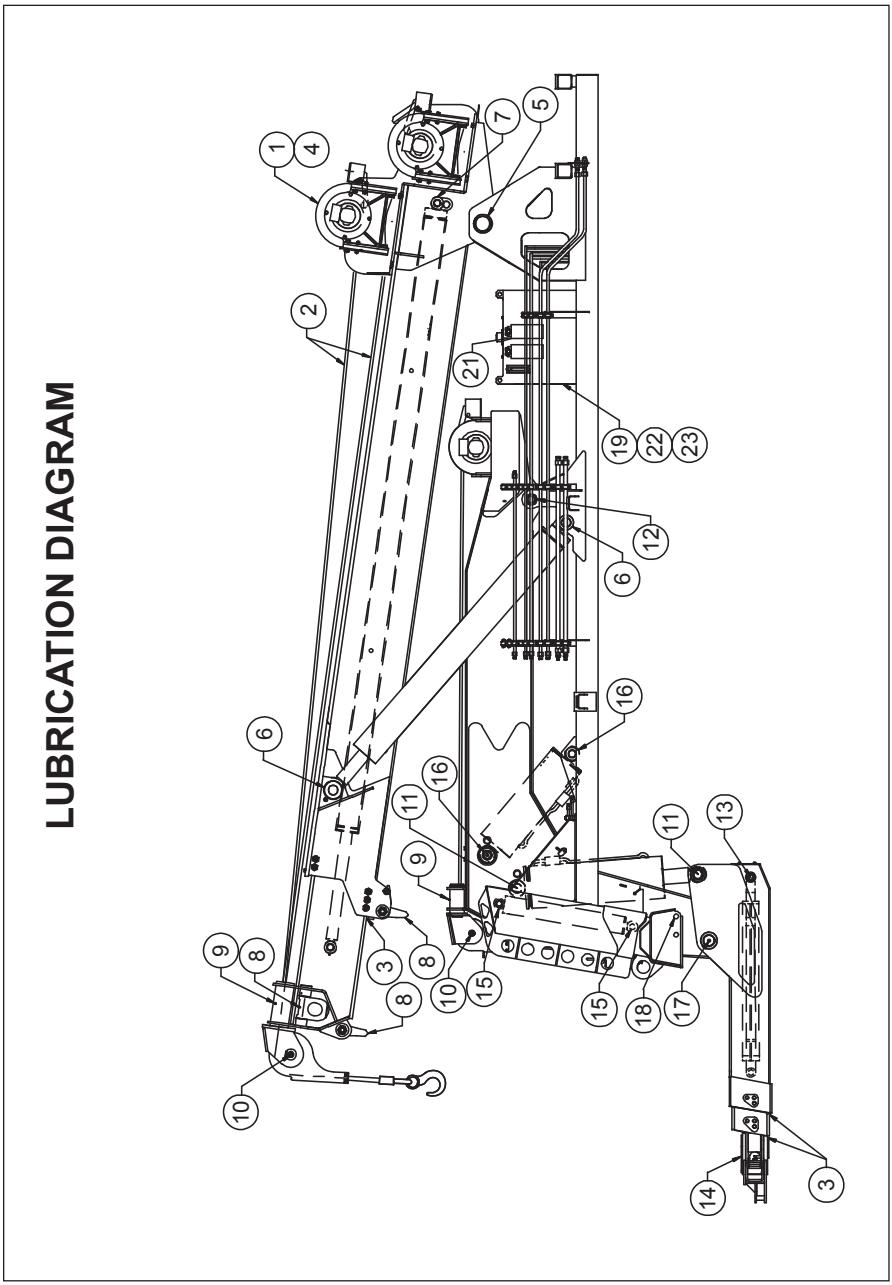

JD60 IND LUBRICATION POINTS

Note: *The following numbers correspond to those shown on the lubrication chart on Page 6-10.*

1. Boom Winch Gear Case

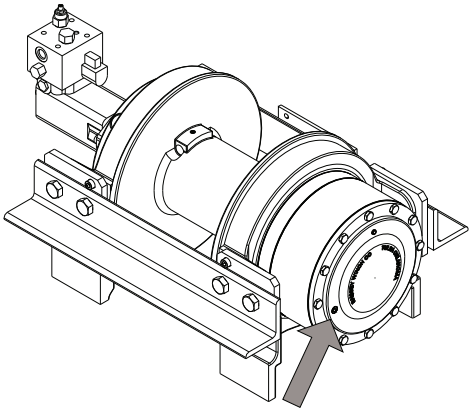

Lube Point(s)	–	Fill Plug
Lube	–	Reference winch manufacturers manual.
Interval	–	Check level every 100 hours or monthly Change every 250 hours

17. Hydraulic Reservoir Oil Level

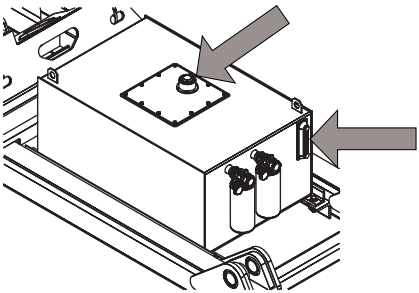

Lube Point(s)	–	Sight Glass/Fill Cap
Capacity	–	61 gallons
Lube	–	Mobilefluid 424
Interval	–	Check level every 100 hours or monthly Change every 1000 hours or annually

19. Hydraulic Return Filter

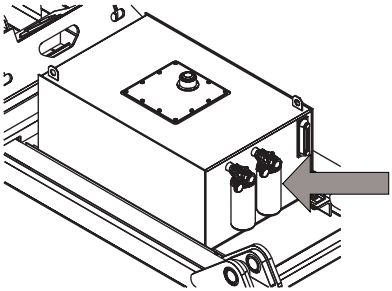

Lube Point(s) – Replaceable Elements
Interval – Change every 250 hours or Semi Annually
Or as indicated by condition indicator gauges

20. Hydraulic Reservoir Strainer

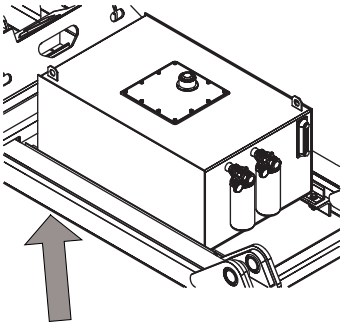

Lube Point(s) – Magnetic Plug
Interval – Clean every 1000 hours or Annually

21. Hydraulic Reservoir Magnetic Plug

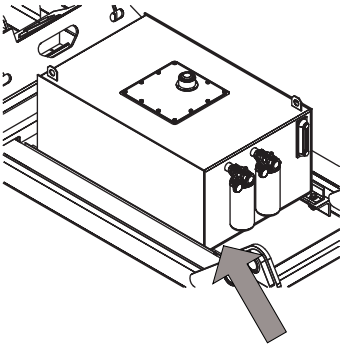

Lube Point(s) – Magnetic Plug
Interval – Clean every 1000 hours or Annually

6.7 TRUCK BATTERY LOCATIONS

If access to the truck batteries is needed, they can be found in the location indicated below.

JFB Body:

Under the access panel in the top of the front tunnel tool compartment.

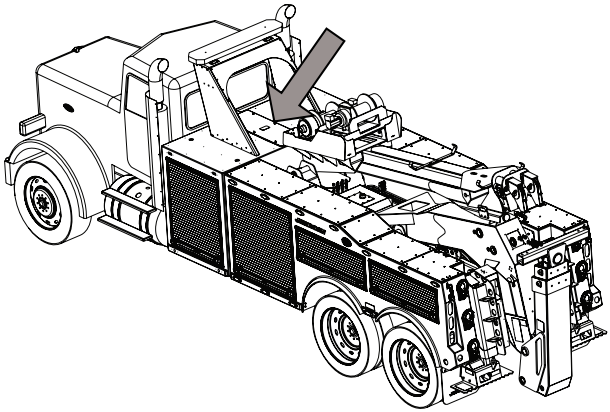

6.8 TROUBLE SHOOTING

You probably won't require anything but preventive maintenance to keep your JD60 IND running, however, the following chart should help you isolate and correct minor problems if they occur with use. Any service work on the hydraulic system should be performed by qualified mechanics.

HYDRAULIC SYSTEM

Problem	Cause	Solution
Slow operation	a. Low engine RPM	a. Speed up engine
	b. Low oil level	b. Check level and fill with the specified oil
	c. Blocked or restricted hose	c. Inspect: remove blockage
	d. Dirty hydraulic oil	d. Drain, flush and refill with clean oil, replace filter
	e. Hydraulic pump worn	e. Rebuild or replace
	f. Frozen hydraulic lines	f. Thaw and remove water
Valve handle sticks tight or frozen	a. Insufficient lubrication	a. Lubricate per lube chart
	b. Broken centering spring or clogged with foreign material	b. Inspect, clean or replace
Valve leaks	a. Defective seals	a. Inspect and replace
Cylinder leaks	a. Defective seals or rods	a. Inspect and replace
Erratic cylinder function	a. Air in the system	a. Cycle hydraulic system 10 to 15 times to remove air
	b. Defective pump (pulsating)	b. Replace if necessary
Remote hand controller fails to respond	a. Electric power turned off	a. Turn on CONTROL power switch in cab
Oil heating up	a. Oil Cooler not working	a. Repair or replace

TROUBLESHOOTING

P.T.O. FUNCTIONING IMPROPERLY

Problem	Cause	Solution
Intermittent operation	a. Poor Electrical connection	a. Check electrical connections
Rattling noise in P.T.O.	a. P.T.O. backlash too loose (Consult P.T.O. Manual)	a. Shims must be removed
Howling noise in P.T.O.	a. P.T.O. backlash too tight (Consult P.T.O. Manual)	a. Shims must be added
Gear oil leak between P.T.O. and pump	a. Defective shaft seal	a. Remove and replace
P.T.O. will not engage or disengage	a. Electrical circuit wiring b. Solenoid Valve malfunctioning c. Blown fuse	a. Check/repair electrical wiring problem circuit. b. Repair or replace c. Replace fuse

HYDRAULIC PUMP

Problem	Cause	Solution
Pump noisy (Cavitation)	a. Low oil supply b. Heavy oil c. Dirty oil filter d. Restriction in suction line e. Pump worn	a. Fill to proper level b. Fill with proper oil (See chart) c. Replace filter d. Clean out and remove e. Repair or replace
Pump slow or fails to respond	a. Low oil supply b. Cold Thick Oil	a. Fill to proper level b. Drain and refill with a low temperature oil
Oil heating up	a. Foreign material lodged in relief valve filter b. Using too light oil c. Dirty oil d. Oil level too low e. Pump worn (slippage)	a. Inspect and remove/replace b. Drain and refill with clean oil c. Drain, flush and refill with clean oil/replace filter d. Fill to proper level e. Repair or replace

TROUBLESHOOTING

HYDRAULIC PUMP

Problem	Cause	Solution
Oil foaming	a. Air leaking into suction line	a. Tighten all connections
	b. Wrong kind of oil	b. Drain and refill with non-foaming type of hydraulic oil (See lube chart) Replace filter
	c. Oil level too low	c. Refill to proper level
Hydraulic oil leak between P.T.O. and pump	a. Defective shaft seal	a. Replace shaft seal
Pump leaks at front and rear covers	a. Defective seals	a. Replace seals

WINCH FUNCTIONING IMPROPERLY

Problem	Cause	Solution
Winch screeches during operation	a. Insufficient lubrication	a. Lubricate per lube chart
Winch will not pull load or take in wire rope	a. Free-spooling device not engaged	a. Engage
	b. Sheared keys or broken coupling	b. Inspect or replace
	c. Hydraulic pump worn	c. Inspect and replace
Free-spool device	a. No air pressure	a. Turn truck on
	b. Insufficient air pressure	b. Allow truck to run
	c. Defective pressure switch	c. Inspect and replace
	d. Leaking air line	d. Inspect and replace
Cable tensioner device non-functional	a. No air pressure	a. Turn truck on
	b. Insufficient air pressure	b. Allow truck to run
	c. Defective pressure switch	c. Inspect and replace
	d. Leaking air line	d. Inspect and replace
Cable speed shift non-functional	a. No air pressure	a. Turn truck on
	b. Insufficient air pressure	b. Allow truck to run
	c. Defective pressure switch	c. Inspect and replace
	d. Leaking air line	d. Inspect and replace

TROUBLESHOOTING

REMOTE HAND CONTROLLER

Problem	Cause	Solution
Transmitter not working. LED not on or blinking.	a. Electric power turned off b. Discharged Battery	a. Turn on CONTROL power switch in cab or control station b. Replace Battery
Transmitter not working. LED not on or blinking	a. Discharged Battery b. Receiver power turned off c. Out of range d. Communication error	a. Replace Battery b. Check receiver power input c. Make sure transmitter is in range of receiver d. Make sure transmitter and receiver are matched.
Poor Range	a. Discharged Battery b. Communication error c. Communication error	a. Replace Battery b. Obstructions, interference, and adverse weather can affect range c. Check receiver antenna and cable connections
Does not operate correctly	a. Communication error	a. Check/ Verify antenna Wiring

SECTION 7 - SPECIFICATIONS

7.1 PRODUCT SPECIFICATIONS

JD60 IND

OPERATING SPECIFICATIONS AND PERFORMANCE DATA

DO NOT EXCEED THE FOLLOWING RATINGS:

BOOM RATING:
SAE J2512 Rating - Boom elevated at 30° Angle [1]

Retracted	120,000 lbs.[5]
Mid	40,000 lbs.[5]
Extended	25,000 lbs.[5]

WRECKER BOOM WINCH RATING:

Each Drum (Two Speed, Variable Control)	50,000 lbs.[2]

WRECKER BOOM WIRE ROPE:

Working Limit Each Line	16,800 lbs.
Construction	6 x 37 EIPS IWRC
Diameter	3/4 inch
Standard Length	250 Feet

UNDERLIFT RATING: (Reference underlift serial number tag)

HDL1200-530 IND

Full Retracted	53,000 lbs.[3]
Full Extended	17,000 lbs.[3]
Tow Rating	80,000 lbs.[3]

HDL1200-565 IND

Full Retracted	56,500 lbs.[3]
Full Extended	17,600 lbs.[3]
Tow Rating	80,000 lbs.[3]

UNDERLIFT DRAG WINCH RATING: (Optional)

Each Drum (2 Speed, Variable Control)	35,000 lbs[2]

UNDERLIFT WIRE ROPE: (Optional)

Working Limit Each Line	11,700 lbs
Construction	6 x 37 EIPS IWRC
Diameter	5/8 in
Standard Length	250 ft

UNDERLIFT WIRE ROPE: (Optional)

Working Limit Each Line	16,800 lbs
Construction	6 x 37 EIPS IWRC
Diameter	3/4 in
Standard Length	200 ft

TIRE LIFT RATING (Reference serial number tag for proper ratings):

HDTL
- Lifting Capacity (Each Arm) ..... 7,000 lbs.
- Lifting Capacity (Total) ..... 14,000 lbs.
- Towing Capacity (Structural Maximum) [4] ..... 80,000 lbs.

SHDTL
- Lifting Capacity (Each Arm) ..... 12,500 lbs.
- Lifting Capacity (Total) ..... 25,000 lbs.
- Towing Capacity (Structural Maximum) [4] ..... 80,000 lbs.

5th WHEEL PLATE (OPTION):
- Lifting Capacity ..... 15,000 lbs.
- Towing Capacity ..... 25,000 lbs.

PINTLE HOOK BALL HITCH (OPTION):
- 2 in. Ball Hitch ..... 10,000 lbs. (GTW)
- Pintle Hook ..... 16,000 lbs. (GTW)

GROSS TRAILER WEIGHT ..... 3,000 Maximum Vertical Load

[1] SAE J2512: Surface Vehicle Recommended Practices - Towing Equipment Ratings and Practices

[2] SAE J706: Surface Vehicle Recommended Practices - Rating of Winches

[3] Rating Using Axle And Spring Lift Tools

[4] THE TOWING CAPACITY SHOULD NOT EXCEED THE GROSS COMBINED WEIGHT RATING (GCWR) OF THE TOWING VEHICLE OR 80,000 LBS. STRUCTURAL CAPACITY OF THE TIRE LIFT, WHICHEVER IS LOWER.

[5] The Maximum Structural Limit and Maximum Rated Load are based on lifting the load vertically directly over the rear with the swing lock engaged. The rear spades and outriggers must be properly set on firm level surface. Proper rigging for the wire rope limits must be utilized. Exceeding the Maximum Structural Limit may cause permanent deformation of components.

MAXIMUM LIFTING CAPACITY - THE MAXIMUM LOAD THAT CAN BE LIFTED.

GROSS COMBINED WEIGHT RATING (GCWR) - THE VALUE SPECIFIED BY THE VEHICLE MANUFACTURER AS GCW.

GROSS TRAILER WEIGHT (GTW) - THE MAXIMUM TRAILER WEIGHT WITH LOAD.

GROSS COMBINED WEIGHT (GCW) - ACTUAL WEIGHT OF THE HDL VEHICLE AND RECOVERED VEHICLE INCLUDING EQUIPMENT, DRIVER, PASSENGER, FUEL AND PAYLOAD (EVERYTHING THAT MOVES WITH THE VEHICLE).

NOTE

These ratings apply to the structural design of the JD60 IND only. They might be limited by the axle rating and gross vehicle weight rating of the truck chassis.

The payload and towing capacity of any towing vehicle must meet the following:

- The actual payload on the towing vehicle must not exceed the posted rating and the towed vehicle load must not exceed the posted lift / towing ratings.
- The total weight of the towing vehicle (cab chassis, body, payload, driver, passenger(s), tools, fuel, etc.) and the towed vehicle load must not exceed the GVWR (Gross Vehicle Weight Rating) of the towing vehicle.
- The total weight of the towing vehicle and a towed vehicle load must be distributed so that each axle's GAWR (Gross Axle Weight Rating) is not exceeded.
- The total weight of the towing vehicle and towed vehicle (everything that moves with the towing vehicle) must not exceed the GCWR (Gross Combination Weight Rating) of the towing vehicle.

Staying within these ratings is necessary to maintain the safety and performance of the towing vehicle.

CHECK TRUCK MANUAL FOR SPECIFIC GVW & AXLE RATINGS. ALSO LOOK AT THE CERTIFICATION DECAL AFFIXED TO DRIVER'S SIDE DOOR JAMB, HINGE PILLAR OR LATCH POST AND THE STRUCTURAL CAPACITIES PLACARD ON THE UNIT.

OPERATING SPECIFICATIONS AND PERFORMANCE DATA

Refer to Final Stage Vehicle Manufacturer Label affixed to the Driver's Side Door Jam, Hinge Pillar or Latch Post of the cab chassis and the chassis manufacturer's manual.

MFG BY:_____

_____

DATE OF MFR:MO_____YR._____

GVWR:_____KG (_____LB)

GAWR-FRONT:

_____KG (_____LB)

WITH_____TIRES,

_____RIMS,@_____KPA

(_____PSI) COLD_____

GAWR-INTERMEDIATE(1):

_____KG (_____LB)

WITH_____TIRES,

_____RIMS,@_____KPA

(_____PSI) COLD_____

GAWR-INTERMEDIATE(2):

_____KG (_____LB)

WITH_____TIRES,

_____RIMS,@_____KPA

(_____PSI) COLD_____

GAWR-REAR:

_____KG (_____LB)

WITH_____TIRES,

_____RIMS,@_____KPA

(_____PSI) COLD_____

THIS VEHICLE HAS BEEN COMPLETED IN ACCORDANCE WITH THE PRIOR MANUFACTURERS' IVD, WHERE APPLICABLE. THIS VEHICLE CONFORMS TO ALL APPLICABLE FEDERAL MOTOR VEHICLE SAFETY STANDARDS, [AND BUMPER AND THEFT PREVENTION STANDARDS, IF APPLICABLE] IN EFFECT IN:

MO._____YR._____

VEHICLE IDENTIFICATION NUMBER:

_____

VEHICLE TYPE:

_____

7.2 CAPACITIES

Hydraulic System

Operating Pressure ..... 3500 psi max.

System Flow ..... 34 gpm

System Capacity ..... 65 gal

Reservoir Capacity ..... 55 gal

Type of Oil

0° to 104° F ..... Mobilfluid® 424

-40° to 0° F ..... Mobile DTE 10 Excel 32M

IM Body

Walking Surface .....400 lbs.

Rear Grab Handles .....250 lbs.

Rear Steps .....500 lbs.

THIS PAGE IS INTENTIONALLY LEFT BLANK

INDEX

0 - 9

6 Function Hand Controller.....3-4
10 Function Hand Controller 3-5
14 Function Hand Controller 3-6

A

Attachments/Accessories 2-1

B

Battery Hazards 1-9
Boom Winch Gear Case 6-12

C

Capacities 7-5
Chain Hook Adapters 4-11
Chemical Hazards 1-8
Cleanliness 2-1
Controls 3-2
Crush And Collision Hazards 1-4

D

Dampening System 2-13
Decals 2-2
Drum Winding .....
.....6-8

E

Electrical Hazards 1-3
Exhaust Fumes 1-8

F

Fall Hazards 1-7
Flammable Fuel 1-8
Fluid Levels 2-1
Frame Forks 4-8
Function Hand Controller ...3-4, 3-5, 3-6

G

General 1-1, 3-1
Greases 6-3
Gross Trailer Weight 4-19

H

Hazard Classification System c
JD60 IND 7-1
JD60 IND Lubrication
Points..... 6-10, 6-11, 6-12
HDTL 4-14
Heavy Duty Tire Lift (Optional) 4-14
Hydraulic Fluid 1-8
Hydraulic Oils 6-3
Hydraulic Pump 6-17, 6-18
Hydraulic Reservoir Magnetic
Plug 6-14
Hydraulic Reservoir Oil Level 6-12
Hydraulic Return Filter 6-13
Hydraulic System 7-5

I

In-cab Controller 3-8
Inspection Note: 2-10
Integral Spades 4-22
Introduction 6-1

K

Keep Wraps Tight 6-9

L

Left Hand - Control Decal
Locations 2-9
Left Hand - Side Control Station 3-2
Lowering/Retracting of
The Wrecker Boom 5-1

M

Maintenance And Lubrication 6-2
Minimum Approach Distance
(M.A.D.) 1-3

O

Oils And Greases 6-3
Operating Specifications And
Performance Data .....
.....7-1
Operation And Safety Manual(s) 2-1
Operational Check 2-1, 2-14
Operational Checks 2-14
Operator Training And Knowledge ... 1-2

P

P.T.O. Functioning Improperly 6-20
Personal Protective Equipment 1-10
Pintle Hook Ball Hitch 4-19
Pre-operation 1-2
Pre-operation Check And Inspection 2-1
Product Specifications 7-1
Proper Unreeling Procedures 6-7

R

Raising/Lowering/Retracting/Folding/ Tilting of The Underlift Boom 5-2
Raising/Retracting of The Outrigger Spades 5-3
Rear Hydraulic Outriggers/Spades .4-21
Remote Hand Controller 6-19
Right Hand - Control Decal Locations 2-8
Right Hand - Side Control Station ... 3-2

S

Safety Alert System And Safety Signal Words c
Safety Decals Placards 2-1
Shut Down For Travel 4-29
Spring Lift Brackets 4-5
Structure 2-1

T

Tip-over Hazards 1-7
Trailer 5th Wheel Plate And Pintle Hook Ball Hitch Adapter (Optional). 4-19
Trouble Shooting 6-16
Truck Chassis 7-4

U

Uncontrolled Towed Load Hazards .. 1-6
Underlift Attachments Supplied With The HDL 4-4
Underlift Operation 4-1
Unreeling & Uncoiling And Kinks 6-7

V

Various Positions For Lift Receiver Use 4-3
Vehicle Equipment Damage 1-10

W

Walk-around Inspection 2-10
Walk-around Inspection 2-1
Winch 6-3
Winch Cable / Falling Load Hazards 1-5
Winch Functioning Improperly 6-17
Wire Rope 6-4
Wire Rope Handling And Inspection .6-5
Wire Rope Installation 6-7
Wrecker Boom Operation 4-11

Serial Number _____

Date	Comments

Inspection, Maintenance and Repair Log

Date	Comments

JERR-DAN
An Oshkosh Corporation Company

TRANSFER OF OWNERSHIP

To Product Owner:

If you now own but ARE NOT the original purchaser of the product covered by this manual, we would like to know who you are. For the purpose of receiving safety-related bulletins, it is very important to keep Jerr-Dan Corporation updated with the current ownership of all Jerr-Dan products. Jerr-Dan maintains owner information for each Jerr-Dan product and uses this information in cases where owner notification is necessary.

Please use this form to provide Jerr-Dan with updated information with regard to the current ownership of Jerr-Dan products. Please return completed form to the Jerr-Dan Product Safety & Reliability Department via facsimile or mail to address as specified below.

Thank You,
Product Safety & Reliability Department
Jerr-Dan Corporation
13224 Fountainhead Plaza
Hagerstown, MD 21742
USA
Telephone: +1-717-485-6591
Fax: +1-301-745-3713

NOTE: Leased or rented units should not be included on this form.

Mfg. Model : _____

Serial Number : _____

Previous Owner : _____

Address : _____

_____

Country : _____ **Telephone : (_____)** _____

Date of Transfer : _____

Current Owner : _____

Address : _____

_____

Country : _____ **Telephone : (_____)** _____

Who in your organization should we notify?

Name : _____

Title : _____

THIS PAGE IS INTENTIONALLY LEFT BLANK

Hand Signals

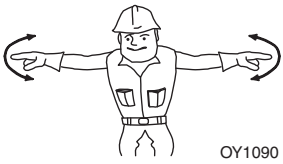

EMERGENCY STOP - With both arms extended laterally, hands open downward, move arms back and forth.

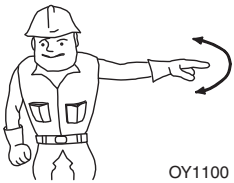

STOP - With either arm extended laterally, hand open downward, move arm back and forth.

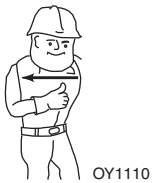

STOP ENGINE - Draw thumb or forefinger across throat.

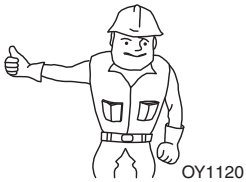

RAISE BOOM - With either arm extended horizontally, fingers closed, point thumb upward.

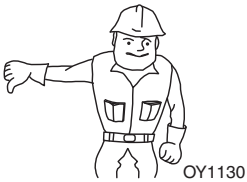

LOWER BOOM - With either arm extended horizontally, fingers closed, point thumb downward.

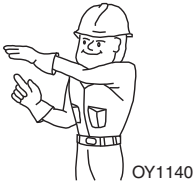

MOVE SLOWLY - Place one hand motionless in front of hand giving motion signal. (Raise load slowly shown)

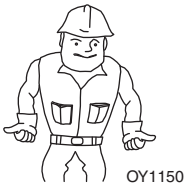

EXTEND BOOM - With both hands clenched, point thumbs outward.

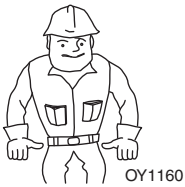

RETRACT BOOM - With both hands clenched, point thumbs inward.

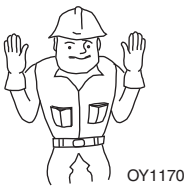

THIS FAR TO GO - With hands raised and open inward, move hands laterally, indicating distance to go.

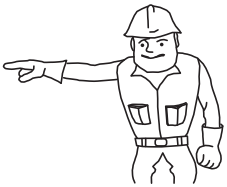

SWING BOOM - Arm extended, point with finger in direction of swing of boom.

Special Signals - When signals for auxiliary equipment functions or conditions not covered are required, they shall be agreed upon in advance by the operator and signalman.

5376000250

JERR-DAN

13224 Fountainhead Plaza
Hagerstown, MD 21742
Phone (717) 597-7111

TOW SUPPORT by JERR-DAN

Phone (800) 926-9666

OSHKOSH™

www.jerrdan.com