STANDARD DUTY CARRIER PARTS MANUAL

JERR-DAN®

An Oshkosh Corporation Company

13224 Fountainhead Plaza
Hagerstown, MD 21742
Phone (717) 597-7111
www.jerr-dan.com

5-376-000089
Rev 08 - March 1, 2014

© 2014 Jerr-Dan Corporation. All Rights Reserved

This manual covers the following Jerr-Dan Models:

NGAF	-	6 Ton Aluminum Pioneer Fixed Rail	NGAT	-	6 Ton Aluminum Pioneer Transporter
NGADF	-	6 Ton Aluminum Pioneer Dual Angle Fixed Rail	WSRB	-	6 Ton Steel Rustler
NGAR	-	6 Ton Aluminum Pioneer Removable Rail	RRSB	-	6 Ton Steel Removable Rail B.I.C.
NGAT	-	6 Ton Aluminum Pioneer Transporter	SLPB	-	6 Ton Steel Shark

Jerr-Dan Corporation strives to provIDe information that is accurate, complete and useful. Descriptions and illustrative material contained within this manual are as accurate as known at the time of publication and are subject to change, without notice, as a result of continuous product improvements. Jerr-Dan reserves the right to amend the information in this document at any time without prior notice.

Information contained in this manual reflects how this vehicle was built at the factory. Modifications or additions by the distributor or owner are not reflected in this manual.

This parts manual does not include service parts information for the commercial chassis (IHC, Ford, GMC, etc.).
That information is provIDed by the chassis manufacturer.

When ordering parts, please refer to your unit's Serial Number and Model Number. This information is be found on the aluminum tag riveted to the front left corner of the deck as shown below.

Additional or replacement manuals can be ordered by calling Jerr-Dan Parts at 717-597-7111.
Price and availability will be quoted at time of the request.

Please report comments and/or errors by contacting Jerr-Dan Corporation's Technical Publications Department by e-mail at technicalpublications@jerr-dan.com or by FAX on 717-485-7162.

Manufactured under one or more of the following patents: 5,133,633; 5,575,606; 5,697,741; 5,951,235; 6,231,294 B1; 6,315,515 B1; 6,336,783 B1; 6,447,239 B2; and 7,264,305 B2 with other Patents Pending.
Jerr-Dan and the Jerr-Dan logo are registered trademarks and Run Hard is a service mark of Jerr-Dan Corporation, Greencastle, PA USA.

The material in this document is confIDential and the property of Jerr-Dan Corporation. No part of this document may be photocopied,
Reproduced or translated to another language without the express written consent of Jerr-Dan Corporation.

TABLE OF CONTENTS

Deck - 6 Ton Aluminum Fixed Rail (NGAF) 8
Deck - 6 Ton Aluminum Dual Angle Fixed Rail (NGADF) 10
Deck - 6 Ton Aluminum Removable Rail (NGAR) 12
Deck - 6 Ton Aluminum Transporter (NGAT) 14
Deck - 6 Ton Steel Rustler (WSRB) 16
Deck - 6 Ton Steel Removable Rail (RRSB) 18
Deck - 6 Ton Steel Shark (SLPB) 20
Deck - 6 Ton Steel Transporter (STRB) 22
Steel Bolt-In Keyslots 24
Standard Bolt-On Headboard 26
Deluxe Bolt-On Headboard 28
Bucket Rest Headboard 30
Stationary Headboard 32
Worm Gear Winch 34
Planetary Gear Winch 36
Worm Gear Winch Cable Roller Guide / Tensioner Plate 38
Planetary Gear Winch Cable Roller Guide / Tensioner Plate 40
Planetary Gear Winch Cable Roller Guide / Tensioner Plate 42
Planetary Gear Winch Cable Roller Guide / Tensioner Plate 44
Planetary Gear Winch Cable Roller Guide / Tensioner Plate 46
Manual Remote Free Spool - Bolt-On Headboard 48
Dual Manual Remote Free Spool - Bolt-On Headboard 50
Manual Remote Free Spool - Stationary Headboard 52
Dual Manual Remote Free Spool - Stationary Headboard 54
Manual Remote Air Free Spool 56
Subframe (Outboard Tilt Cylinders) 60
Subframe (Inboard Tilt Cylinders) 64
Subframe (High Dump Tilt Cylinders) 68
Slide Pads 72
Mud Flaps 74
Mud Flaps - Ford F550 & Dodge Ram 5500 76
Final Assembly 78
Final Assembly 80
Ford F550 Frame Reinforcement and Spring Spacers 82
Ford F550 Subframe Modifications 84
GMC C4500/5500 Subframe Modifications 86
GMC C4500/5500 Brake Cable Rework & Rear Fuel Tank Mod 88
Dodge Ram 5500 Frame Reinforcement 90
Dodge Ram 5500 Frame Reinforcement 2013 & Newer 92
Dodge Ram 5500 Brake Cable Rework 94
Dodge Ram 5500 Fuel Tank Hose Install 96
Isuzu NRR Frame Reinforcement -176” WB 98
Isuzu NRR Frame Reinforcement -150” WB 100
Hydraulic Reservoir And Toolbox / Basket 104
Toolbox 110
Toolbox Shelf 112
Toolbox Light 114
Toolbox Top Storage Tray And Marker Lights 116
Toolbox Top Storage Tray And Marker Lights w/Underbox Mount 118
24” Tunnel Toolbox Installation 120
Dual Controls - 3 Bank 124
Dual Controls - 4 Bank 126
Dual Controls - 5 Bank 128
Dual Controls - 6 Bank 130
Dual Controls - 7 Bank 132
Hydraulic Components - Standard 134
Hydraulic Components - Standard 136
Hydraulic Components - Hose Routing (Std IHC) 138
Hydraulic Components - Hose Routing (Std Cab IHC 144CA) 140
Hydraulic Components - Hose Routing (EXT Cab IHC 150CA) 142
Hydraulic Components - Hose Routing (Ford STD Cab) 144
Hydraulic Components - Hose Routing (Ford Ext Cab 150CA) 146
Hydraulic Components - Hose Routing (Hino) 148
Hydraulic Components - Hose Routing (Freightliner) 150
Hydraulic Components - Hose Routing (Peterbilt) 152
Hydraulic Components - Hose Routing (Chevy/GMC) 154
Hydraulic Components - Hose Routing (Dodge) 156
Hydraulic Components - Hose Routing (Std UD) 158
Hydraulic Components - IRL Wheel lift With Manual Grids 160
Hydraulic Components - IRL Wheel lift With Hydraulic Grids 162
Hydraulic Components - ZOD Wheel lift With Manual Grids 164
Hydraulic Components - ZOD Wheel lift With Hydraulic Grids 166
Hydraulic Components - Stabilizer w/ Reese Rec Or Pintle Hitch 168
Hydraulic Components - Stabilizer w/ Hyd Pintle Hitch Mtg Plate 170
Hydraulic Components - IRL Tow Option 172
Hydraulic Components - Hydraulic Extend Tow Option 174
Electrical Components - Standard w/ Bolt-On Headboard 176
Electrical Components - Standard w/ Stationary Headboard 178

TABLE OF CONTENTS

Deck Marker Lights....180
R.A.I.L. Marker Lights....182
Headboard Side Marker Lights....184
Electrical Components - Optional (Tail Light Converter)....186
IRL Wheel Lift - Manual Grids....188
IRL Wheel Lift - Hydraulic Grids....190
ZOD Wheel Lift - Manual Grids....192
ZOD Wheel Lift - Hydraulic Grids....194
Manual L-Arm Wheel Lift Grid w/ Ball Plate....196
Manual L-Arm Wheel Lift Grid w/ Reese Reciever....198
Manual L-Arm Wheel Lift Grid w/ Pintle Plate....200
Manual T37 Pivoting Wheel Lift Grid w/ Ball Plate....202
Manual T37 Pivoting Wheel Lift Grid w/ Reese Reciever....204
Hydraulic Wheel Lift Grid....206
Hydraulic Rear Dock Stabilizer....212
Hydraulic Rear Dock Stabilizer w/ Reese Hitch Receiver....214
Hydraulic Rear Dock Stabilizer w/ Hyd Ext Pintle Hitch Mtg Plate....216
Hydraulic Rear Dock Stabilizer w/ Man Ext Pintle Hitch Mtg Plate....218
Ball Hitch Mounting Plate - IRL....220
Ball Hitch Mounting Plate - Hydraulic Extend....222
Ball Hitch Mounting Plate - Manual Extend....224
Pintle Hitch Mounting Plate - IRL....226
Pintle Hitch Mounting Plate - Hydraulic Extend....228
Pintle Hitch Mounting Plate - Manual Extend....230
Towbar - IRL....232
Towbar - Hydraulic Extend....234
AutoGrid Cylinder Assembly - P/N 7320000064....236
IRL Cylinder Assembly - P/N 3320000114....238
Wheel Lift Extend Cylinder Assembly - P/N 3320000115....240
Tow Option Extend Cylinder Assembly - P/N 3320000116....242
Tow Option Extend Cylinder Assembly - P/N 3320000117....244
ZOD Cylinder Assembly - P/N 3320000118....246
Tilt Cylinder Assembly (Inboard) - P/N 3320000120....248
Tilt Cylinder Assembly - P/N 3320000122....250
IRL Cylinder Assembly - P/N 3320000134....252
ZOD Cylinder Assembly - P/N 3320000135....254
ZOD Cylinder Assembly - P/N 7330000157....256
Roll Cylinder Assembly - P/N 3320000236....258
Lightbars....260
Switch Panels....262
Work Lights....264
Bolt-On D-Rings....266
Approach Tip Roller....268
1, 2, 3, 4 or 5 Remote Control Operations....270
6 or 7 Remote Control Operations....272
Remote Throttle Control....274
Glad Hands And 7-Way Connector....276
Air Supply Disconnect....278
Jump Start Kit....280
Folding Deck Ladder....282
Chains And Straps....284
Towing Safety Tools....286
Decals....288
Winch - 8K Planetary Gear w/Manual Freespool - 7970000056....290
Winch - 8K Worm Gear w/ Manual Freespool - 7970000121....292
Winch -10K Worm Gear w/ Manual Freespool - 7970000123....294
Winch -10K Worm Gear w/ Air Freespool - 7970000140....296
Winch - 8K Worm Gear w/ Air Freespool - 7970000142....298
Winch -10K Planetary Gear w/ Manual Freespool - 7970000158....300
Winch -10K Planetary Gear w/ Air Freespool - 7970000166....302
Lightbar 58” Code3 - 1001136989 & 1001136993....304
Lightbar 60” Whelen - 7590000403....306
TG Series PTO Installation - Electric/Air Shift....310
TG Series PTO Installation - Air Shift....312
TG Series PTO Installation - E-Hydra Shift....314
TG Series PTO Installation - Lectra Shift....316
CS6/CS8 Series PTO Installation - Electric/Air Shift....318
CS6/CS8 Series PTO Installation - Electric/Hydraulic Shift....320
CS24 Series PTO Installation....322
Valve Assembly - 3935000111....324
Valve Assembly - 3935000115....326
Valve Assembly - 3935000116....328
Valve Assembly - 3935000117....330
Valve Assembly - 3935000118....332
Valve Assembly - 3935000150....334
Valve Assembly - 3935000166....336
Valve Assembly - 1001145986....338
Valve Assembly - 1001146603....340

TABLE OF CONTENTS

Accessory Equipment.....342
Hydraulic Schematic.....344
Electrical Schematic.....353
Part Number Index.....354

DECK - 6 TON ALUMINUM FIXED RAIL (NGAF)

ITEM	PART NO.	DESCRIPTION	QTY
1	3097000655	19’ Deck - 96” Wide	1
	3097000656	19’ Deck -102” Wide	
	3097000665	20’ Deck - 96” Wide	
	3097000666	20’ Deck -102” Wide	
	1001128462	21’ Deck - 90” Wide	
	3097000675	21’ Deck - 96” Wide	
	3097000676	21’ Deck -102” Wide	
2	7679000017	Chain Tray Mat	2

DECK - 6 TON ALUMINUM FIXED RAIL (NGAF)

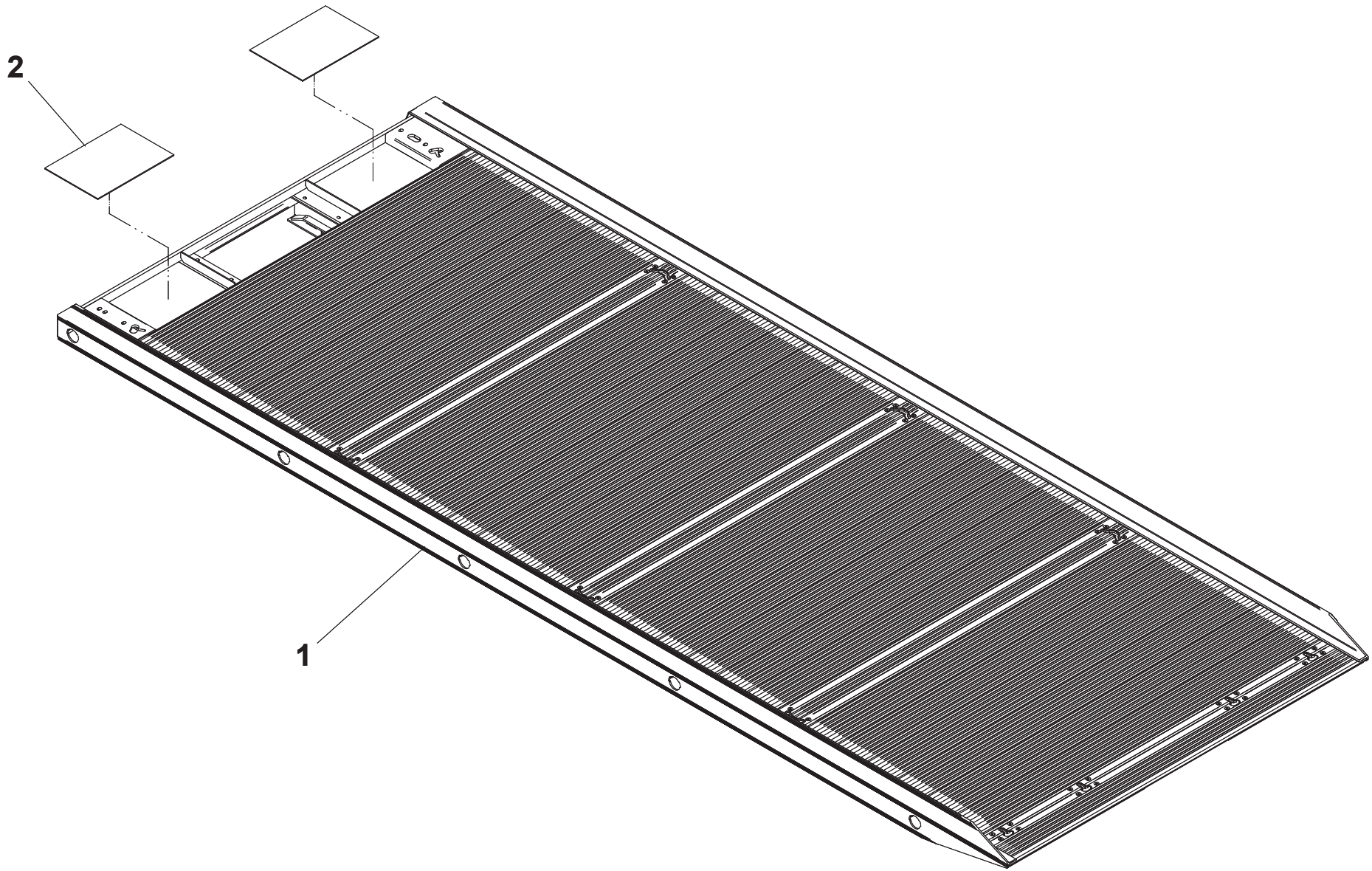

DECK - 6 TON ALUMINUM DUAL ANGLE FIXED RAIL (NGADF)

ITEM	PART NO.	DESCRIPTION	QTY
1	3097000682	21’ Deck -102” Wide	1
	3097000681	21’ Deck - 96”	
	3097000672	20’ Deck -102” Wide	
	3097000671	20’ Deck - 96”	
	3097000662	19’ Deck -102” Wide	
	3097000661	19’ Deck - 96”	
2	7679000017	Chain Tray Mat	2

DECK - 6 TON ALUMINUM DUAL ANGLE FIXED RAIL (NGADF)

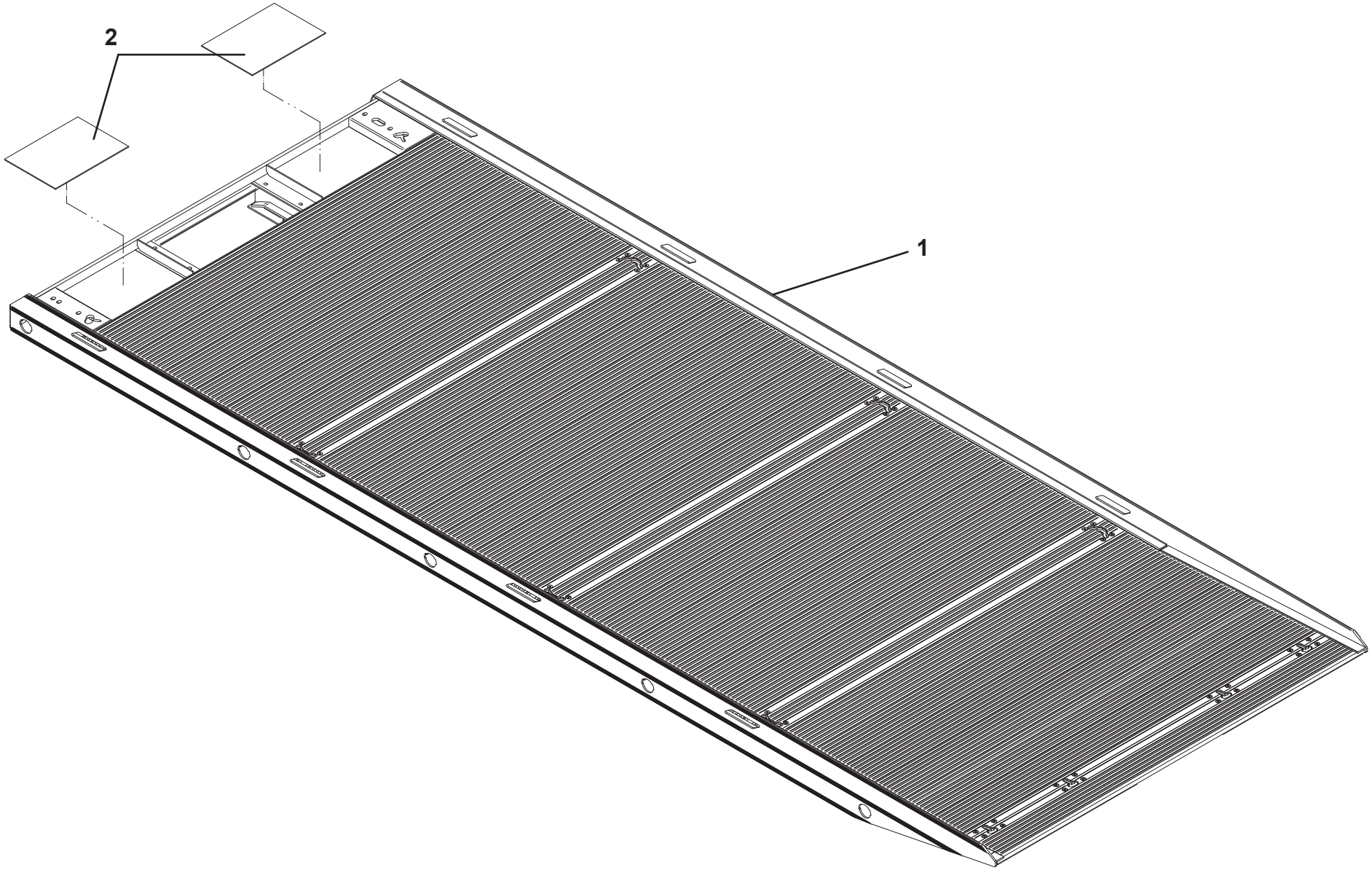

DECK - 6 TON ALUMINUM REMOVABLE RAIL (NGAR)

ITEM	PART NO.	DESCRIPTION	QTY
1	3097000653	19’ Deck - 96” Wide	1
	3097000654	19’ Deck -102” Wide	
	3097000663	20’ Deck - 96” Wide	
	3097000664	20’ Deck -102” Wide	
	3097000673	21’ Deck - 96” Wide	
	3097000674	21’ Deck -102” Wide	
2	7679000017	Chain Tray Mat	2

ITEM	PART NO.	DESCRIPTION	QTY
		Standard Aluminum Removable Rails	
3	3017000121	Angle Assembly LH Front	1
4	3017000122	Angle Assembly RH Front	1
5	3017000127	Angle Assembly LH Rear (19’ & 20’ decks)	1
	3097000129	Angle Assembly LH Rear (21’ deck)	
6	3017000128	Angle Assembly RH Rear (19 & 20’ decks)	1
	3017000130	Angle Assembly RH Rear (21’ deck)	
7	7661000055	U-Nut	12
8	7120000005	Capscrew, 0.50”-13NC x 2.50”	10
		Parts Breakdown of Angle Assemblies	
9	4017001699	Angle LH Front	1
10	4017001700	Angle RH Front	
11	4017001705	Angle LH Rear (19’ & 20’ decks)	1
	4017001707	Angle LH Rear (21’ deck)	
12	4017001706	Angle RH Rear (19’ & 20’ decks)	
	4017001708	Angle RH Rear (21’ deck)	
13	1001137970	Carriage Bolt, 0.50”-13NC x 4.50”	20
14	8411080102	Extrusion	10
15	4706006228	Plate	10
16	7660182601	Locknut, 0.50”-13NC	20

DECK - 6 TON ALUMINUM REMOVABLE RAIL (NGAR)

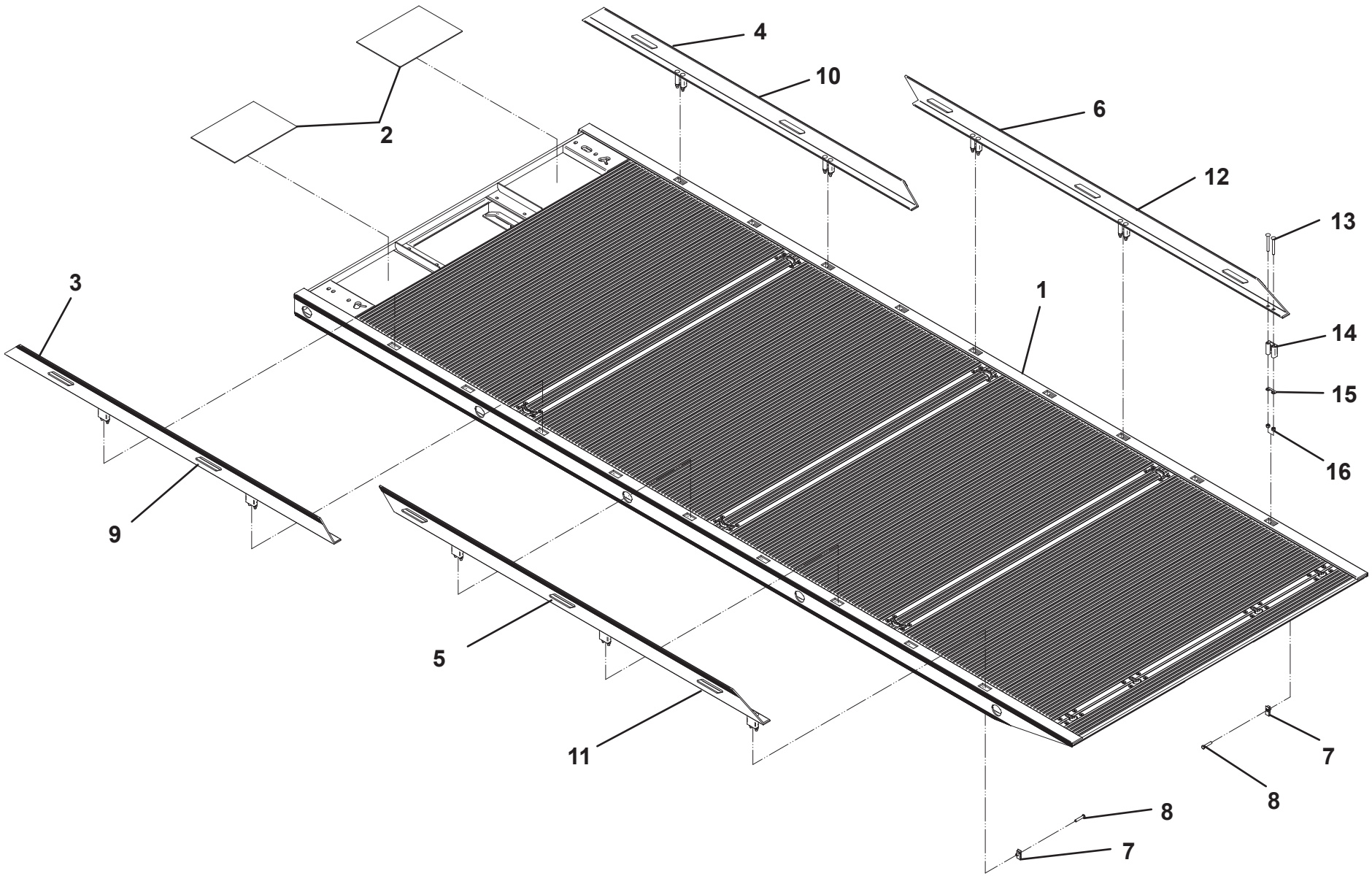

DECK - 6 TON ALUMINUM TRANSPORTER (NGAT)

ITEM	PART NO.	DESCRIPTION	QTY
1	Consult Factory	19’ Deck - 95” Wide, 12” X-mem spacing	1
	Consult Factory	19’ Deck - 95” Wide, 8” X-mem spacing	
	Consult Factory	19’ Deck -102” Wide, 12” X-mem spacing	
	Consult Factory	19’ Deck -102” Wide, 8” X-mem spacing	
	Consult Factory	20’ Deck - 95” Wide, 12” X-mem spacing	
	Consult Factory	20’ Deck - 95” Wide, 8” X-mem spacing	
	Consult Factory	20’ Deck -102” Wide, 12” X-mem spacing	
	Consult Factory	20’ Deck -102” Wide, 8” X-mem spacing	
	Consult Factory	21’ Deck - 95” Wide, 12” X-mem spacing	
	Consult Factory	21’ Deck - 95” Wide, 8” X-mem spacing	
	Consult Factory	21’ Deck -102” Wide, 12” X-mem spacing	
	Consult Factory	21’ Deck -102” Wide, 8” X-mem spacing	
2	7679000017	Chain Tray Mat	2
3	Consult Factory	Keruing Board	A/R
4	7786000007	Screw, 0.31”-18NC x 2.00”	A/R

ITEM	PART NO.	DESCRIPTION	QTY
		Standard Aluminum Removable Rails	
5	3017000121	Angle Assembly LH Front	1
6	3017000122	Angle Assembly RH Front	1
7	3017000127	Angle Assembly LH Rear (19’ & 20’ decks)	1
	3017000129	Angle Assembly LH Rear (21’ deck)	
8	3017000128	Angle Assembly RH Rear (19 & 20’ decks)	1
	3017000130	Angle Assembly RH Rear (21’ deck)	
9	7661000055	U-Nut	12
10	7120000005	Capscrew, 0.50”-13NC x 2.50”	10
		Parts Breakdown of Angle Assemblies	
11	4017001699	Angle LH Front	1
12	4017001700	Angle RH Front	
13	4017001705	Angle LH Rear (19’ & 20’ decks)	1
	4017001707	Angle LH Rear (21’ deck)	
14	4017001706	Angle RH Rear (19’ & 20’ decks)	
	4017001708	Angle RH Rear (21’ deck)	
15	1001137970	Carriage Bolt, 0.50”-13NC x 4.50”	20
16	8411080102	Extrusion	10
17	4706006228	Plate	10
18	7660182601	Locknut, 0.50”-13NC	20

DECK - 6 TON ALUMINUM TRANSPORTER (NGAT)

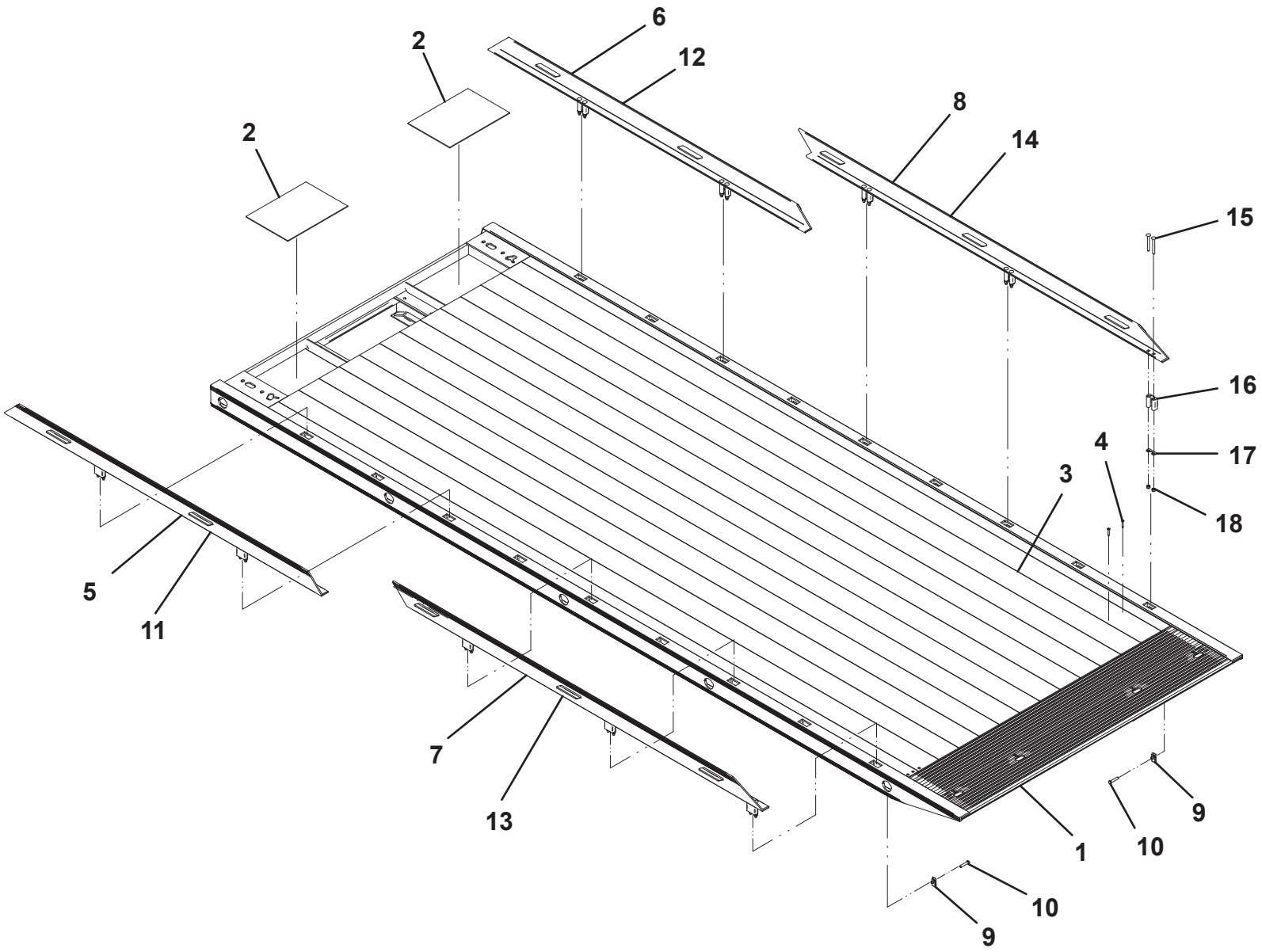

DECK - 6 TON STEEL RUSTLER (WSRB)

ITEM	PART NO.	DESCRIPTION	QTY
1	Consult Factory	19’ Deck - 96” Wide	1
	Consult Factory	19’ Deck -102” Wide	
	Consult Factory	20’ Deck - 96” Wide	
	Consult Factory	20’ Deck -102” Wide	
	Consult Factory	21’ Deck - 96” Wide	
	Consult Factory	21’ Deck -102” Wide	

DECK - 6 TON STEEL RUSTLER (WSRB)

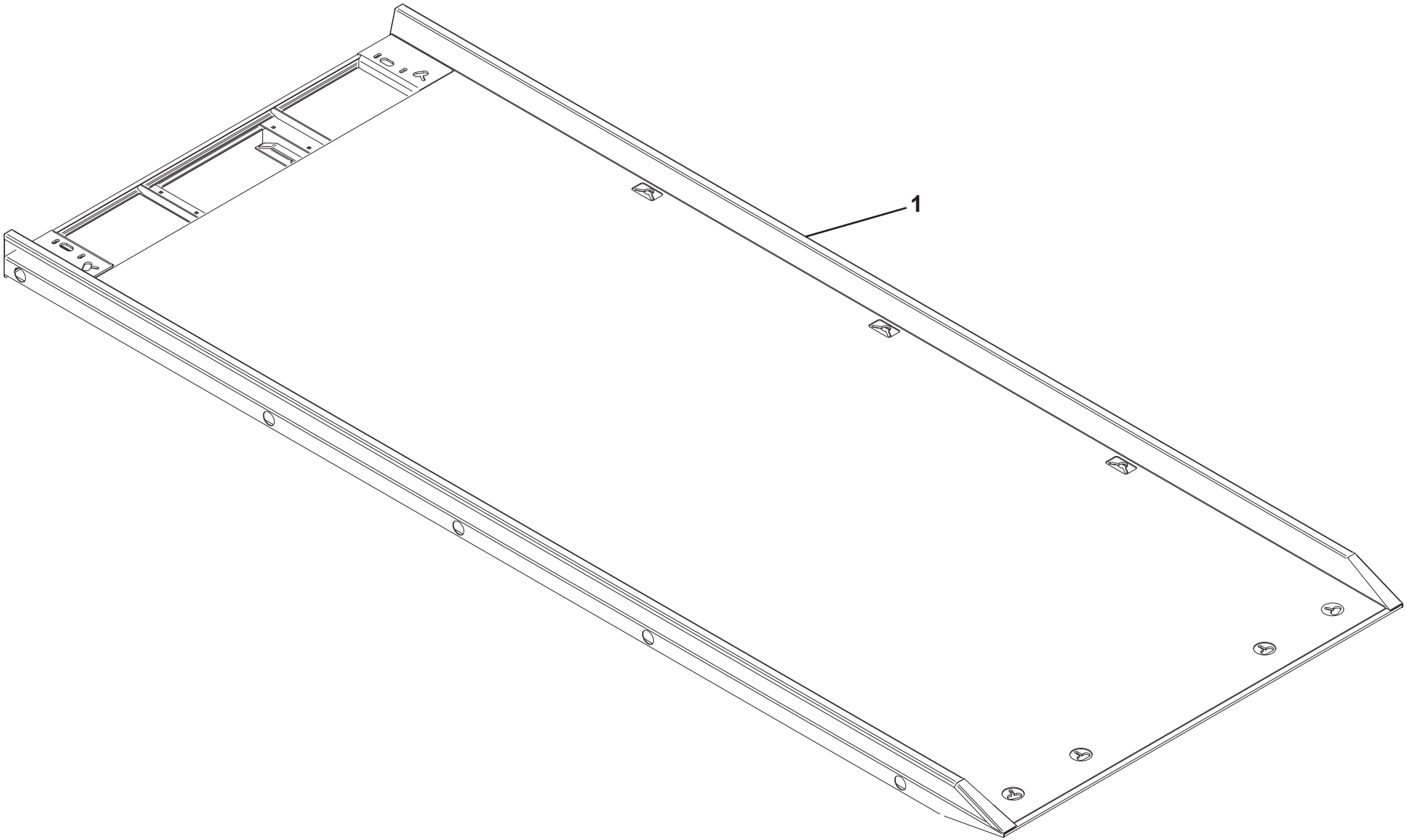

DECK - 6 TON STEEL REMOVABLE RAIL (RRSB)

ITEM	PART NO.	DESCRIPTION	QTY
1	Consult Factory	19’ Deck - 96” Wide	1
	Consult Factory	19’ Deck -102” Wide	
	Consult Factory	19’ High Dump Deck - 96” Wide	
	Consult Factory	20’ Deck - 96” Wide	
	Consult Factory	20’ Deck -102” Wide	
	Consult Factory	21’ Deck - 90” Wide	
	Consult Factory	21’ Deck - 96” Wide	
	Consult Factory	21’ Deck -102” Wide	

ITEM	PART NO.	DESCRIPTION	QTY
		Standard Steel Tubular Removable Rails:	
2	3729000259	Rail Weldment Front (19’ & 20’ decks)	2
	3729000260	Rail Weldment Front (21’ deck)	
3	3729000262	Rail Weldment Rear (19’ & 20’ decks)	2
	3729000261	Rail Weldment Rear (21’ deck)	
4	7115181050	Capscrew, 0.50”-13NC x 1.25”	10
5	7701000033	End Cap	4
		Optional Aluminum Removable Rails:	
6	3017000121	Angle Assembly LH Front	1
7	3017000122	Angle Assembly RH Front	1
8	3017000127	Angle Assembly LH Rear (19’ & 20’ decks)	1
	3017000129	Angle Assembly LH Rear (21’ deck)	
9	3017000128	Angle Assembly RH Rear (19’ & 20’ decks)	1
	3017000130	Angle Assembly RH Rear (21’ deck)	
10	7661000055	U-Nut	10
11	7120000005	Capscrew, 0.50”-13NC x 2.50”	10
		Parts Breakdown of Angle Assemblies	
12	4017001699	Angle LH Front	1
13	4017001700	Angle RH Front	
14	4017001705	Angle LH Rear (19’ & 20’ decks)	1
	4017001707	Angle LH Rear (21’ deck)	
15	4017001706	Angle RH Rear (19’ & 20’ decks)	
	4017001708	Angle RH Rear (21’ deck)	
16	1001137970	Carriage Bolt, 0.50”-13NC x 4.50”	20
17	8411080102	Extrusion	10
18	4706006228	Plate	10
19	7660182601	Locknut, 0.50”-13NC	20

DECK - 6 TON STEEL REMOVABLE RAIL (RRSB)

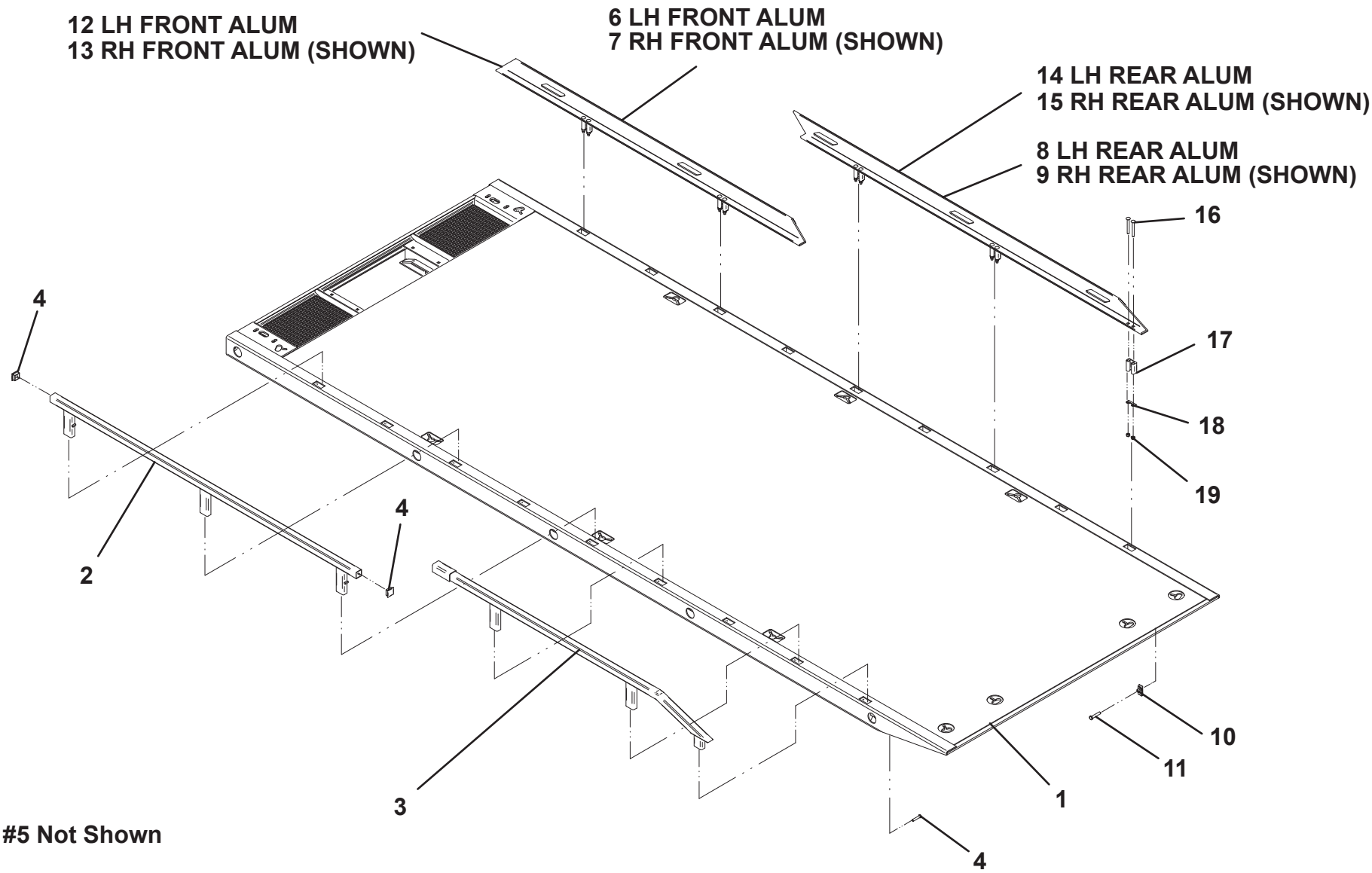

#5 Not Shown

DECK - 6 TON STEEL SHARK (SLPB)

ITEM	PART NO.	DESCRIPTION	QTY
1	Consult Factory	19’ Deck, 6 Ton, 102” Wide	1
	Consult Factory	20’ Deck, 6 Ton, 102” Wide	
	Consult Factory	21’ Deck, 6 Ton, 102” Wide	
2	3017000135	Angle Assembly LH (19’ deck)	1
	3017000137	Angle Assembly LH (20’ deck)	
	3017000139	Angle Assembly LH (21’ deck)	
3	3017000136	Angle Assembly RH (19’ deck)	1
	3017000138	Angle Assembly RH (20’ deck)	
	3017000140	Angle Assembly RH (21’ deck)	
4	7661000055	U-Nut (19’ & 20’ decks)	8
	7661000055	U-Nut (21’ deck)	10
5	7120000005	Capscrew, 0.50”-13NC x 2.50”	8
		(19’ & 20’ decks)	
	7120000005	Capscrew, 0.50”-13NC x 2.50” (21’ deck)	10
6	4178000874	Bracket, LH	1
7	4178000873	Bracket, RH	1
8	7115181223	Screw, 0.50”-13NC x 1.50”	4
9	7950180161	Flatwasher, 0.50” ID	4
10	7660182601	Locknut, 0.50”-13NC	4

ITEM	PART NO.	DESCRIPTION	QTY
		Parts Breakdown of Angle Assemblies	
11	4017001713	Angle LH (19’ deck)	1
	4017001715	Angle LH (20’ deck)	
	4017001717	Angle LH (21’ deck)	
12	4017001714	Angle RH (19’ deck)	1
	4017001716	Angle RH (20’ deck)	
	4017001718	Angle RH (21’ deck)	
13	1001137970	Carriage Bolt, 0.50”-13NC x 4.50”	16
		(19’ & 20’ decks)	
	1001137970	Carriage Bolt, 0.50”-13NC x 4.50”	20
		(21’ deck)	
14	8411080102	Extrusion (19’ & 20’ decks)	8
		Extrusion (21’ deck)	10
15	4706006228	Plate (19’ & 20’ decks)	8
		Plate (21’ deck)	10
	7660182601	Locknut, 0.50”-13NC (19’ & 20’ decks)	16
		Locknut, 0.50”-13NC (21’ deck)	20

DECK - 6 TON STEEL SHARK (SLPB)

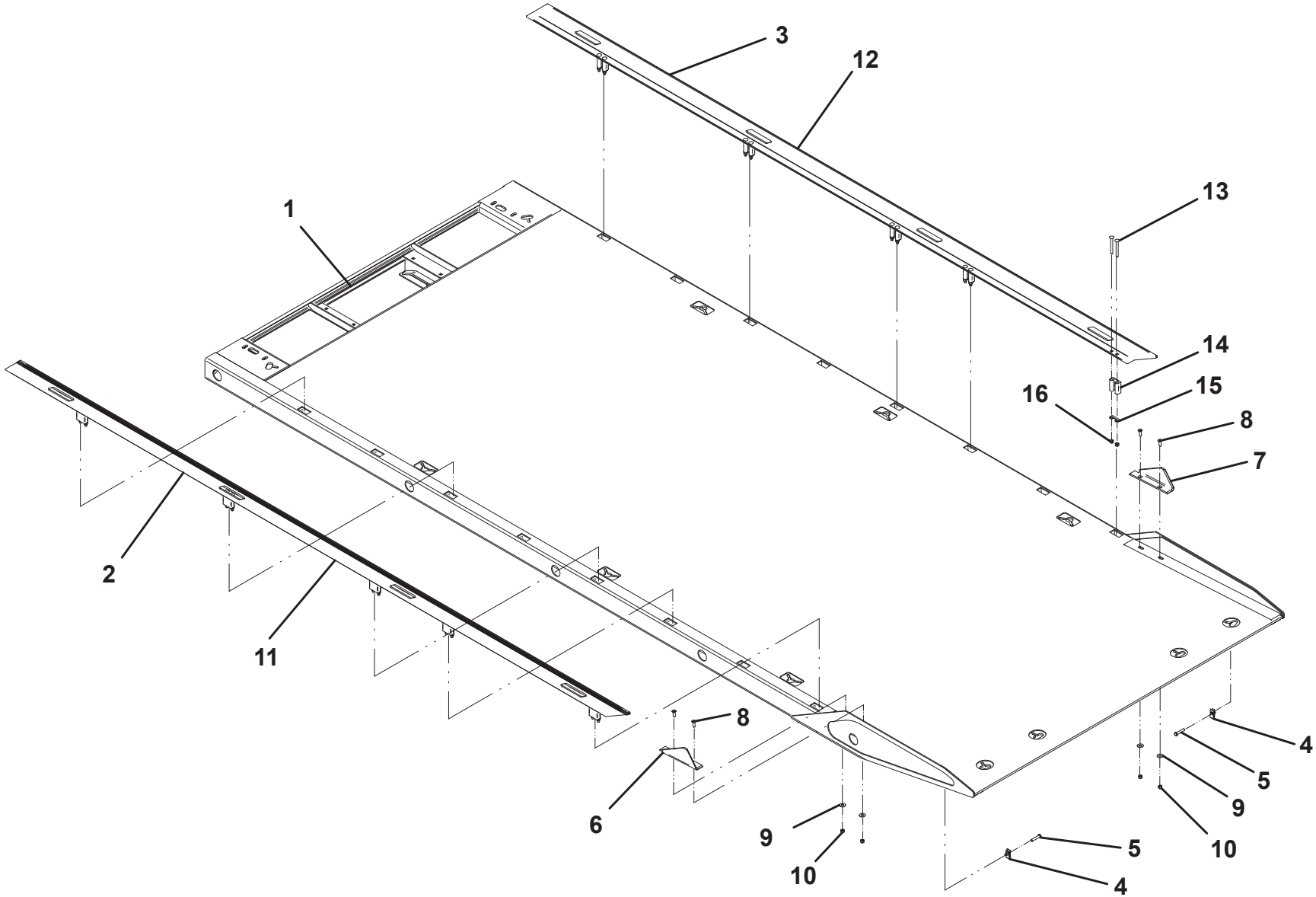

DECK - 6 TON STEEL TRANSPORTER (STRB)

ITEM	PART NO.	DESCRIPTION	QTY
1	Consult Factory	19’ Deck, 95” Wide, 8” X-mem spacing	1
	Consult Factory	19’ Deck, 102” Wide, 8” X-mem spacing	
	Consult Factory	20’ Deck, 95” Wide, 8” X-mem spacing	
	Consult Factory	20’ Deck -102” Wide, 8” X-mem spacing	
	Consult Factory	21’ Deck - 95” Wide, 8” X-mem spacing	
	Consult Factory	21’ Deck -102” Wide, 8” X-mem spacing	
2	Consult Factory	Keruing Board	A/R
3	7786000007	Screw, 0.31”-18NC x 2.00”	A/R

ITEM	PART NO.	DESCRIPTION	QTY
		Standard Steel Tubular Removable Rails:	
4	3729000259	Rail Weldment Front (19’ & 20’ decks)	2
	3729000260	Rail Weldment Front (21’ deck)	
5	3729000262	Rail Weldment Rear (19’ & 20’ decks)	2
	3729000261	Rail Weldment Rear (21’ deck)	
6	7115181050	Capscrew, 0.50”-13NC x 1.25”	10
7	7701000033	End Cap	4
		Optional Aluminum Removable Rails:	
8	3017000121	Angle Assembly LH Front	1
9	3017000122	Angle Assembly RH Front	1
10	3017000127	Angle Assembly LH Rear (19’ & 20’ decks)	1
	3017000129	Angle Assembly LH Rear (21’ deck)	
11	3017000128	Angle Assembly RH Rear (19’ & 20’ decks)	1
	3017000130	Angle Assembly RH Rear (21’ deck)	
12	7661000055	U-Nut	10
13	7120000005	Capscrew, 0.50”-13NC x 2.50”	10
		Parts Breakdown of Angle Assemblies	
14	4017001699	Angle LH Front	1
15	4017001700	Angle RH Front	
16	4017001705	Angle LH Rear (19’ & 20’ decks)	1
	4017001707	Angle LH Rear (21’ deck)	
17	4017001706	Angle RH Rear (19’ & 20’ decks)	
	4017001708	Angle RH Rear (21’ deck)	
18	1001137970	Carriage Bolt, 0.50”-13NC x 4.50”	20
19	8411080102	Extrusion	10
20	4706006228	Plate	10
21	7660182601	Locknut, 0.50”-13NC	20

DECK - 6 TON STEEL TRANSPORTER (STRB)

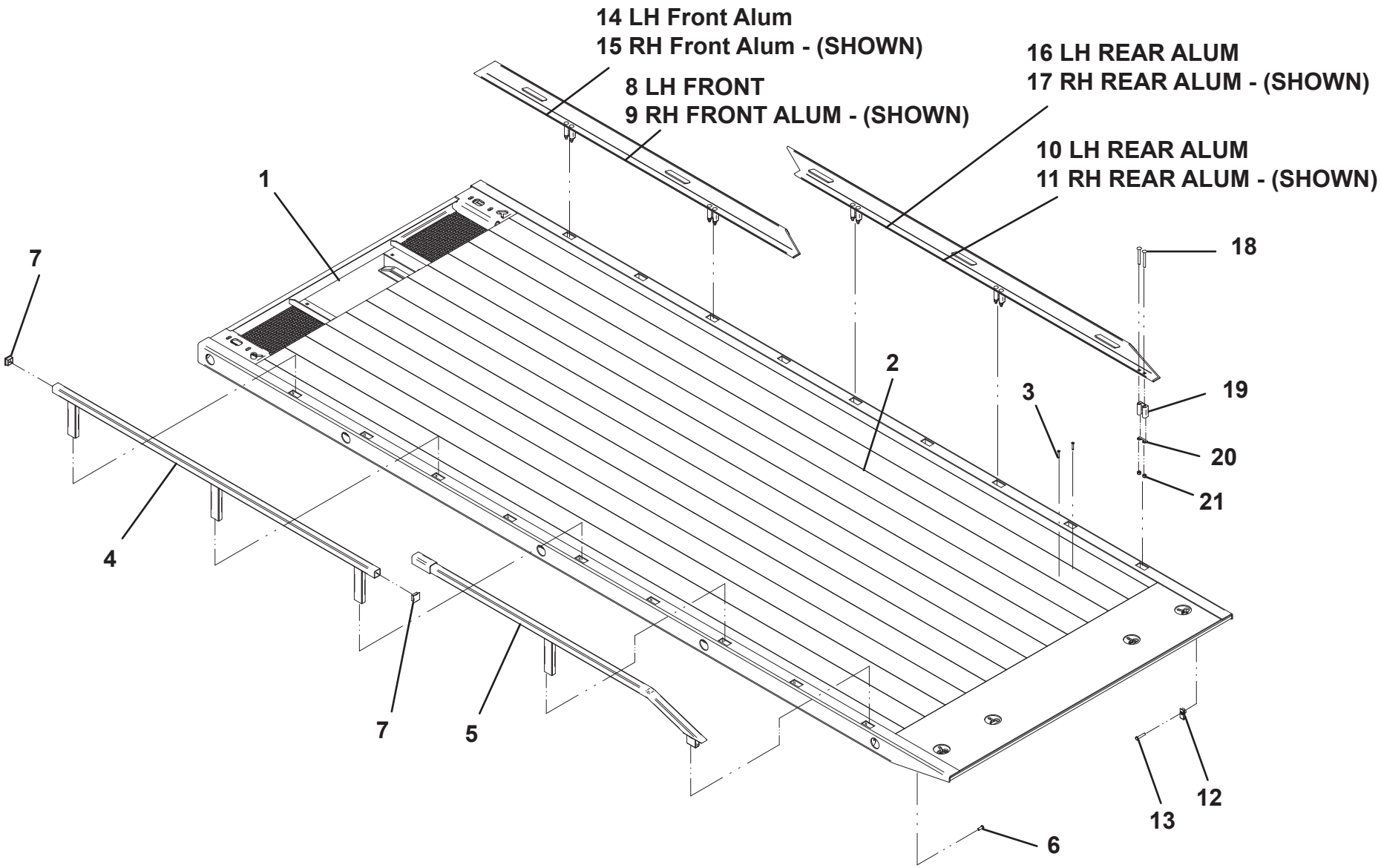

STEEL BOLT-IN KEYSLOTS

ITEM	PART NO.	DESCRIPTION	QTY
		Aluminum Decks	
1	4706005551	Keyslot Plate	1
2	1001138460	Screw, 0.50”-13NC x 1.50” Flat Head	4*
3	7660182601	Locknut, 0.50”-13NC	4*
4	7950180153	Flatwasher, 0.50” ID	4*
		Steel Panel Decks	
1	4706005551	Keyslot Plate	1
2	1001138460	Capscrew, 0.50”-13NC x 1.50”	4*
3	7950180153	Flatwasher, 0.50” ID	4*
4	7660182601	Locknut, 0.50”-13NC	4*

*Quantities are per item #1

STEEL BOLT-IN KEYSLOTS

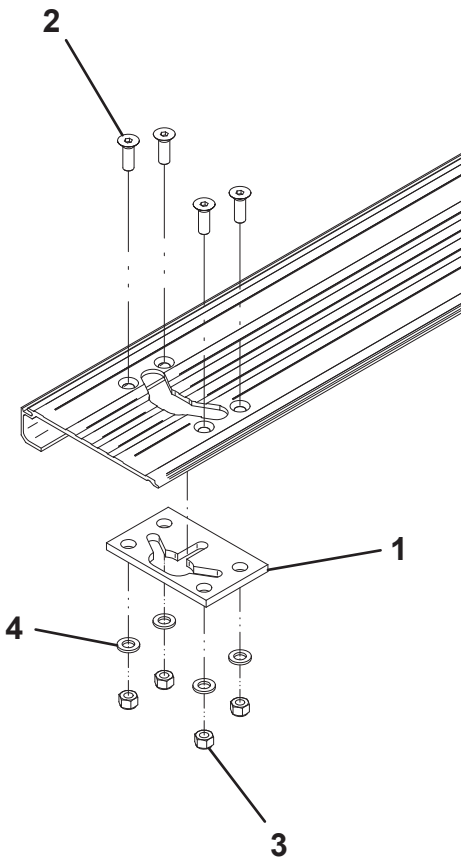

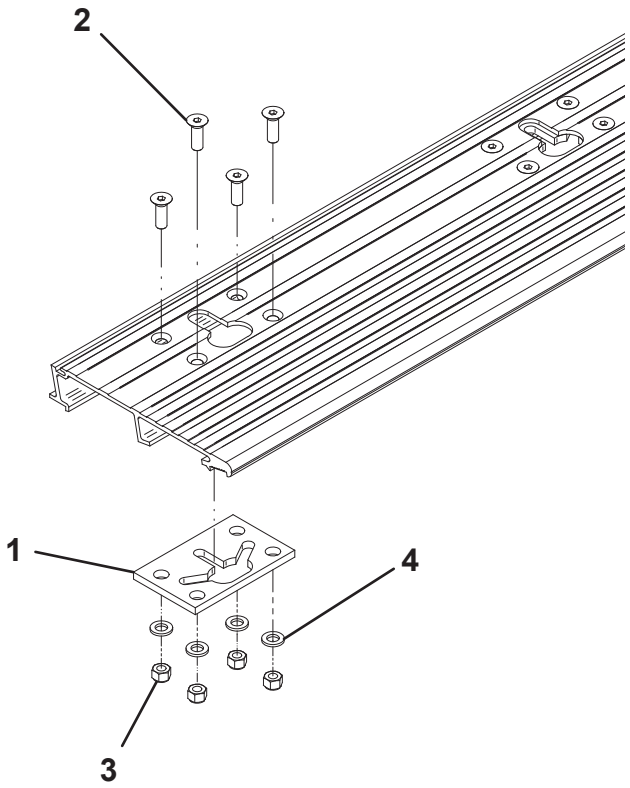

ALUMINUM DECKS

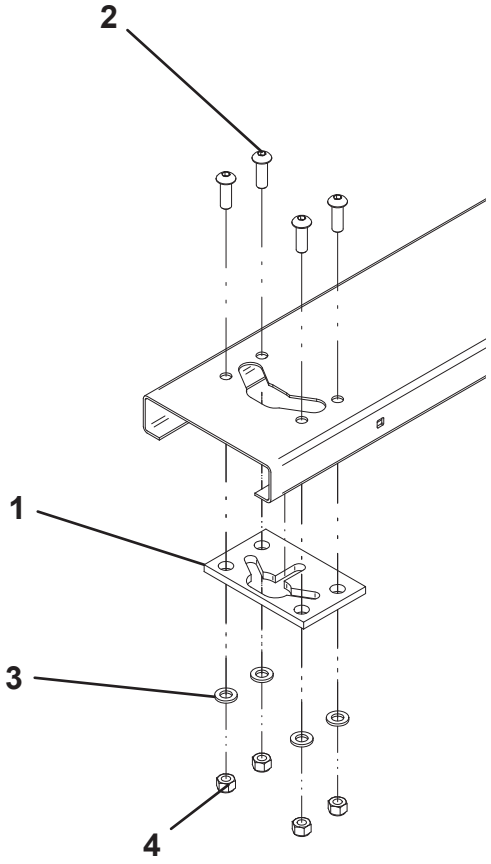

STEEL PANEL DECKS

STANDARD BOLT-ON HEADBOARD

ITEM	PART NO.	DESCRIPTION	QTY
1	1001129362	Standard Headboard Weld - 36.50”	1
	1001129364	Standard Headboard Weld - 45.50”	
	1001129378	Standard Headboard Weld - 50.50”	
	1001129379	Standard Headboard Weld - 57.50”	
2	4796000037	Gasket	2
3	7105201650	Capscrew, 0.63”-18NF x 2.00”	4
4	7950200152	Flatwasher, 0.63” ID	4
5	7660200035	Nut, 0.63”-18NF	2
6	4686000295	Panel (36.50” or 45.50” headboard	1
		w/ std. remote free spool)	
	4686000296*	Panel (50.50” or 57.50” headboard	
		w/ std. remote free spool	
	4686000301*	Panel (45.50” headboard	
		w/ air remote free spool)	
	4686000302*	Panel (50.50” or 57.50” headboard	
		w/ air remote free spool	
7	4892000008	Tape (36.50” or 45.50” headboard)	4
	4892000009	Tape (50.50” or 57.50” headboard)	
8	7759000022	Pop Rivet	8

*included with Standard Headboard Weld

STANDARD BOLT-ON HEADBOARD

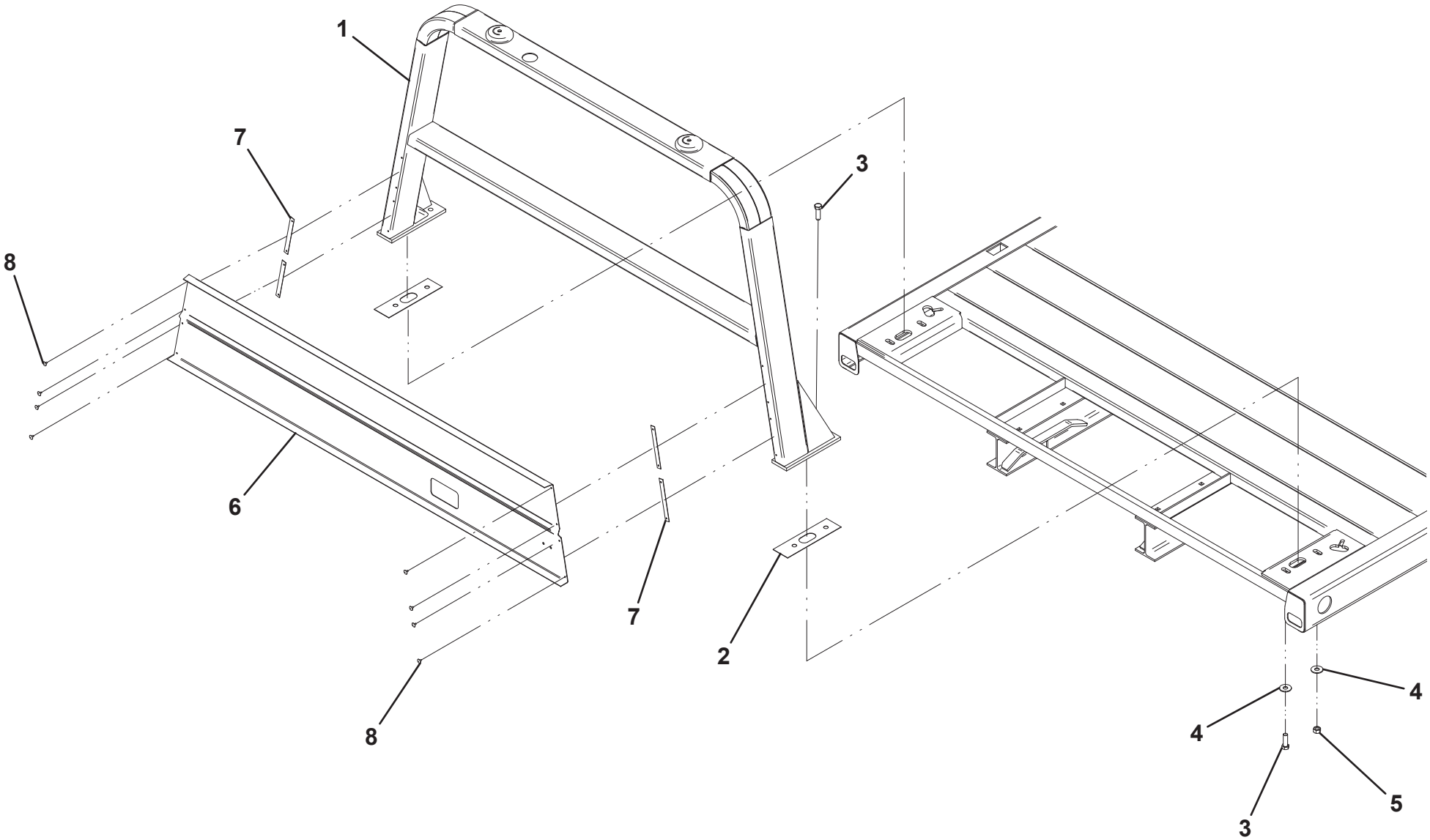

DELUXE BOLT-ON HEADBOARD

ITEM	PART NO.	DESCRIPTION	QTY
1	1001129151	Deluxe Headboard Weld - 36.50”	1
		(w/ std. remote free spool)	
	1001129153	Deluxe headboard Weld - 45.50”	
		(w/ std. remote free spool)	
	1001129159	Deluxe Headboard Weld - 45.50”	
		(w/ air remote free spool)	
	1001129155	Deluxe Headboard Weld - 50.50”	
		(w/ std. remote free spool)	
	1001129161	Deluxe Headboard Weld - 50.50”	
		(w/ air remote free spool)	
	1001129157	Deluxe Headboard Weld - 57.50”	
		(w/ std. remote free spool)	
	1001129163	Deluxe Headboard Weld - 57.50”	
		(w/ air remote free spool)	
2	4796000037	Gasket	2
3	7105201650	Capscrew, 0.63”-18NF x 2.00”	4
4	7950200152	Flatwasher, 0.63” ID	4
5	7660200035	Nut, 0.63”-18NF	2
6	4686000295*	Panel (36.50” or 45.50” headboard	1
		w/ std. remote free spool)	
	4686000296*	Panel (50.50” or 57.50” headboard	
		w/ std. remote free spool)	
	4686000301*	Panel (45.50” headboard	
		w/ air remote free spool)	
	4686000302*	Panel (50.50” or 57.50” headboard	
		w/ air remote free spool)	
7	4892000008*	Tape (36.50” or 45.50” headboard)	4
	4892000009*	Tape (50.50” or 57.50” headboard)	
8	7759000022	Pop Rivet	8

ITEM	PART NO.	DESCRIPTION	QTY
9	3391000020	Screen Weld (36.50” headboard)	1
	3391000021	Screen Weld (45.50” headboard)	
	3391000017	Screen Weld (50.50” headboard)	
	3391000022	Screen Weld (57.50” headboard)	
10	4796000003	Gasket	1
11	7759000015	Rivet	6

*included with Deluxe Headboard Weld

DELUXE BOLT-ON HEADBOARD

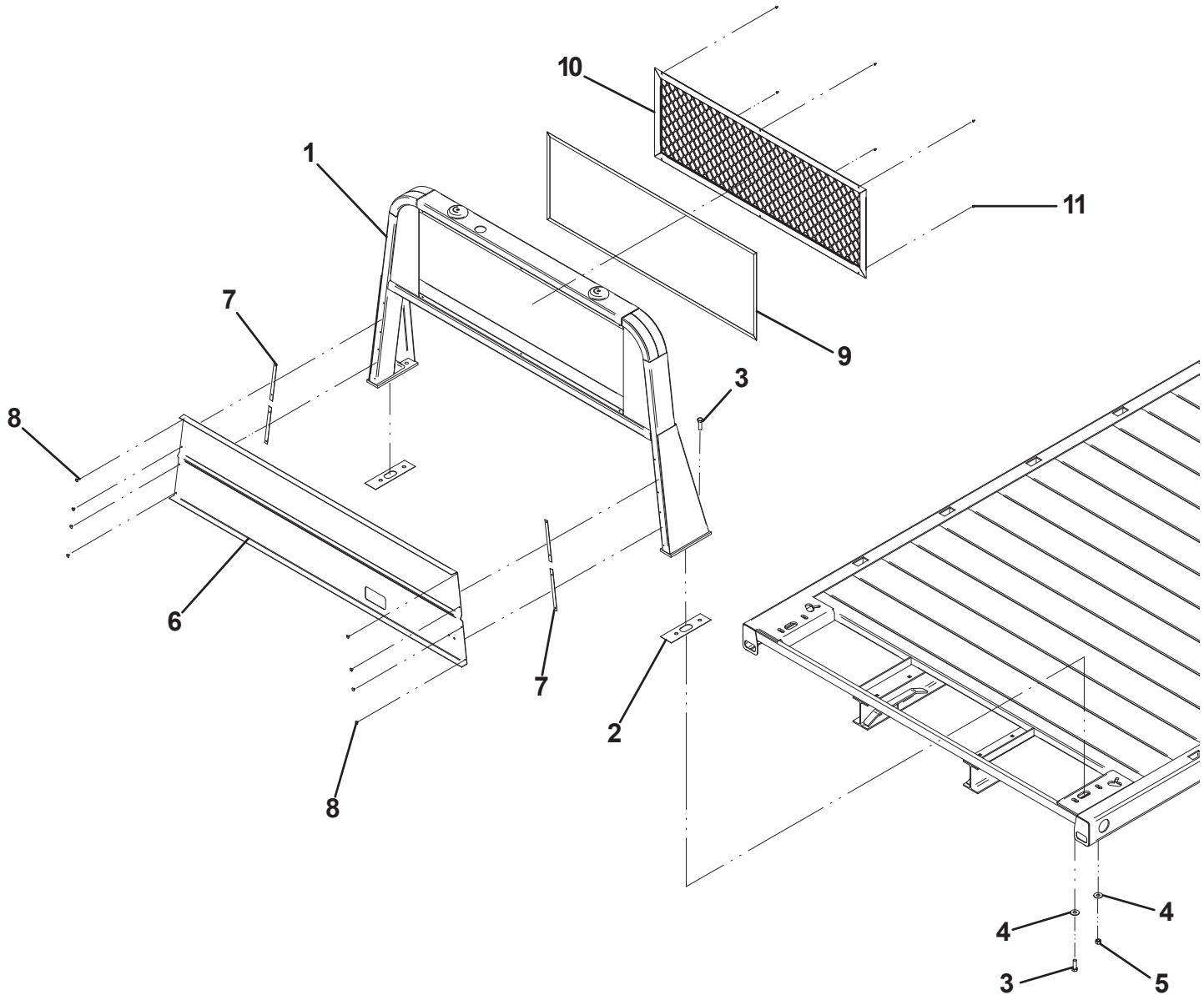

BUCKET REST HEADBOARD

ITEM	PART NO.	DESCRIPTION	QTY
1	1001132350	Lower Headboard Weldment	1
	1001139503	Lower Headboard Weldment	1
	1001141918	Lower Headboard Weldment	1
2	1001141889	Light Bar Bracket	2
3	7115222050	Capscrew, 0.75”-10NC x 2.50"	8
4	7950220141	Flatwasher, 0.75" ID	8
5	7660222308	Locknut, 0.75”-10NC	8
6	1001141875	Upper Headboard Weldment	1
7	7115181450	Capscrew, 0.50”-13NC x 1.75"	16
8	7950180143	Flatwasher, 0.50" ID	16
9	7660182304	Locknut, 0.50”-13NC	16
10	7894000042	Tie Strap	30
11	7701000058	Plug	16
12	641436	Capscrew, 0.25 -20NC x 4.50	2
13	7660142601	Locknut, 0.25" -20NC	2
14	7950140143	Flatwasher, 0.25" ID	4
15	7660142601	Locknut, 0.50”-13NC	2
16	7280000019	Clip	1

BUCKET REST HEADBOARD

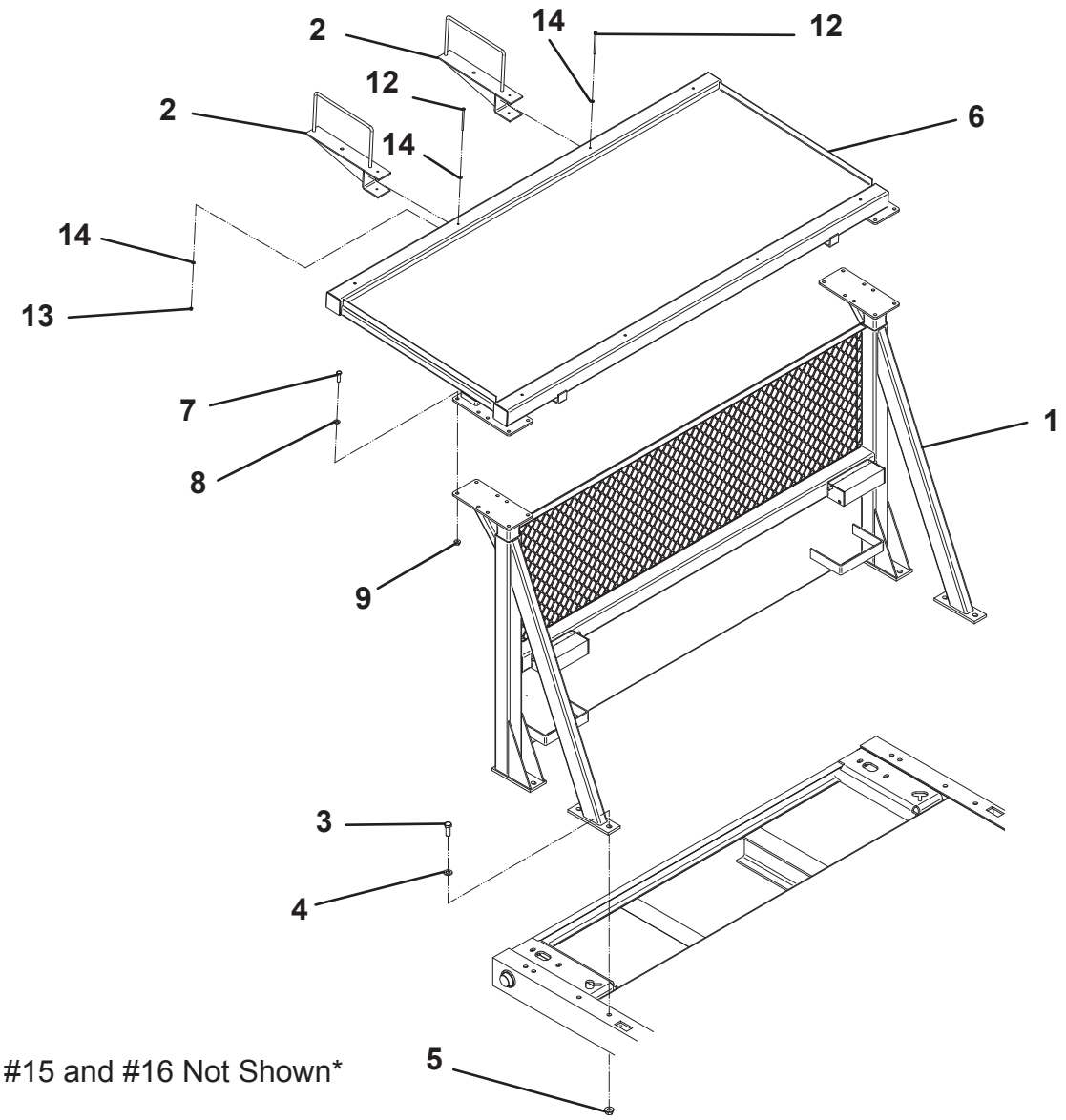

Item #10, #11, #15 and #16 Not Shown

STATIONARY HEADBOARD

ITEM	PART NO.	DESCRIPTION	QTY
		Stationary Headboards w/o Lights	
1	1001129171	Stationary Headboard, 48" Ford < 2011	1
	1001129173	Stationary Headboard, 48"	
	1001129165	Stationary Headboard, 57"	
	1001129167	Stationary Headboard, 62"	
	1001129169	Stationary Headboard, 69”	
2	3391000014	Screen Weldment, (48" & 57" Headboards)	1
	3391000017	Screen Weldment, (62" Headboards)	
	3391000018	Screen Weldment, (69" Headboards)	
3	4796000003	Gasket	1
4	7759000015	Rivet	8
5	4705000607	Shim	2
6	4705000608	Shim	2
7	7660182333	Locknut, 0.50”-20NF	8
8	7105180153	Capscrew, 0.50”-20NF x 2.00”	8
9	7950180153	Flatwasher, 0.50” ID	8
10	7701000049	Plug	2
11	7413000013	Push-In Fastener	4

ITEM	PART NO.	DESCRIPTION	QTY
		Stationary Headboards w/ Lights	
1	1001133225	Stationary Headboard, 69.00” w/ Lights	1
2	3391000018	Screen Weldment	1
3	4796000003	Gasket	1
4	7759000015	Rivet	8
5	4705000607	Shim	2
6	4705000608	Shim	2
7	7660182333	Locknut, 0.50”-20NF	8
8	7105180153	Capscrew, 0.50”-20NF x 2.00”	8
9	7950180153	Flatwasher, 0.50” ID	8
10	7701000049	Plug	2
11	7413000013	Push-In Fastener	4
12	7590000342	Light	8
13	7493000009	Grommet	8
14	1001133195	Harness	1

STATIONARY HEADBOARD

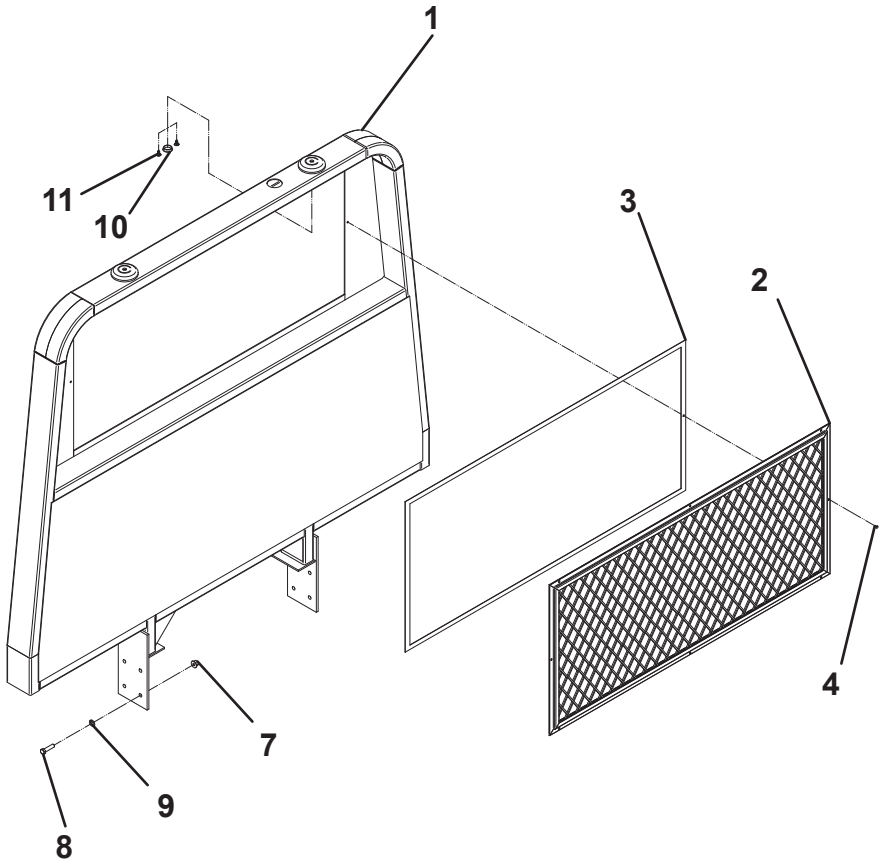

Item #5 and #6 Not Shown

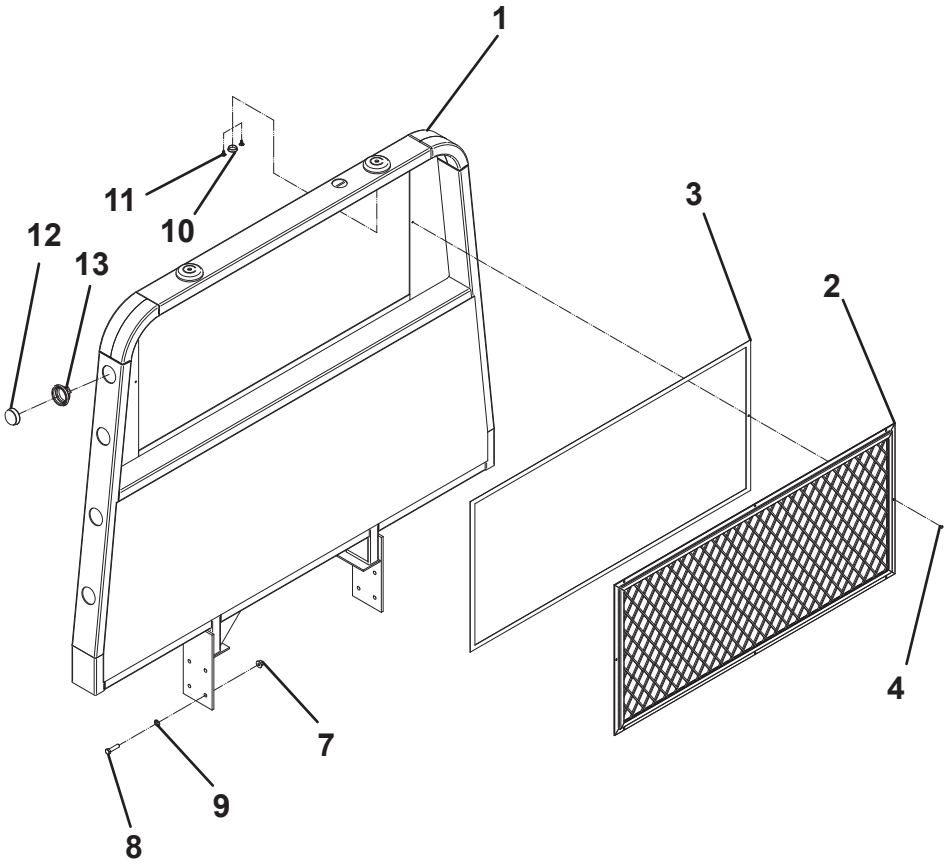

Item #5, #6 and #14 Not Shown

WORM GEAR WINCH

ITEM	PART NO.	DESCRIPTION	QTY
1	7970000121	Winch - 8,000 lb. Worm Gear	1
		(w/ std. remote free spool)	
	7970000142	Winch - 8,000 lb. Worm Gear	
		(w/ air remote free spool)	
	7970000123	Winch -10,000 lb. Worm Gear	
		(w/ std. remote free spool)	
	7970000140	Winch -10,000 lb. Worm Gear	
		(w/ air remote free spool)	
2	7626000014	Orbit Motor	1
3	7115181250	Capscrew, 0.50”-13NC x 1.50”	2
4	7950180400	Lockwasher, 0.50” ID	2
5	7115181464	Carriage Bolt, 0.50”-13NC x 1.75”	3
		(steel decks)	
	7115182864	Carriage Bolt, 0.50”-13NC x 3.5”	
		(steel transporters)	
	7115181864	Carriage Bolt, 0.50”-13NC x 2.25”	
		(aluminum decks)	
	7115183264	Carriage Bolt, 0.50”-13NC x 4.00”	
		(aluminum transporters)	
6	7115181864	Carriage Bolt, 0.50”-13NC x 2.25”	1
		(steel decks)	
	7115183264	Carriage Bolt, 0.50”-13NC x 4.00”	
		(steel transporters)	
	7115182264	Carriage Bolt, 0.50”-13NC x 2.75”	
		(aluminum decks)	
	7115183664	Capscrew, 0.50”-13NC x 4.50”	
		(aluminum transporters)	
7	7950180153	Flatwasher, 0.50” ID	4
8	7660182601	Locknut, 0.50”-13NC	4
9	4062000318	Bar (transporters only)	2
10	7248000063	Cable, 0.38” dia x 56’ (8,000lb winch)	1
	7248000064	Cable, 0.44” dia x 56’ (10,000lb winch)	

WORM GEAR WINCH

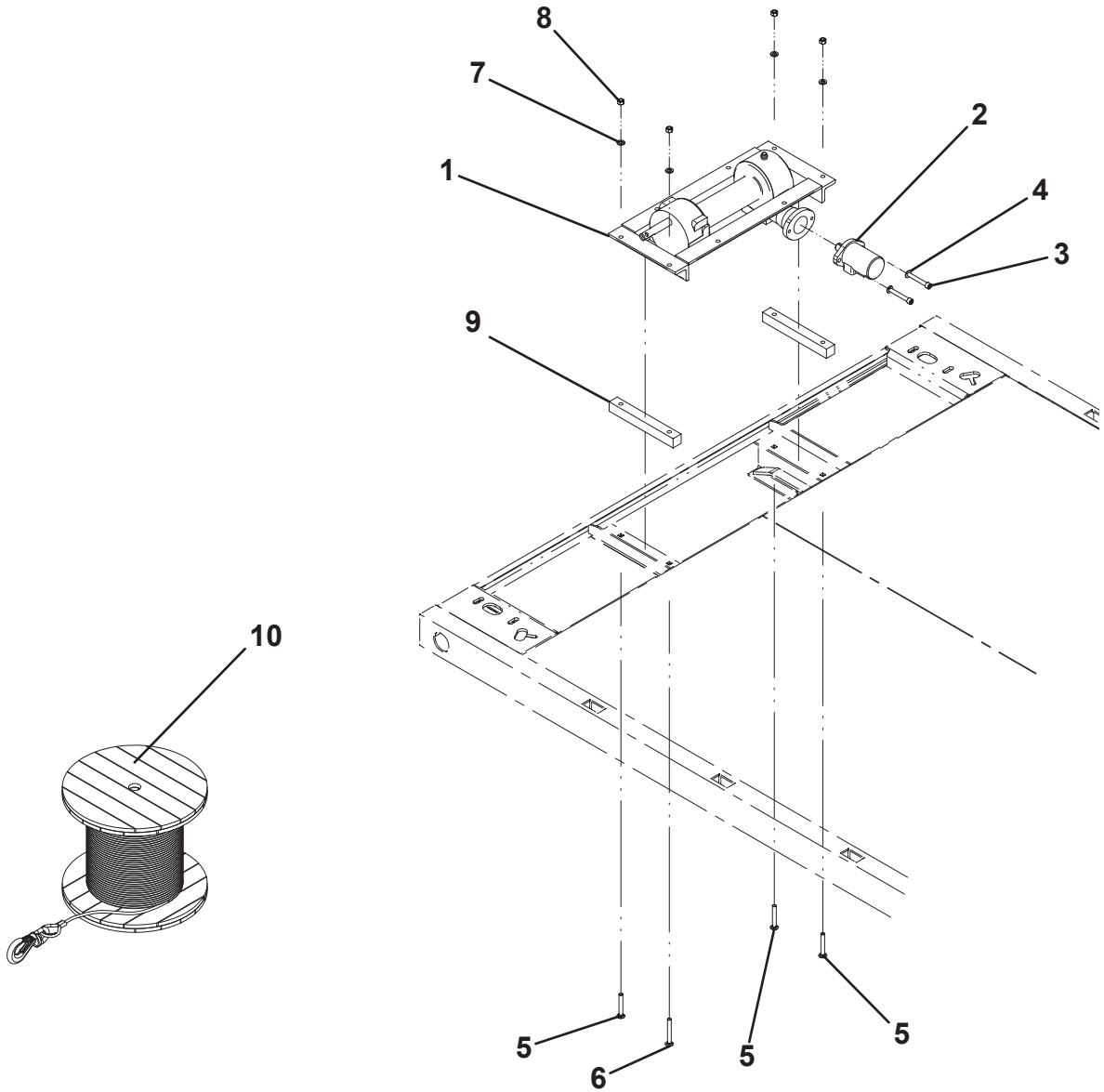

PLANETARY GEAR WINCH

ITEM	PART NO.	DESCRIPTION	QTY
1	7970000056	Winch - 8,000 lb. Planetary Gear	1
		(w/ std. remote free spool)	
2	7115181464	Carriage Bolt, 0.50”-13NC x 1.75”	3
		(steel decks)	
	7115182864	Carriage Bolt, 0.50”-13NC x 3.50”	
		(steel transporters)	
	7115181864	Carriage Bolt, 0.50”-13NC x 2.25”	
		(aluminum decks)	
	7115183264	Carriage Bolt, 0.50”-13NC x 4.00”	
		(aluminum transporters)	
3	7115181864	Carriage Bolt, 0.50”-13NC x 2.25”	1
		(steel decks)	
	7115183264	Carriage Bolt, 0.50”-13NC x 4.00”	
		(steel transporters)	
	7115182264	Carriage Bolt, 0.50”-13NC x 2.75”	
		(aluminum decks)	
	7115183664	Capscrew, 0.50”-13NC x 4.50”	
		(aluminum transporters)	
4	7950180153	Flatwasher, 0.50” ID	4
5	7660182601	Locknut, 0.50”-13NC	4
6	4062000318	Bar (transporters only)	2
7	7248000063	Cable, 0.38” dia x 56’	1

PLANETARY GEAR WINCH

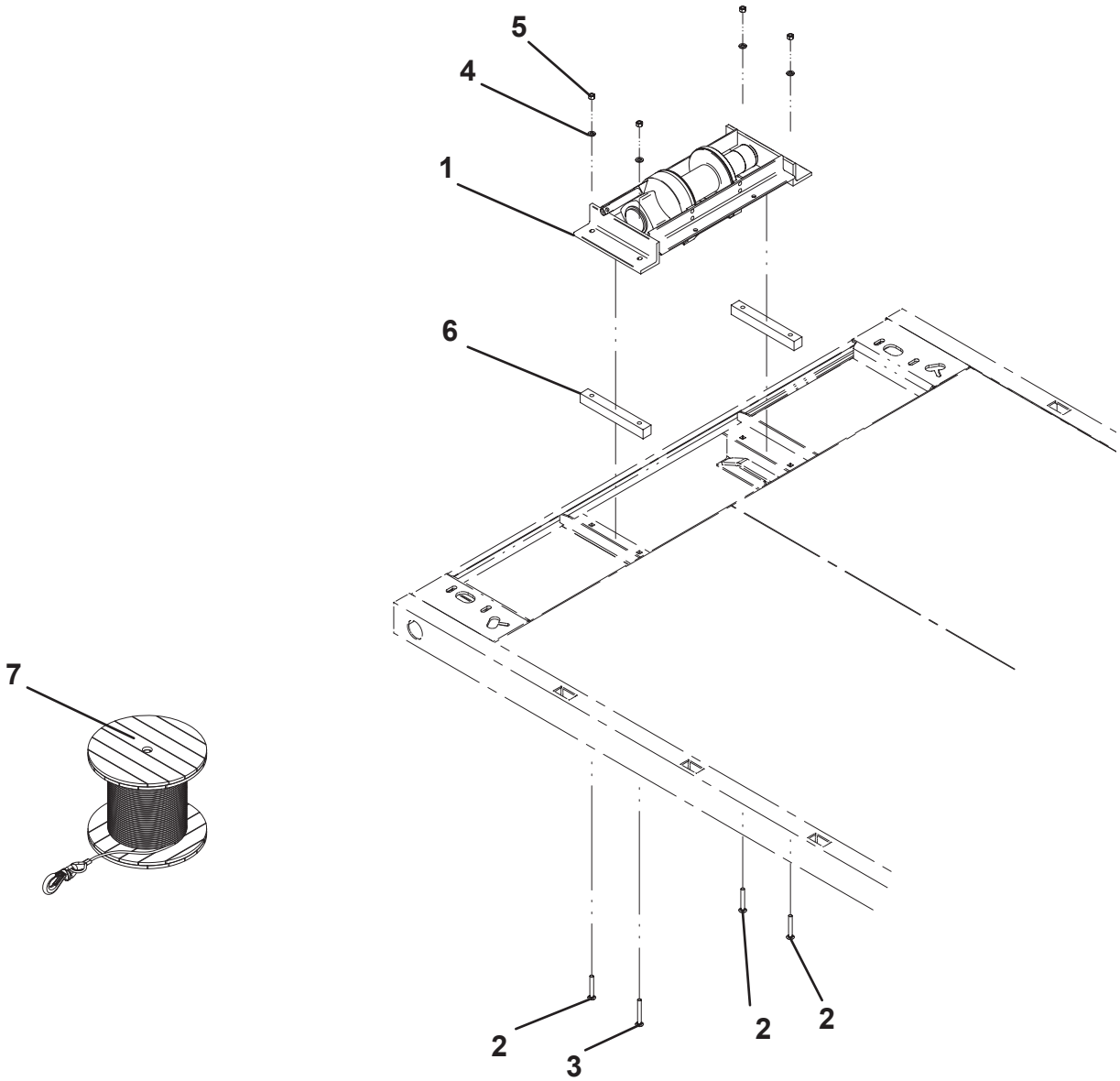

WORM GEAR WINCH CABLE ROLLER GUIDE / TENSIONER PLATE

ITEM	PART NO.	DESCRIPTION	QTY
1	3178000433*	Bracket Weld	1
2	7115181464	Carriage Bolt, 0.50”-13NC x 1.75”	4
3	7950180153	Flatwasher, 0.50” ID	4
4	7660182601	Locknut, 0.50”-13NC	4
5	4706003766	Plate	1
6	7843000035	Spring	2
7	4912000130*	Roller	1
8	4806000014*	Shaft	1
9	4912000394	Roller	2
10	4806000011*	Shaft	2
11	7209000011*	Bushing	6
12	7949000034*	Spacer	4
13	7754000022*	Retaining Ring	6

WORM GEAR WINCH CABLE ROLLER GUIDE / TENSIONER PLATE

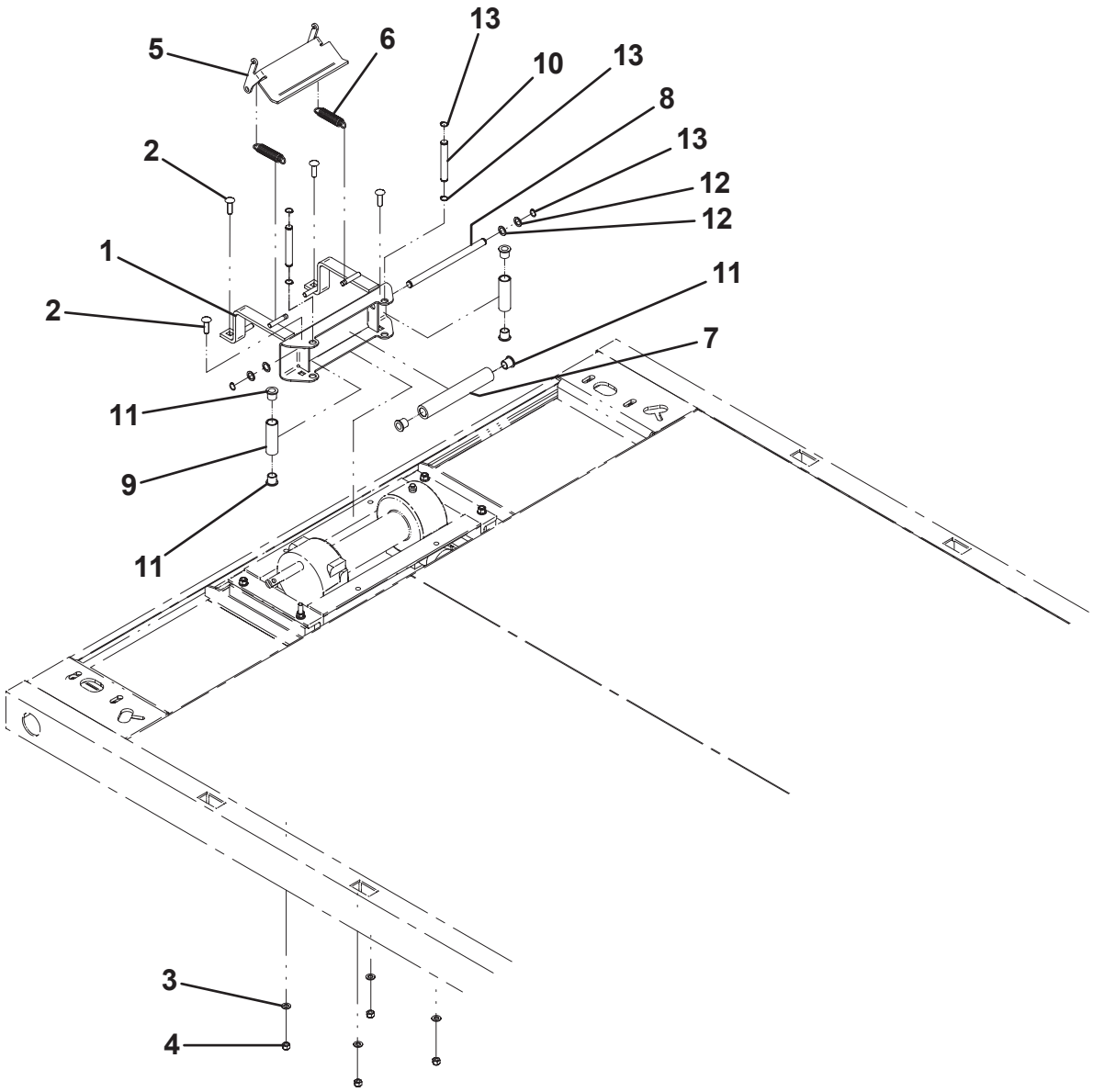

PLANETARY GEAR WINCH CABLE ROLLER GUIDE / TENSIONER PLATE

ITEM	PART NO.	DESCRIPTION	QTY
1	3178000347	Bracket Weld	1
2	7115181050	Capscrew, 0.50”-13NC x 1.25”	2
3	7115180850	Capscrew, 0.50”-13NC x 1.00”	4
4	7950180153	Flatwasher, 0.50” ID	6
5	4706003792	Plate	1
6	7843000035	Spring	2
7	4912000345*	Roller	1
8	4691000421*	Shaft	1
9	7209000011*	Bushing	2
10	7949000034*	Spacer	2
11	7754000022*	Retaining Ring	2

PLANETARY GEAR WINCH CABLE ROLLER GUIDE / TENSIONER PLATE

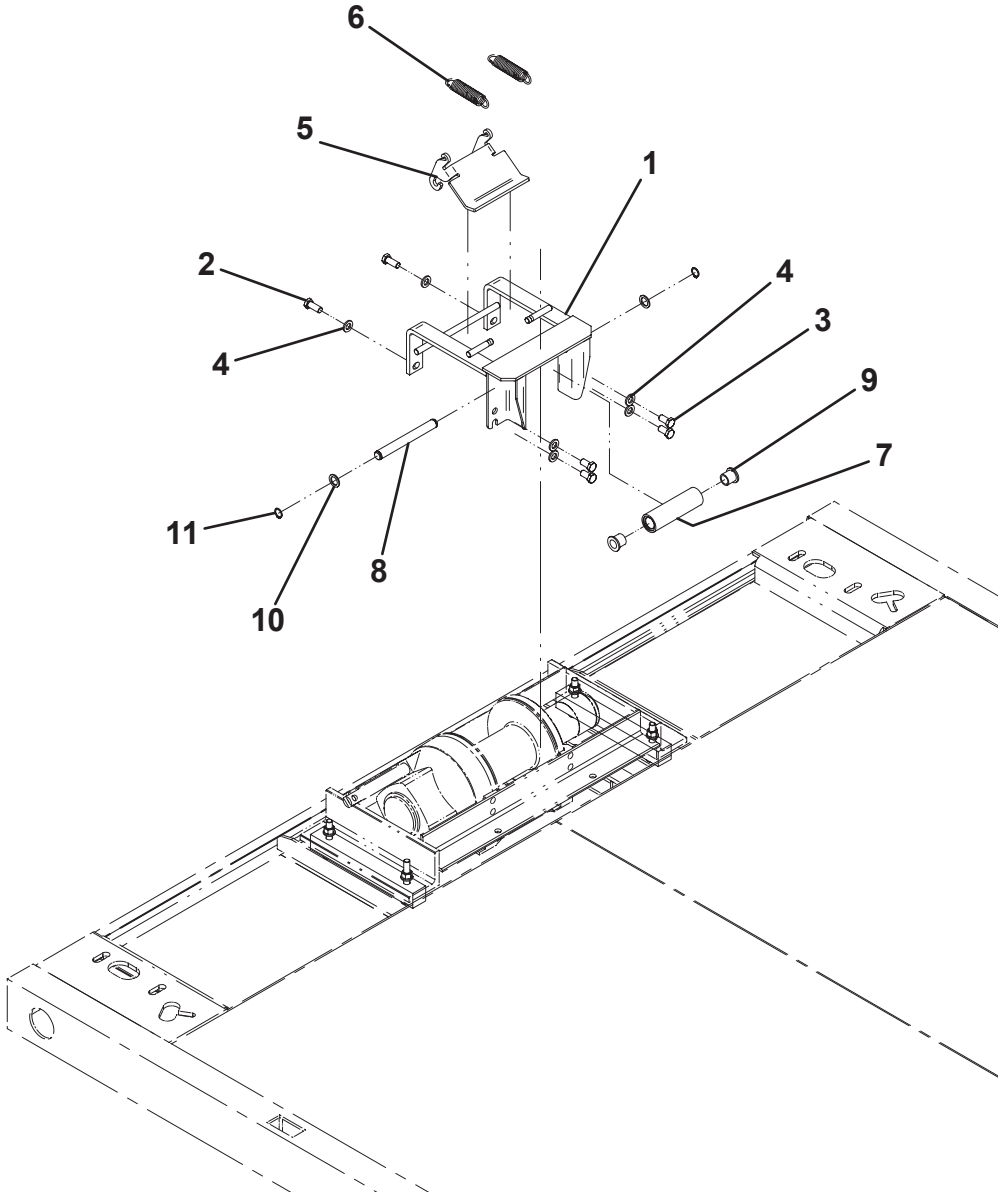

PLANETARY GEAR WINCH CABLE ROLLER GUIDE / TENSIONER PLATE

ITEM	PART NO.	DESCRIPTION	QTY
		Sliding Winch Kit -1001142545	
1	1001142543*	Sliding Winch Assembly	1
2	1001138522	Bolt, 0.50”-13NC x 2.25"	4
3	7950180153	Flatwasher, 0.50" ID	4
4	7660182601	Locknut, 0.50”-13NC	4
5	1001145934*	Sliding Winch, HLF Kit	1
6	1001146028*	Accessory Handle	1
7	1001145935*	Air Freespool, Kit	1
8	7248000064	Wire Rope, 0.44" x 56' w/ Swivel Hook	1
		Cam Lock Assy -1001144498	
9	1001144499	Cam Weldment	1
10	4254000005	Cap	1
11	4691000186	Pin	1
12	4763000184	Rod	1
13	7843000006	Spring	1
14	7440030000	Grease Fitting	1
15	7253000002	Grease Fitting Cap	1
		Roller Guide Assy -1001145780	
16	1001145636	Mount	1
17	4912000345	Tube	2
18	4691000421	Pin	2
19	4912000130	Tube	2
20	4806000014	Shaft	2
21	7209000011	Bushing	8
22	7949000034	Spacer	8
23	7754000022	Retaining Ring	8
24	1001150704	Plate	1
25	7115140650	Capscrew, 0.25”-20NC x 0.75"	2
26	7660140001	Nut, 0.25”-20NC	2
27	7950140143	Flatwasher, 0.25" ID	2

ITEM	PART NO.	DESCRIPTION	QTY
		Sliding Winch Assy -1001142543	
28	1001144486	Sliding Winch, Base	1
29	1001144491	Sliding Winch, Slide	1
30	7970000166	Winch, Air Freespool	1
	7970000158	Winch, Manual Freespool	
31	7115180850	Capscrew, 0.50”-13NC x 1.00"	8
32	7950180153	Flatwasher, 0.50" ID	20
33	440287	Bearing	12
34	3321701	Nut, 0.437”-20NC	12
35	1001142550	Plate	1
36	1001142461	Tensioner	1
37	1001137970	Bolt, 0.50”-13NC x 4.50"	1
38	7660182601	Locknut, 0.50”-13NC	3
39	1001142553	Rod	2
40	7660180001	Nut, 0.50”-13NC	2
41	7843000004	Spring	2
42	7950180161	Flatwasher, 0.50" ID	2
43	1001145780*	Roller Guide Assembly	1
44	1001144498*	Cam Lock	1
45	1001138546	Bolt, 0.38”-16NC x 1.00"	3
46	7950160000	Lockwasher, 0.38" ID	3
47	7950160162	Flatwasher, 0.38" ID	3
48	1001144543	Stop Block	2
49	7115180650	Capscrew, 0.50”-13NC x 0.75"	4
50	1001139199	Bolt, 0.50”-13NC x 1.75"	4
51	7950180000	Lockwasher, 0.59" ID	8
52	1001139343	Bolt, 0.50”-13NC x 1.25"	4
53	1001142962	Decal	2
		Sliding Winch HLF -1001145934	
54	1001145963*	Hose Kit	1
55	7445041043	Adapter	2
56	7445040431	Elbow	2
57	1001144448	Adapter	2
58	7445080872	Elbow	2
59	7950170000	Lockwasher, 0.44" ID	2

PLANETARY GEAR WINCH CABLE ROLLER GUIDE / TENSIONER PLATE

ITEM	PART NO.	DESCRIPTION	QTY
		Sliding Winch Handle -1001146028	
60	1001146029	Handle	1
61	1001146027	Nut, 0.50”-20NC	1
62	651822	Capscrew, 0.50"-20NC x 2.75"	1
63	4763000348	Rod	1
64	7660180234	Nut, 0.50”-20NF	1
65	7551000017	Knob	1
		Hose Kit -1001145963	
66	1001145987	Hose Assembly	1
67	1001145980	Hose Assembly	2
		Sliding Winch Air Freespool	
68	8597650001	Loom	1.5ft
69	7443000173	Fitting	2
70	1001127985	Adapter	1
71	7565000016	Airline	5ft

* Part Numbers Sold As Kits. See Breakdowns For Kit Parts

PLANETARY GEAR WINCH CABLE ROLLER GUIDE / TENSIONER PLATE

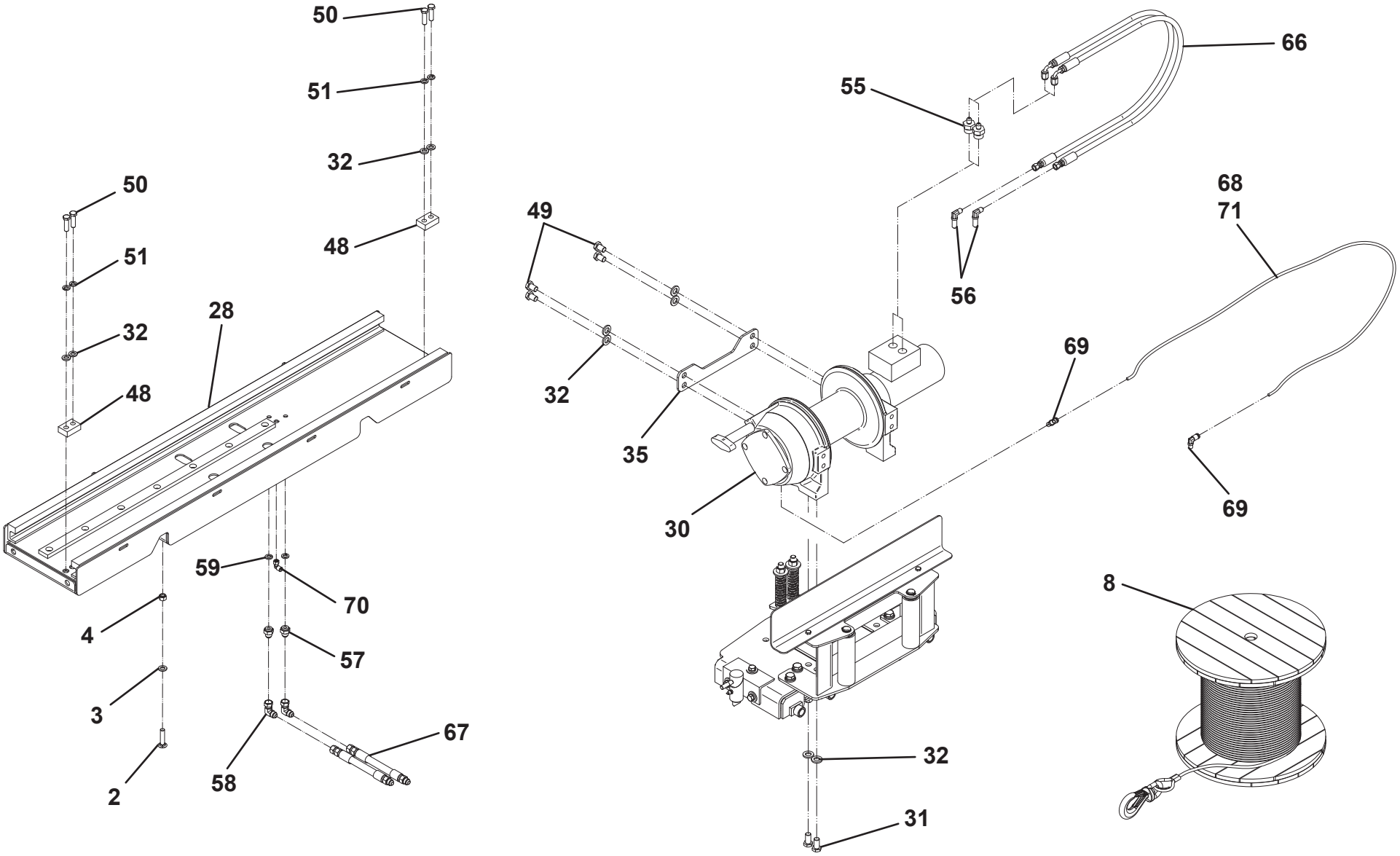

PLANETARY GEAR WINCH CABLE ROLLER GUIDE / TENSIONER PLATE

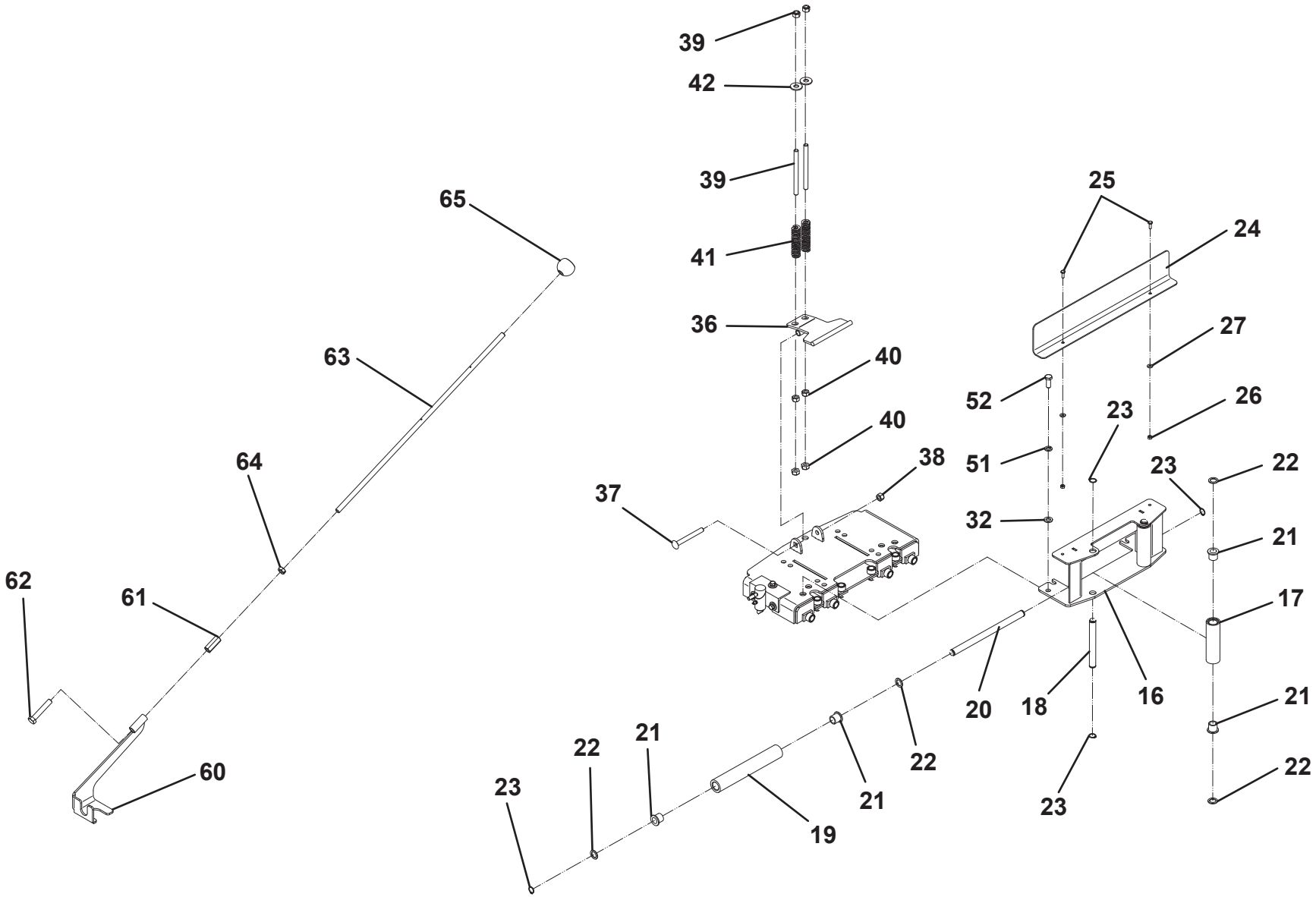

PLANETARY GEAR WINCH CABLE ROLLER GUIDE / TENSIONER PLATE

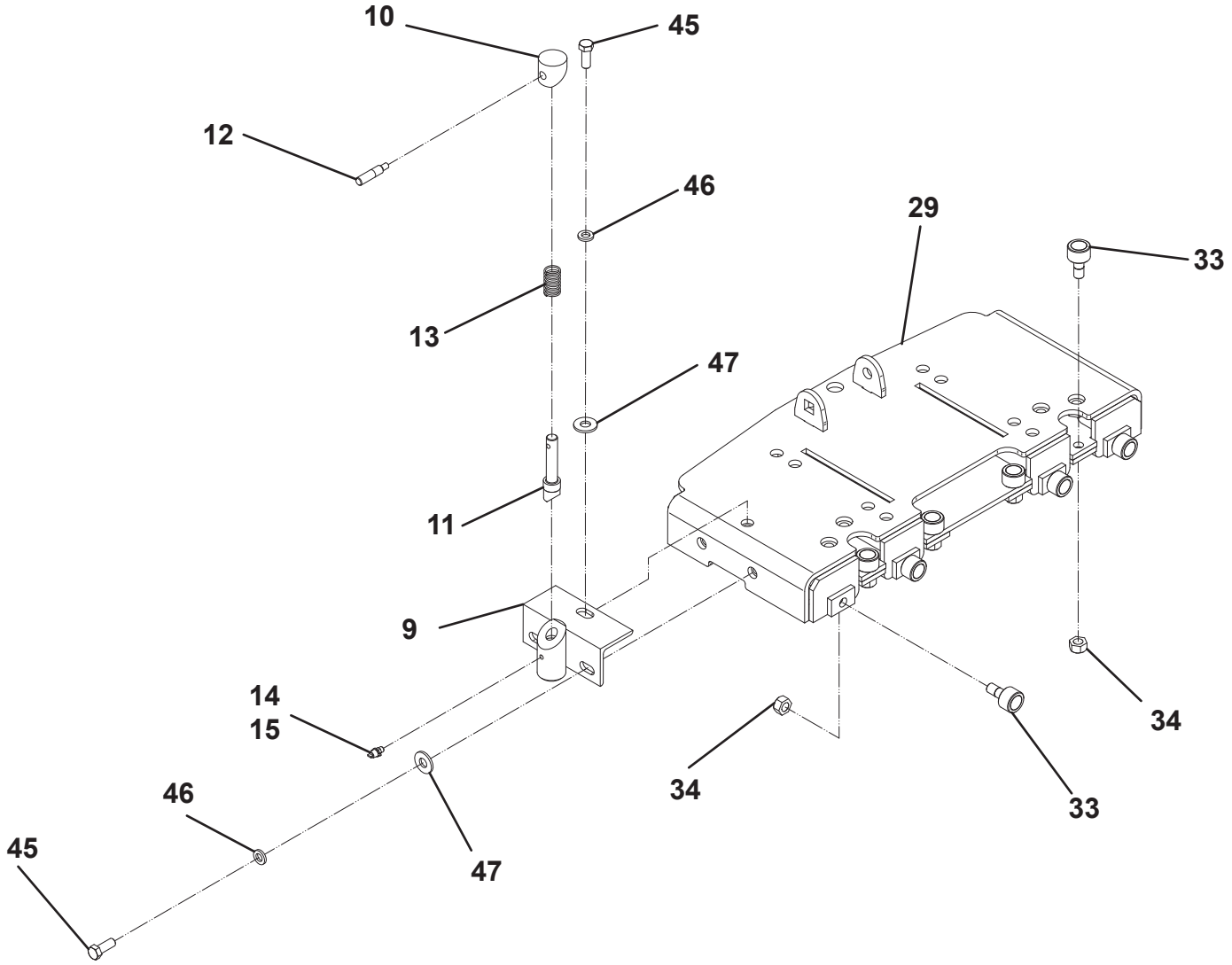

PLANETARY GEAR WINCH CABLE ROLLER GUIDE / TENSIONER PLATE

THIS PAGE INTENTIONALLY LEFT BLANK

MANUAL REMOTE FREE SPOOL - BOLT-ON HEADBOARD

ITEM	PART NO.	DESCRIPTION	QTY
1	4587000004*	Lever	1
2	4209000328*	Bushing	1
3	7082000010*	Nylon Washer	2
4	7950180161*	Flatwasher, 0.50” ID	1
5	7309000002*	Coupling	1
6	7691000046*	Clevis Pin	1
7	7660182631*	Locknut, 0.50”-20NF	1
8	7950180143*	Flatwasher, 0.50” ID	2
9	4763000348*	Rod	1
10	7660180234*	Nut, 0.50”-20NF	1
11	4178000673*	Bracket	1
12	7115150850*	Capscrew, 0.31”-18NC x 1.00”	2
13	7950150161*	Flatwasher, 0.31” ID	4
14	7660152601*	Locknut, 0.31”-18NC	2
15	4209000147*	Bushing (worm gear winch)	1
	4209000145*	Bushing (planetary gear winch)	
16	7690051274*	Pin	2
17	7949000030*	Nylon Washer	1
18	7843000027*	Spring	1
19	7551000017*	Knob	1
20	4632000009*	Trim Lok	1

*also available in complete Remote Free Spool Installation:
P/N 2970000021 for 8,000 / 10,000 lb. worm gear winch
P/N 2970000019 for 8,000 lb. planetary gear winch

MANUAL REMOTE FREE SPOOL - BOLT-ON HEADBOARD

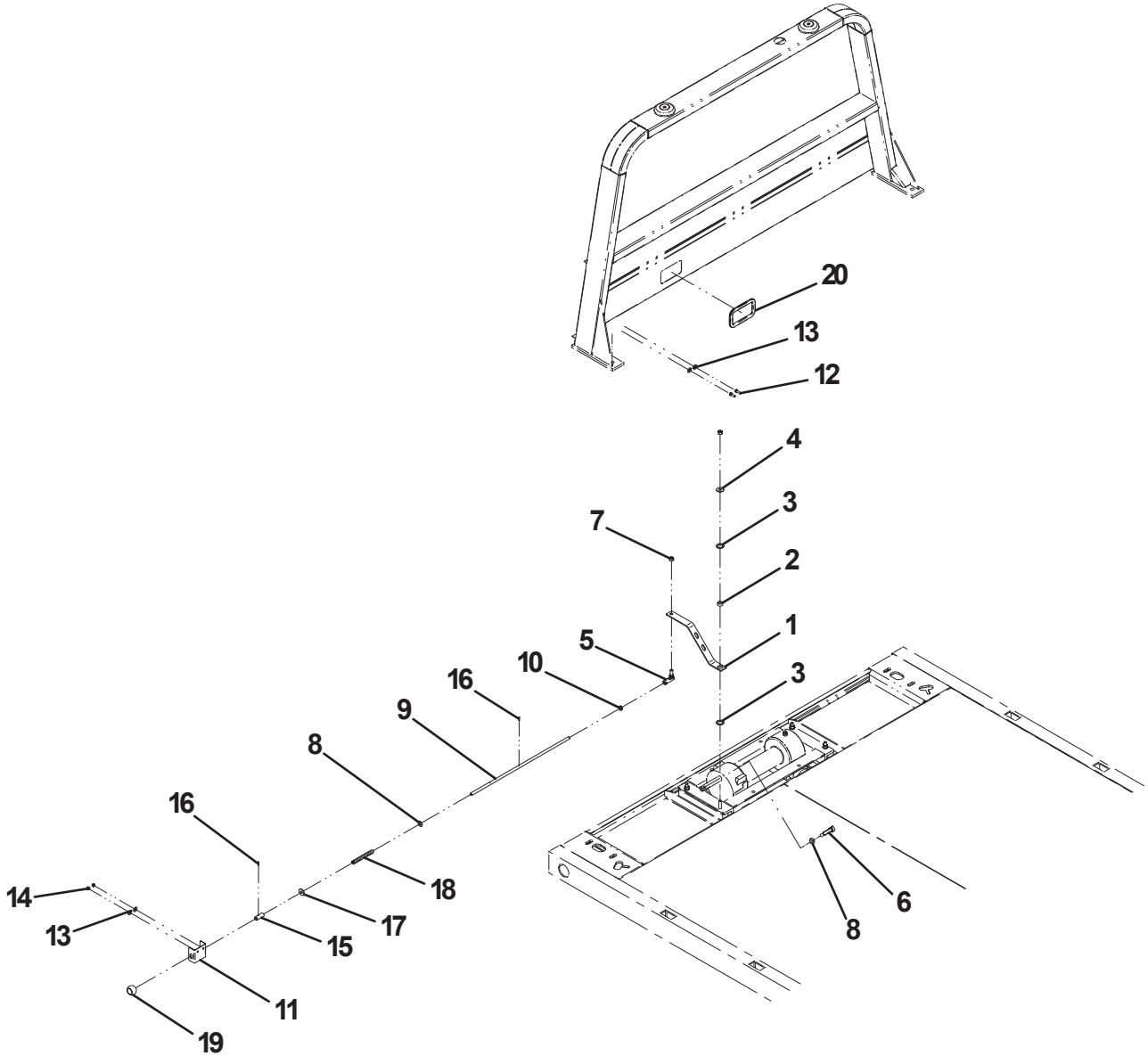

DUAL MANUAL REMOTE FREE SPOOL - BOLT-ON HEADBOARD

ITEM	PART NO.	DESCRIPTION	QTY
1	4209000147	Bushing	3
2	4763000348	Rod, 26.56"	1
3	4587000004	Bracket	1
4	1001156246	Bar	1
5	1001156247	Bar	1
6	1001156245	Bracket	2
7	7690051274	Pin	3
8	7950180143	Flatwasher, 0.50" ID	2
9	7660180234	Nut, 0.50”-20NF	2
10	7309000002	Ball Joint	2
11	1001156249	Spring	1
12	7082000010	Washer, 1.00" ID	1
13	4209000146	Bushing	1
14	7950180161	Flatwasher, 0.50" ID	1
15	7551000017	Knob	2
16	7115150850	Capscrew, 0.31”-18NC x 1.00"	4
17	7950150161	Flatwasher, 0.31" ID	8
18	7660152601	Locknut, 0.31”-18NC	4
19	1001156248	Rod, 57.50"	1
20	7660182631	Locknut, 0.50”-20NF	2
21	4632000009	Trim	1
22	7949000030	Washer, 0.53" ID	1
23	7691000046	Pin	1

DUAL MANUAL REMOTE FREE SPOOL - BOLT-ON HEADBOARD

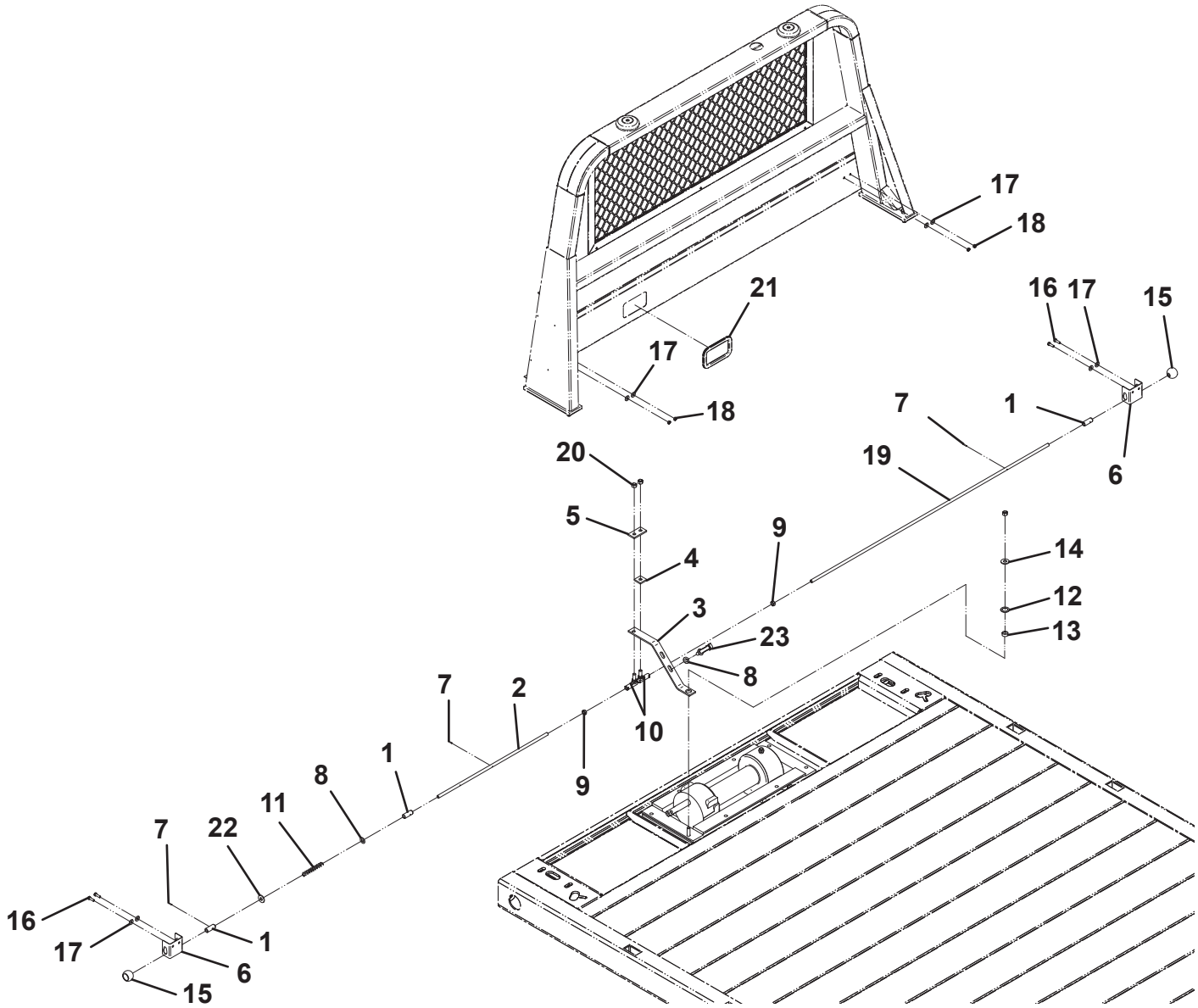

MANUAL REMOTE FREE SPOOL - STATIONARY HEADBOARD

ITEM	PART NO.	DESCRIPTION	QTY
1	4587000005*#	Lever	1
2	4209000328*#	Bushing	1
3	7082000010*#	Nylon Washer	2
4	7950180161*#	Flatwasher, 0.50” ID	1
5	7309000002*#	Coupling	1
6	7691000046*#	Clevis Pin	1
7	7660182631*#	Locknut, 0.50”-20NF	1
8	7950180143*#	Flatwasher, 0.50” ID	2
9	4763000348*#	Rod	1
10	7660180234*#	Nut, 0.50”-20NF	1
11	4178000674*	Bracket (steel decks)	1
	4017001499#	Bracket (aluminum decks)	
12	4178000673*#	Bracket	1
13	7115150850*#	Capscrew, 0.31”-18NC x 1.00”	4
14	7950150161*#	Flatwasher, 0.31” ID	8
15	7660152601*#	Locknut, 0.31”-18NC	4
16	4209000147*#	Bushing (worm gear winch)	1
	4209000145*#	Bushing (planetary gear winch)	
17	7690051274*#	Pin	2
18	7949000030*#	Nylon Washer	1
19	7843000027*#	Spring	1
20	7551000017*#	Knob	1

*also available in complete Remote Free Spool Installation-aluminum deck:
P/N 2970000053 for 8,000 / 10,000 lb. worm gear winch
P/N 2970000051 for 8,000 lb. planetary gear winch

*also available in complete Remote Free Spool Installation-steel deck:
P/N 2970000052 for 8,000 / 10,000 lb. worm gear winch
P/N 2970000050 for 8,000 lb. planetary gear winch

MANUAL REMOTE FREE SPOOL - STATIONARY HEADBOARD

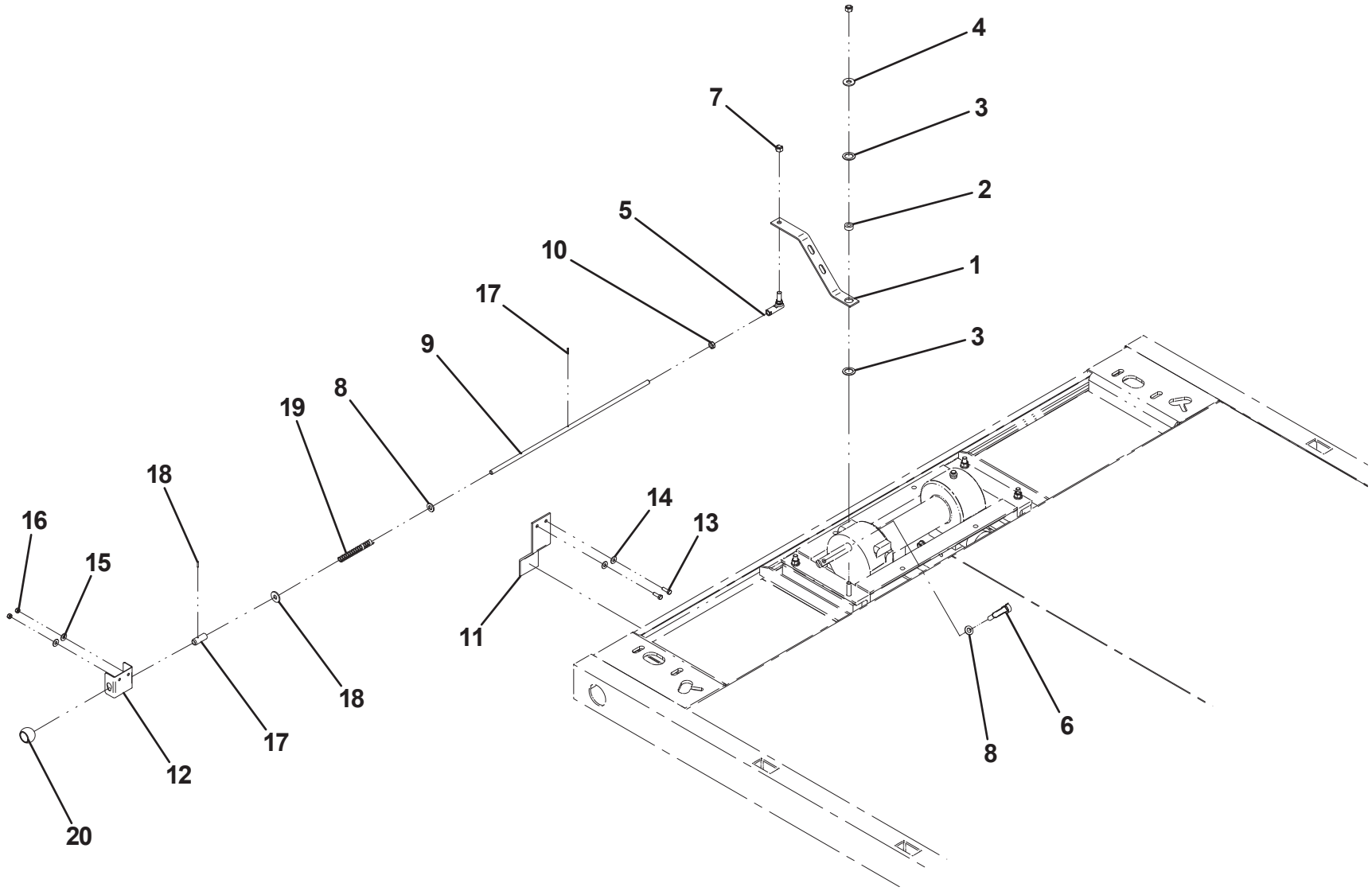

DUAL MANUAL REMOTE FREE SPOOL - STATIONARY HEADBOARD

ITEM	PART NO.	DESCRIPTION	QTY
1	4209000147	Bushing	3
2	4763000348	Rod, 26.56"	1
3	4587000005	Bracket	1
4	1001156246	Bar	1
5	1001156247	Bar	1
6	1001156245	Bracket	2
7	7690051274	Pin	3
8	7950180143	Flatwasher, 0.50" ID	2
9	7660180234	Nut, 0.50”-20NF	2
10	7309000002	Coupling	2
11	1001156249	Spring	1
12	7082000010	Washer, 1.00" ID	1
13	4209000146	Bushing	1
14	7950180161	Flatwasher, 0.50" ID	1
15	7551000017	Knob	2
16	7115150850	Capscrew, 0.31”-18NC x 1.00"	4
17	7950150161	Flatwasher, 0.31" ID	16
18	7660152601	Locknut, 0.31”-18NC	8
19	1001156248	Rod, 57.50"	1
20	7660182631	Locknut, 0.50”-20NF	2
21	4178000674	Bracket	2
22	7949000030	Washer, 0.53" ID	1
23	7691000046	Pin	1
24	7115151850	Capscrew, 0.31”-18NC x 2.25"	4
25	4679000208	Pad	2

DUAL MANUAL REMOTE FREE SPOOL - STATIONARY HEADBOARD

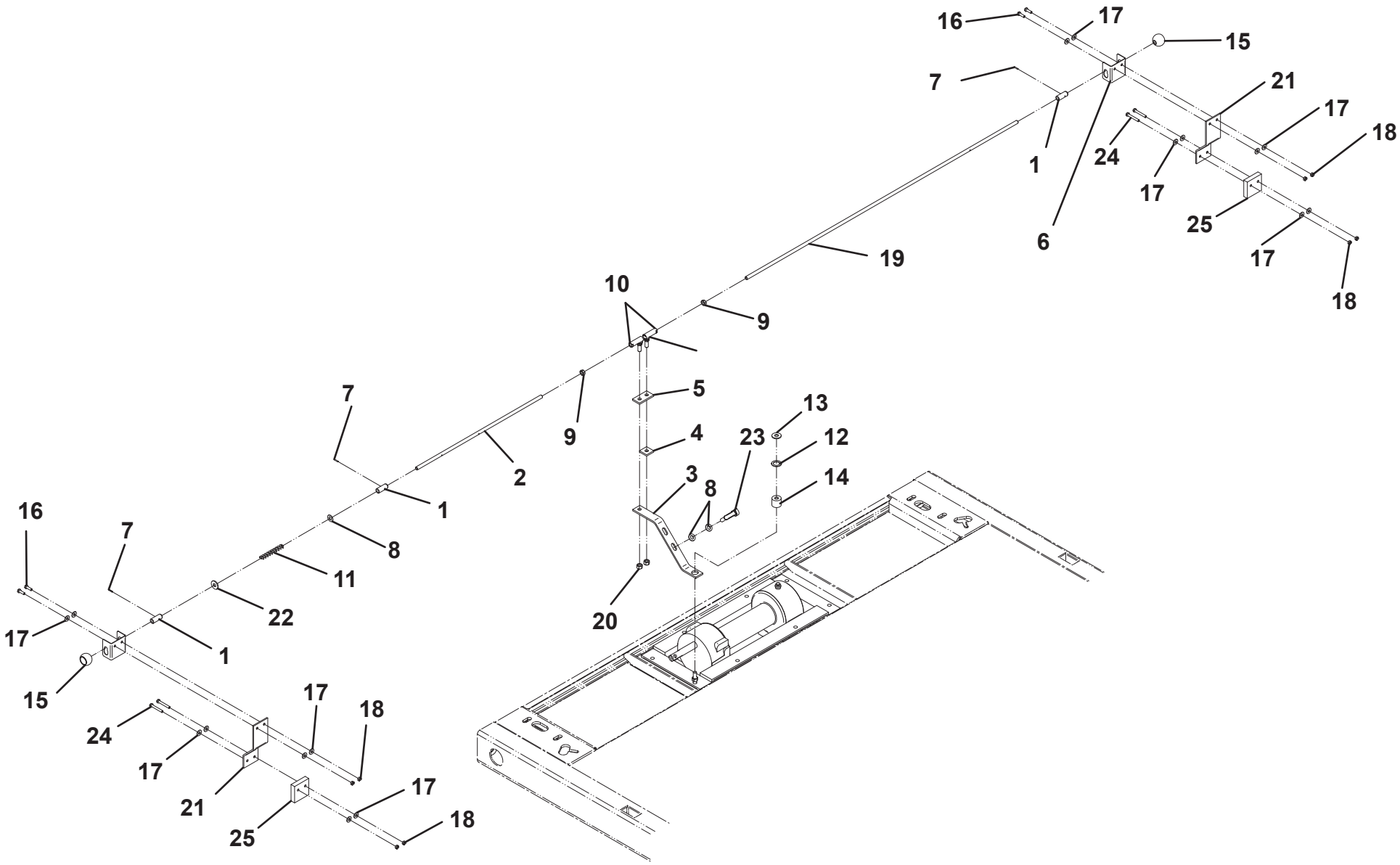

MANUAL REMOTE AIR FREE SPOOL

ITEM	PART NO.	DESCRIPTION	QTY
1	7565000014	Airline Tubing	*
2	7935000182	Air Valve	2
3	7443000364	Fitting	5
4	7640000002	Air Exhaust Muffler	2
5	7443000154	Fitting	1
6	7443000155	Fitting	1
7	7443000156	Nipple	2
8	7935000120	Pressure Protection Valve	1
9	7443000152	Plug	1
10	7443000366	Fitting	1
11	7935000248	Air Regulator	1
12	7443000371	Tee	1
13	7443000365	Fitting	2
14	8597650001	Loom	*
15	7935000229	Shuttle Valve	1
16	7894000004	Tie Strap	*
17	7330000675	Decal LH	1
18	7330000676	Decal RH	1
19	7443000443	Union	1
20	7565000016	Airline Tubing	*

*- Quantity varies depending on deck length and chassis

MANUAL REMOTE AIR FREE SPOOL

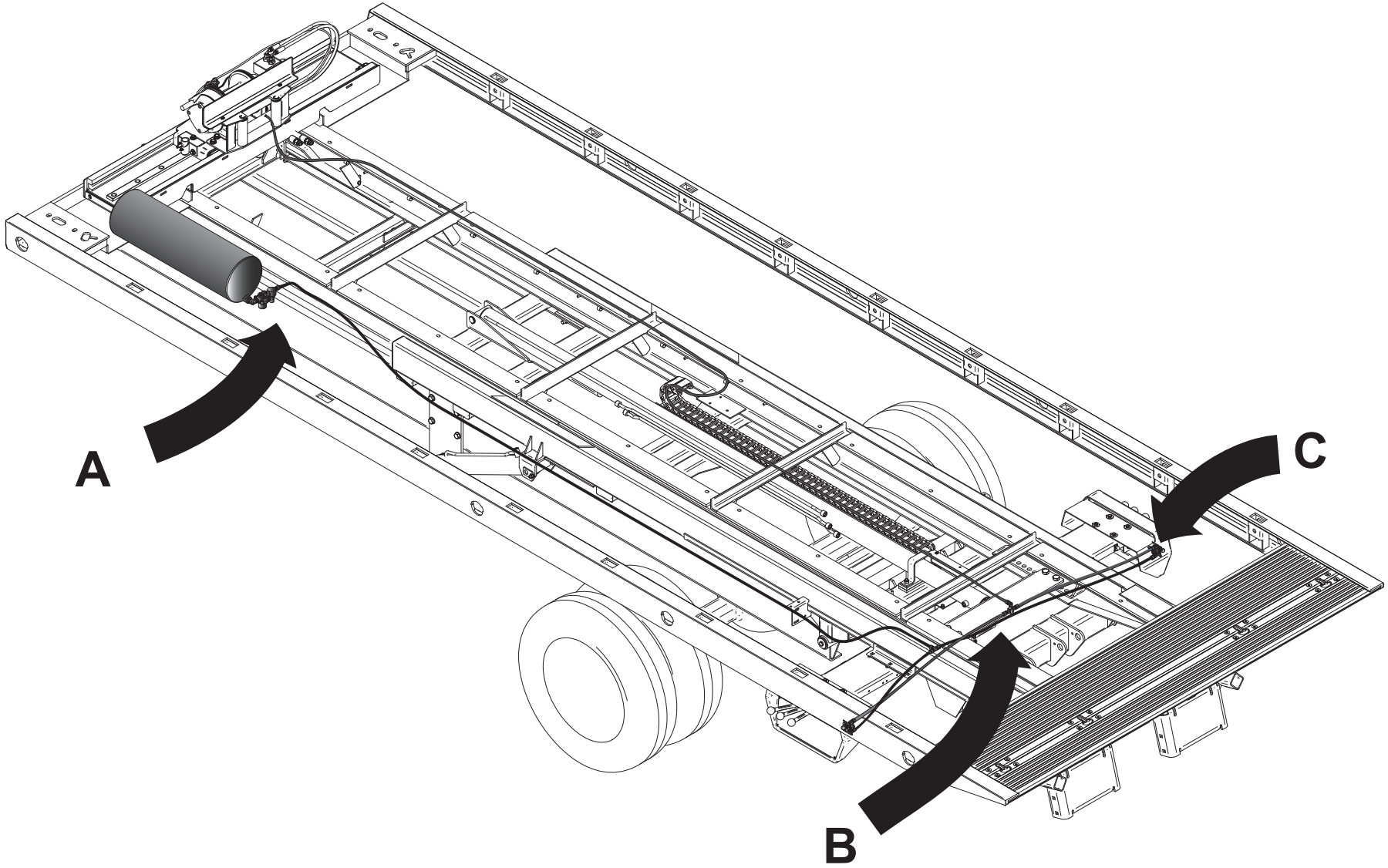

MANUAL REMOTE AIR FREE SPOOL

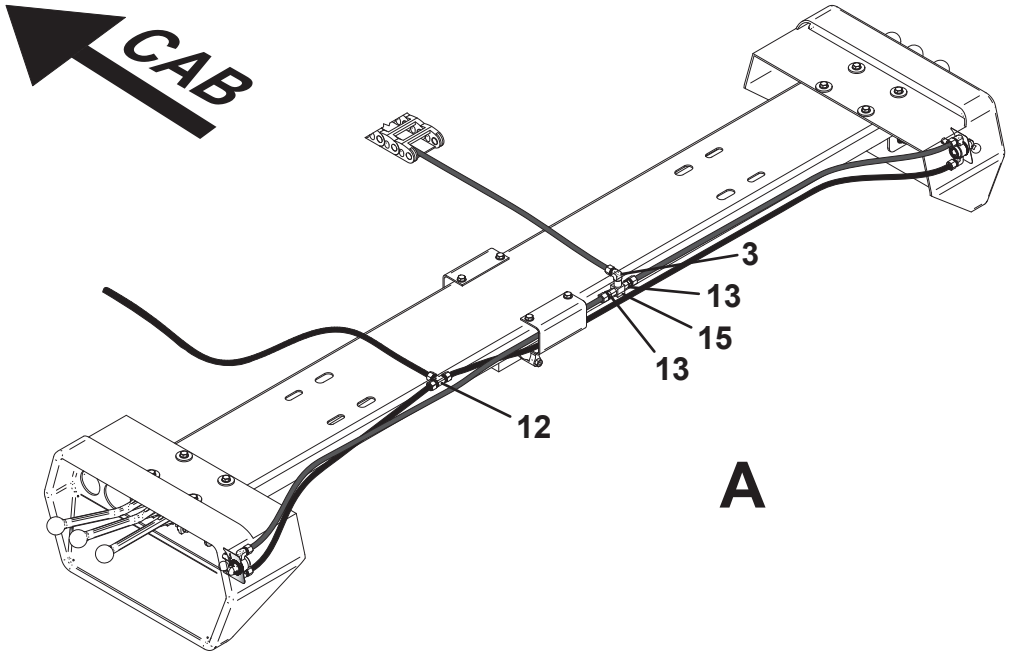

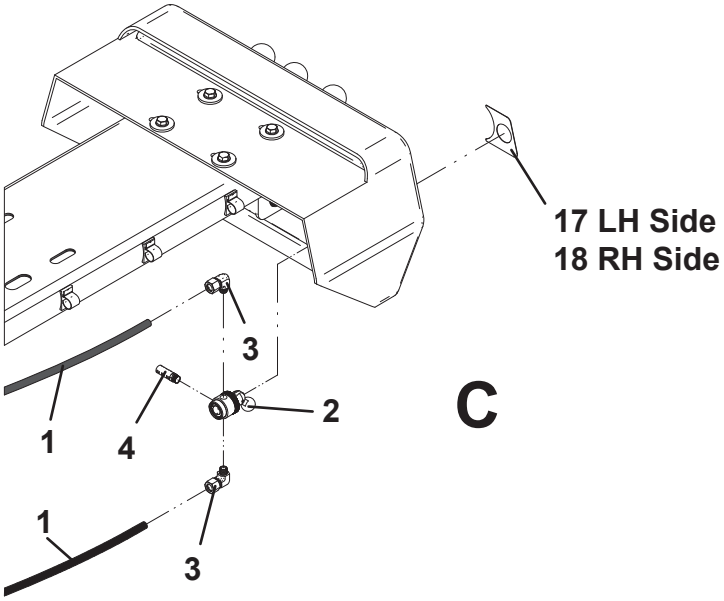

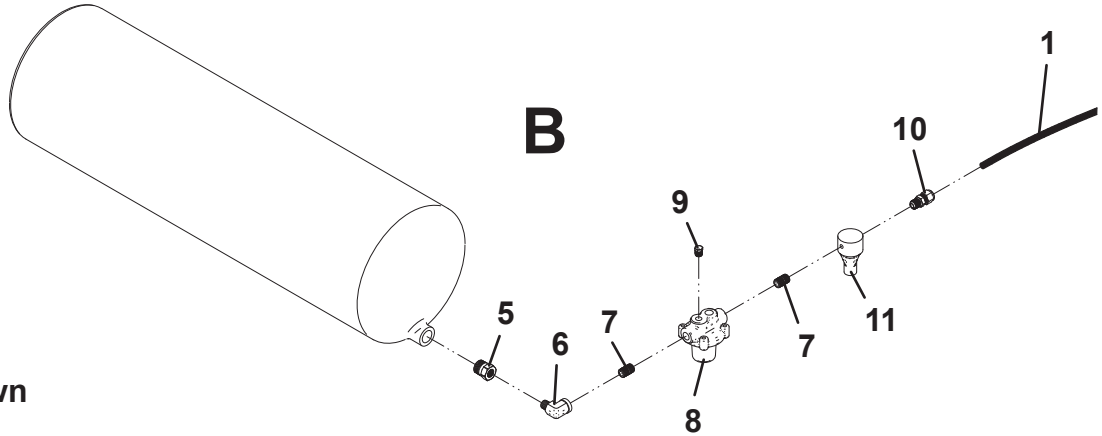

#14, 16, 19 & 20 Not Shown

THIS PAGE INTENTIONALLY LEFT BLANK

SUBFRAME (OUTBOARD TILT CYLINDERS)

ITEM	PART NO.	DESCRIPTION	QTY
1	1001131644	Subframe - Standard	1
	1001134510	Subframe - Galvanized	
2	3905000012	Trunnion Weld	1
3	3320000236	Cylinder	1
4	3320000122	Cylinder	2
5	4178000805	Saddle Bracket	2
6	7949000008	Washer, 2.25" OD x 1.52" ID	2
7	4691000573	Pin	2
8	7115162450	Capscrew, 0.38”-16NC x 3.00"	2
9	7660162601	Locknut, 0.38”-16NC	12
10	4691000429	Pin	1
11	7754000006	Retaining Ring	2
12	4178000367	Bracket	1
13	4679000151	Wear Pad	1
14	7660182601	Locknut, 0.50”-13NC	2
15	4497000358	Gusset	2
16	3691000166	Pin	2
17	7105181650	Capscrew, 0.50”-20NF x 2.00"	8
18	7950180153	Flatwasher, 0.50" ID	8
19	7660182333	Locknut, 0.50”-20NF	8
20	7115161050	Capscrew, 0.38”-16NC x 1.25"	4
21	4209000337	Bushing	8
22	7274000046	Clamp	2
23	7105202250	Capscrew, 0.63”-18NF x 2.75"	4
24	7660202347	Locknut, 0.63”-18NF	12
25	4017001271	Bracket	2
26	7701000063	Plug	4
27	3691000273	Pin	2
28	7115180650	Capscrew, 0.50”-13NC x 0.75"	2
29	7949000072	Washer, 2.00" OD x 0.50 ID	2
30	7950200242	Flatwasher, 0.63" ID	8
31	4706005958	Plate	1
32	7114100818	Capscrew, #10 -24NC x 1.00"	4
33	7660102604	Locknut, #10-24UNC	4
34	7950100151	Flatwasher, 0.19" ID	8
35	7105201850	Capscrew, 0.63”-18NF x 2.25"	8
36	4209000358	Bushing	2
37	3017000103	Roll Cylinder Angle	1
38	7115221650	Capscrew, 0.75"-10NC x 2.00"	4
39	7660222308	Locknut, 0.75”-10NC	4
40	7701000048	Plug	4
41	7701000051	Plug	6
42	7082000017	Bearing	4
43	3558000013	Hold Down Weldment	1
44	4679000153	Pad	2
45	7118161026	Capscrew, 0.38”-16NC x 1.25"	6
46	4679000221	Pad	2
47	4812000071	Shim	2
48	4812000072	Shim	2
49	7114151218	Capscrew, 0.31”-18NC x 1.50"	4
50	7660152601	Locknut, 0.31”-18NC	4

*included in Hold Down Weld, P/N 3558000014

SUBFRAME (OUTBOARD TILT CYLINDERS)

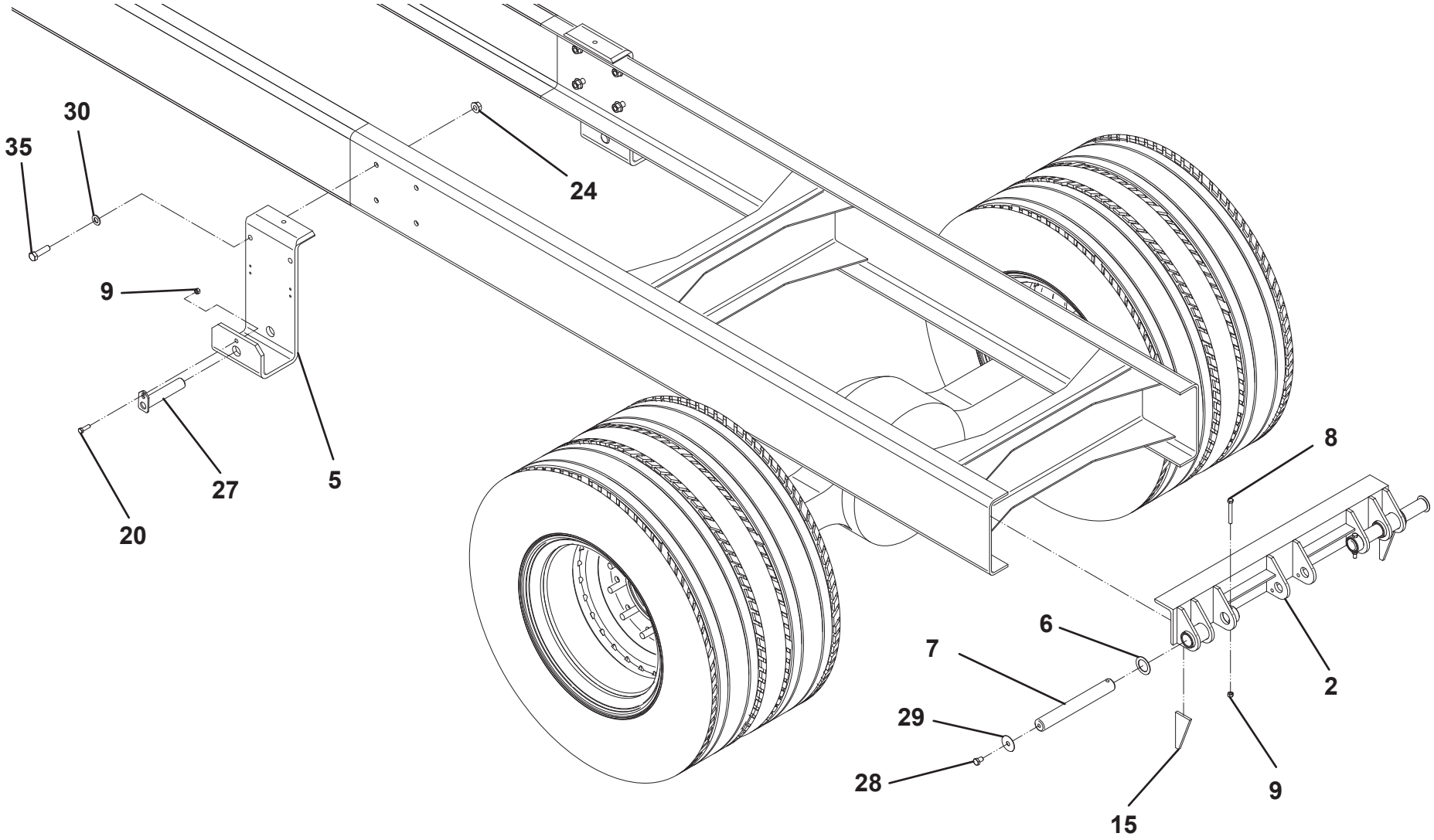

SUBFRAME (OUTBOARD TILT CYLINDERS)

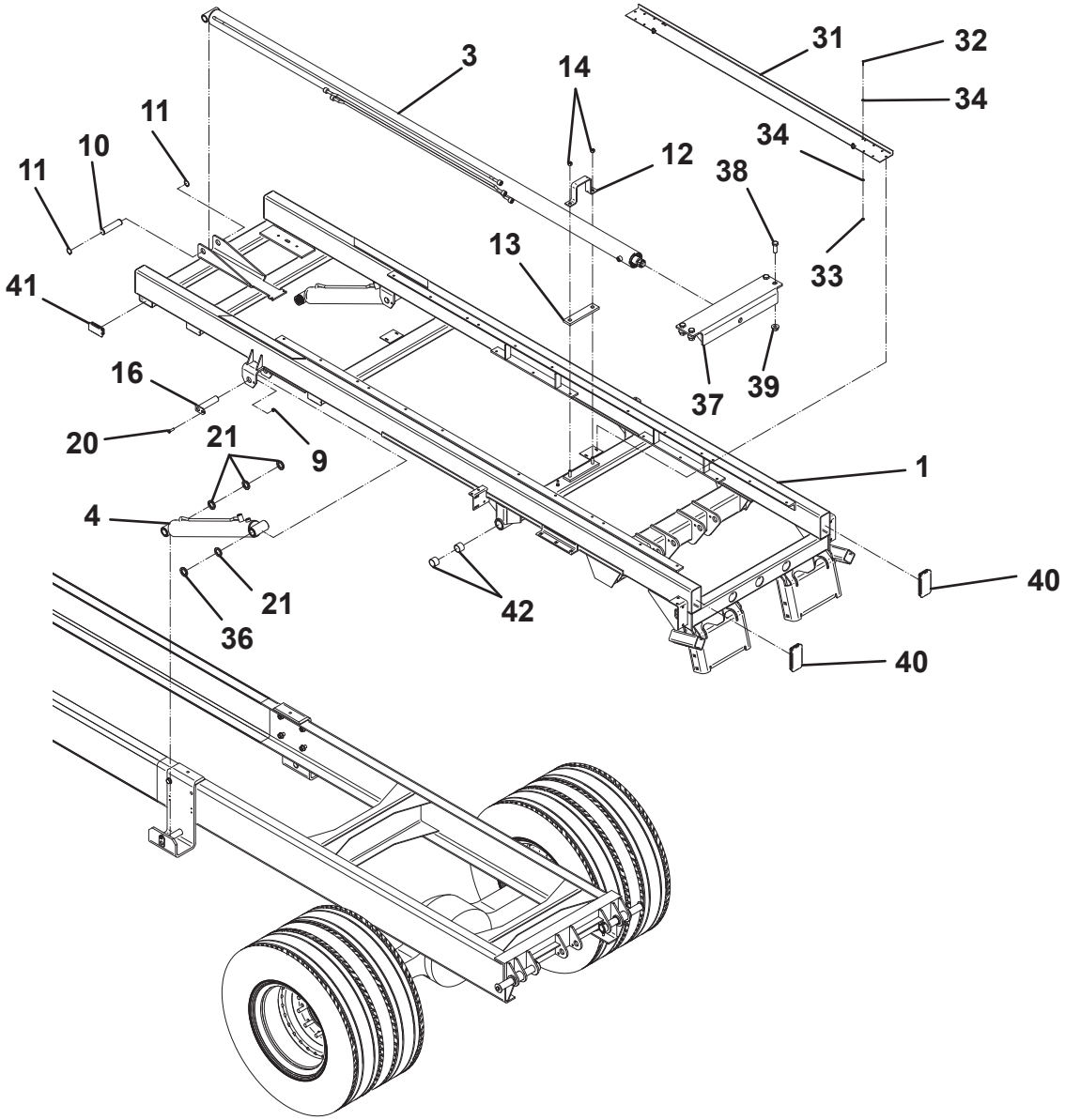

SUBFRAME (OUTBOARD TILT CYLINDERS)

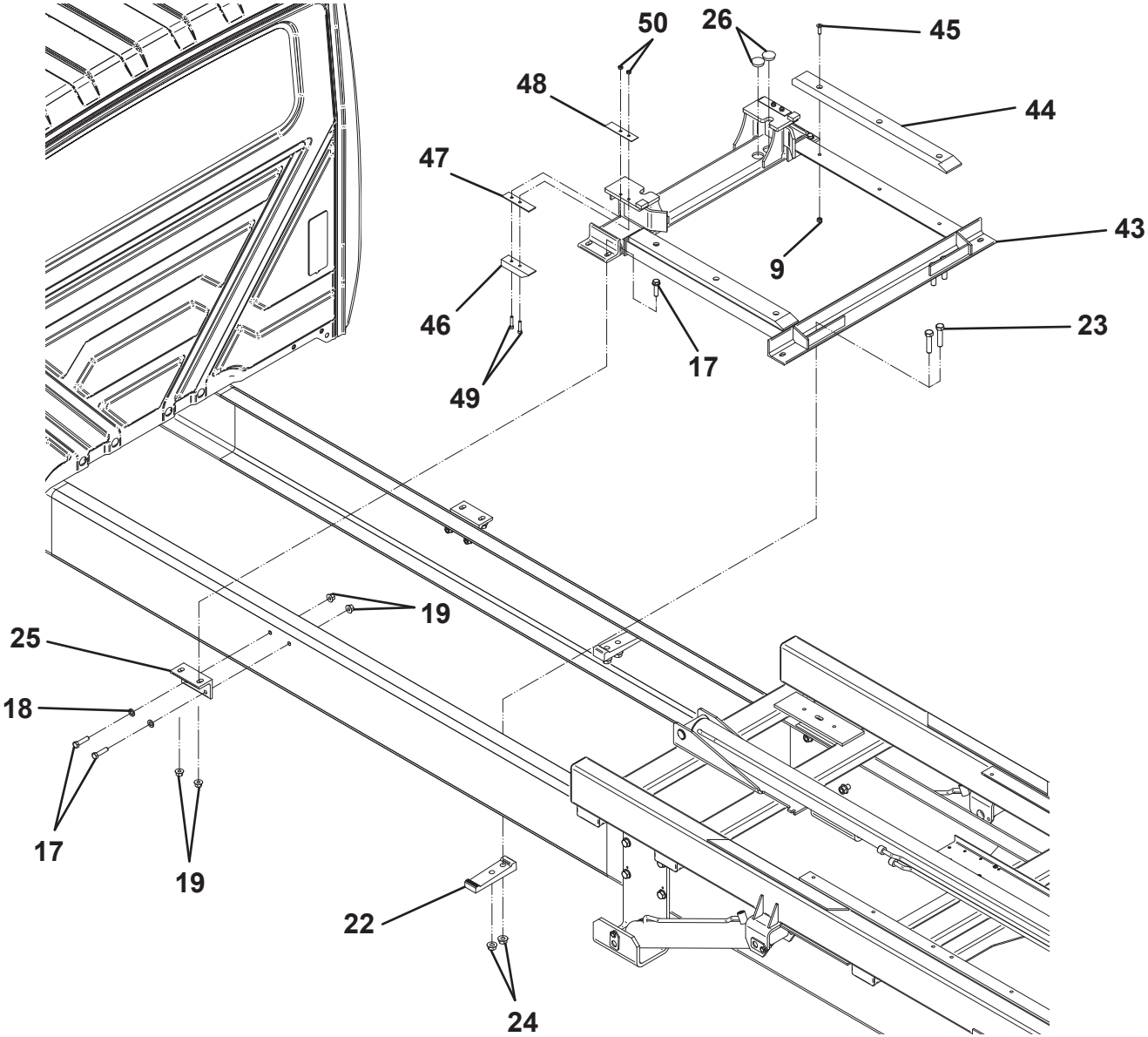

SUBFRAME (INBOARD TILT CYLINDERS)

ITEM	PART NO.	DESCRIPTION	QTY
1	1001135177	Subframe - Standard	1
	1001135178	Subframe - Galvanized	
2	3905000012	Trunnion Weld	1
3	3320000236	Cylinder	1
4	3320000120	Cylinder	2
5	3316000054	Crossmember Weldment	1
6	7949000008	Washer, 2.25" OD x 1.52" ID	2
7	4691000573	Pin	2
8	7115162450	Capscrew, 0.38”-16NC x 3.00"	2
9	7660162601	Locknut, 0.38”-16NC	12
10	4691000429	Pin	1
11	7754000006	Retaining Ring	2
12	4178000367	Bracket	1
13	4679000151	Wear Pad	1
14	7660182601	Locknut, 0.50”-13NC	2
15	4497000358	Gusset	2
16	3691000166	Pin	4
17	7950180153	Flatwasher, 0.50" ID	10
18	7105181650	Capscrew, 0.50”-20NF x 2.00"	10
19	7660182333	Locknut, 0.50”-20NF	10
20	7115160950	Capscrew, 0.38”-16NC x 1.25"	4
21	7274000046	Clamp	2
22	7105202250	Capscrew, 0.63”-18NF x 2.75"	4
23	7660202347	Locknut, 0.63”-18NF	4
24	4017001250	Angle	2
25	1001134995	Bar	2
26	7701000063	Plug	4
27	7115180650	Capscrew, 0.50”-13NC x 0.75"	2
28	7949000072	Washer, 2.00" OD x 0.50 ID	2
29	4706005958	Plate	1
30	7114100818	Capscrew, #10 -24NC x 1.00"	4
31	7660102604	Locknut, #10-24UNC	4
32	7950100151	Flatwasher, 0.19" ID	8
33	3017000103	Roll Cylinder Angle	1
34	7115221650	Capscrew, 0.75"-10NC x 2.00"	4
35	7660222308	Locknut, 0.75”-10NC	4
36	1001134994	Pad	6
37	7786000007	Screw, 0.31”-18NC x 2.00"	4
38	741512	Screw, 0.31"	2

ITEM	PART NO.	DESCRIPTION	QTY
39	7660152601	Locknut, 0.31”-18NC	6
40	7701000048	Plug	4
41	7701000051	Plug	2
42	7082000017	Bearing	4
43	3558000013	Hold Down Weldment	1
44	4679000153	Pad	2
45	7118161026	Capscrew, 0.38”-16NC x 1.25"	6
46	4679000221	Pad	2
47	4812000071	Shim	2
48	4812000072	Shim	2
49	7114151218	Capscrew, 0.31”-18NC x 1.50"	4

*included in Hold Down Weld, P/N 3558000014

SUBFRAME (INBOARD TILT CYLINDERS)

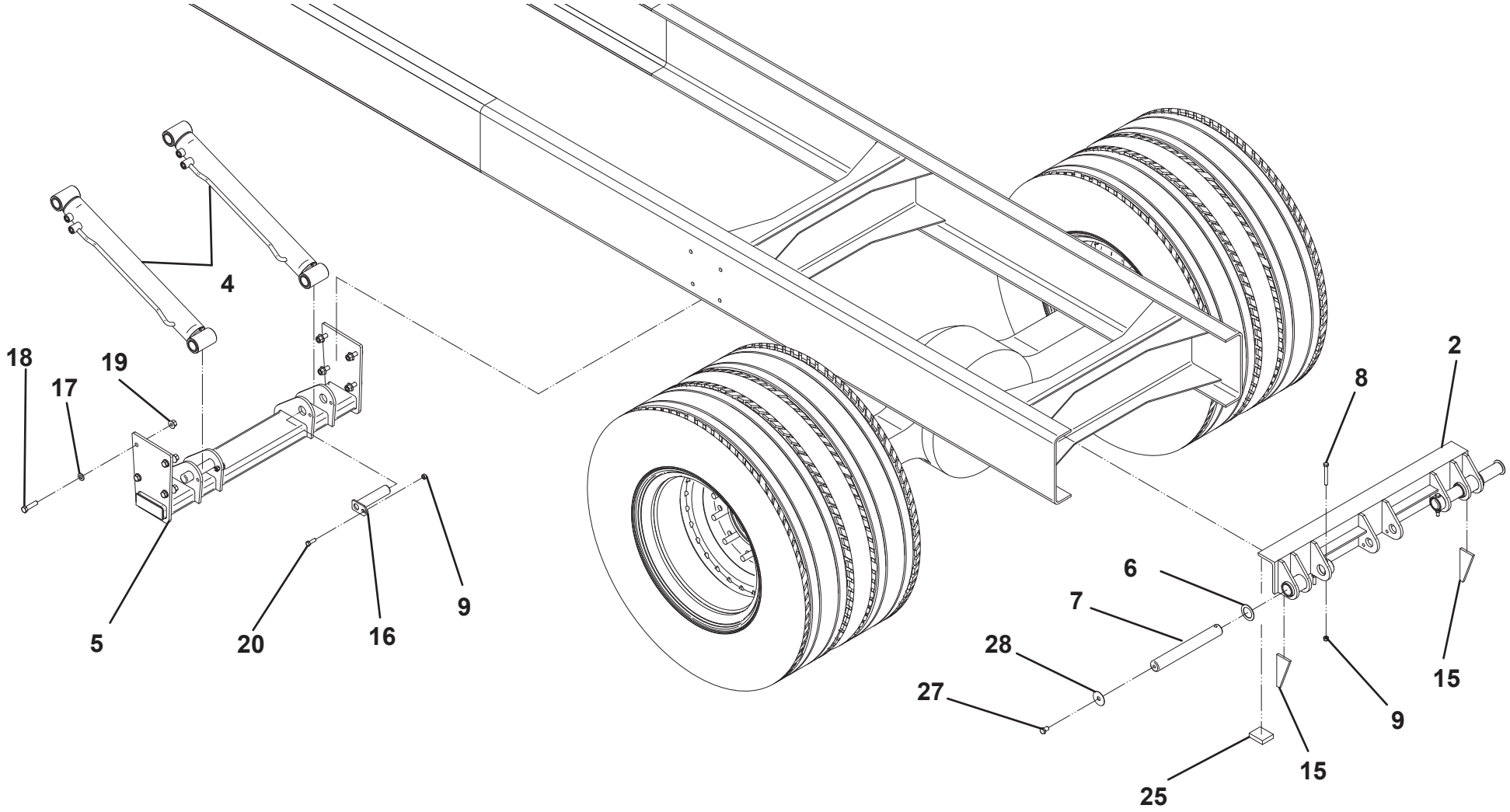

SUBFRAME (INBOARD TILT CYLINDERS)

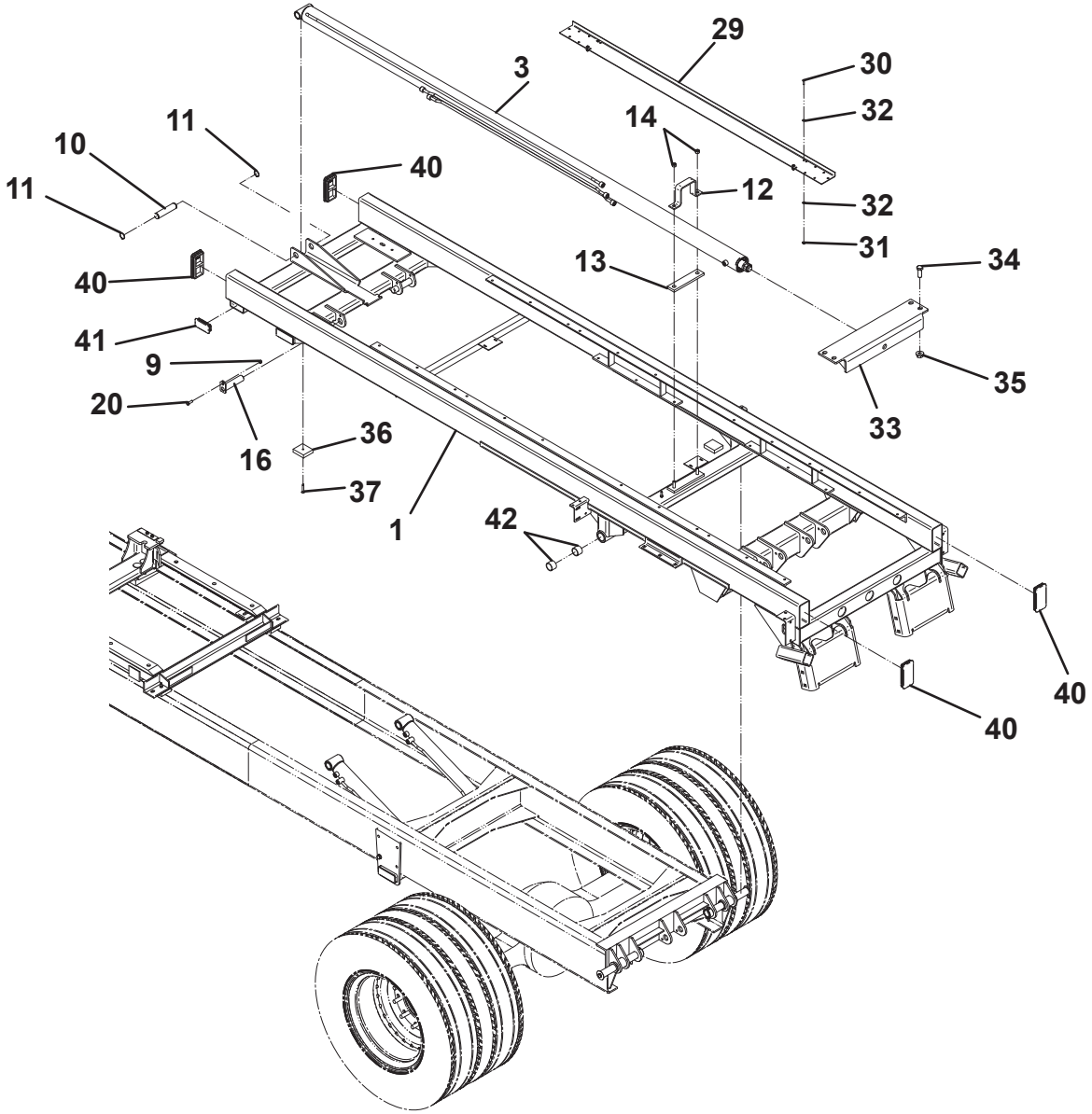

SUBFRAME (INBOARD TILT CYLINDERS)

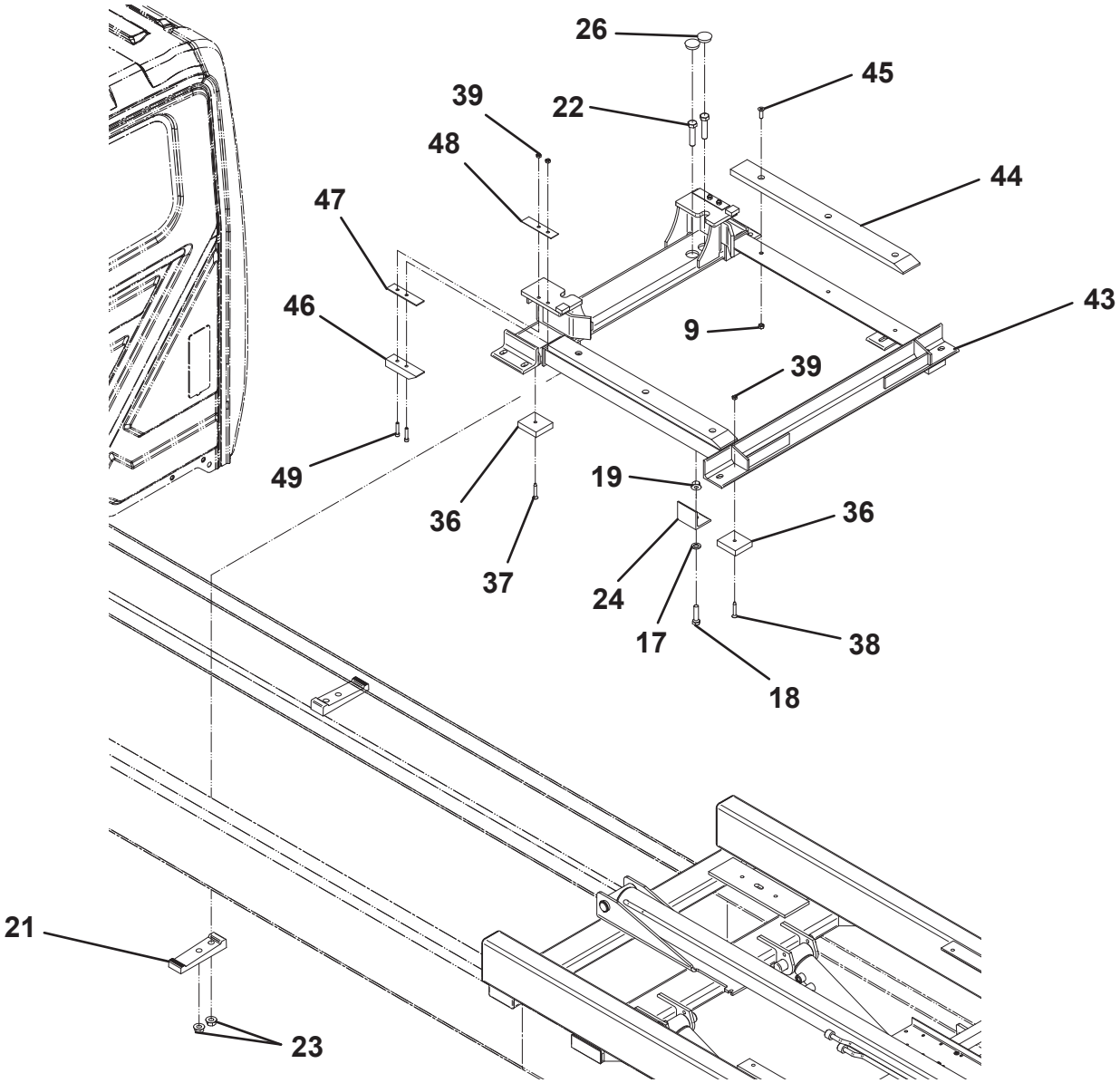

SUBFRAME (HIGH DUMP TILT CYLINDERS)

ITEM	PART NO.	DESCRIPTION	QTY
1	1001135123	Subframe - Standard	1
2	3905000012	Trunnion Weld	1
3	3320000236	Cylinder	1
4	3320000154	Cylinder	2
5	1001135157	Saddle Plate - LH Side	1
6	7949000008	Washer, 2.25" OD x 1.52" ID	2
7	4691000573	Pin	2
8	7115162450	Capscrew, 0.38”-16NC x 3.00"	2
9	7660162601	Locknut, 0.38”-16NC	12
10	4691000429	Pin	1
11	7754000006	Retaining Ring	2
12	4178000367	Bracket	1
13	4679000151	Wear Pad	1
14	7660182601	Locknut, 0.50”-13NC	2
15	4497000358	Gusset	2
16	3691000166	Pin	2
17	7105181650	Capscrew, 0.50”-20NF x 2.00"	10
18	7950180153	Flatwasher, 0.50" ID	10
19	7660182333	Locknut, 0.50”-20NF	10
20	7115161050	Capscrew, 0.38”-16NC x 1.25"	4
21	4209000337	Bushing	6
22	7274000046	Clamp	2
23	7105202250	Capscrew, 0.63”-18NF x 2.75"	4
24	7660202347	Locknut, 0.63”-18NF	12
25	4017001271	Angle	2
26	7701000063	Bar	4
27	3691000273	Pin	2
28	7115180650	Capscrew, 0.50”-13NC x 0.75"	2
29	7949000072	Washer, 2.00" OD x 0.50 ID	2
30	7950200242	Flatwasher, 0.63" ID	8
31	7105201850	Capscrew, 0.63”-18NF x 2.25"	8
32	4209000358	Bushing	4
33	3017000103	Roll Cylinder Angle	1
34	7115221650	Capscrew, 0.75"-10NC x 2.00"	4
35	7660222308	Locknut, 0.75”-10NC	4
36	1001135158	Saddle Plate - RH	1
37	4017001407	Angle	1
38	4705000507	Plate	10
39	4706005958	Plate	1

ITEM	PART NO.	DESCRIPTION	QTY
40	7114100818	Capscrew, #10 -24NC x 1.00"	4
41	7950100151	Flatwasher, 0.19" ID	8
42	7660102604	Locknut, #10 -24NC	4
43	7701000048	Plug	4
44	7701000051	Plug	8
45	7082000017	Bearing	4
46	3558000013	Hold Down Weldment	1
47	4679000153	Pad	2
48	7118161026	Capscrew, 0.38”-16NC x 1.25"	6
49	4679000221	Pad	2
50	4812000071	Shim	2
51	4812000072	Shim	2
52	7114151218	Capscrew, 0.31”-18NC x 1.50"	4
53	7660152601	Locknut, 0.31”-18NC	4

*included in Hold Down Weld, P/N 3558000014

SUBFRAME (HIGH DUMP TILT CYLINDERS)

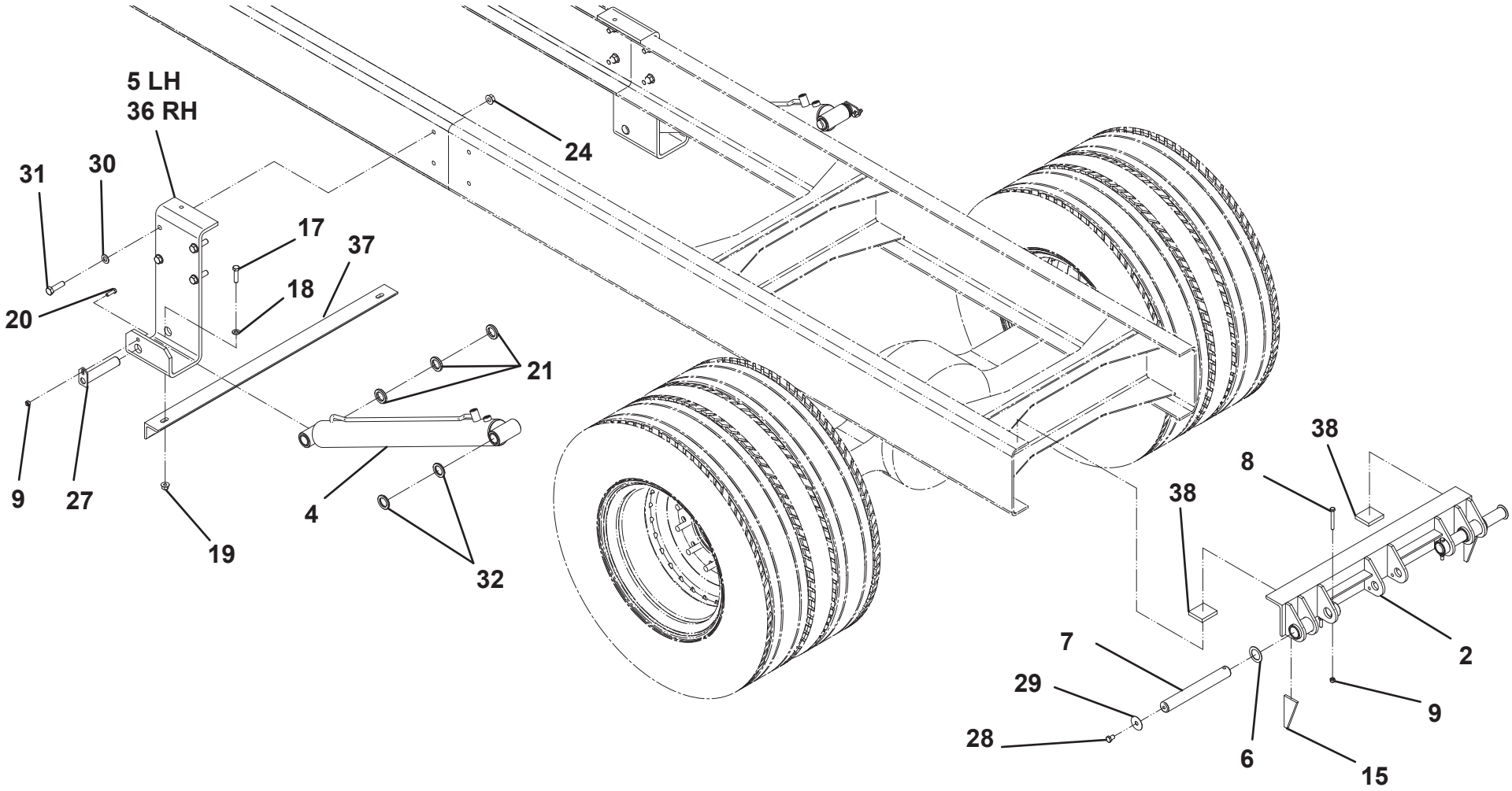

SUBFRAME (HIGH DUMP TILT CYLINDERS)

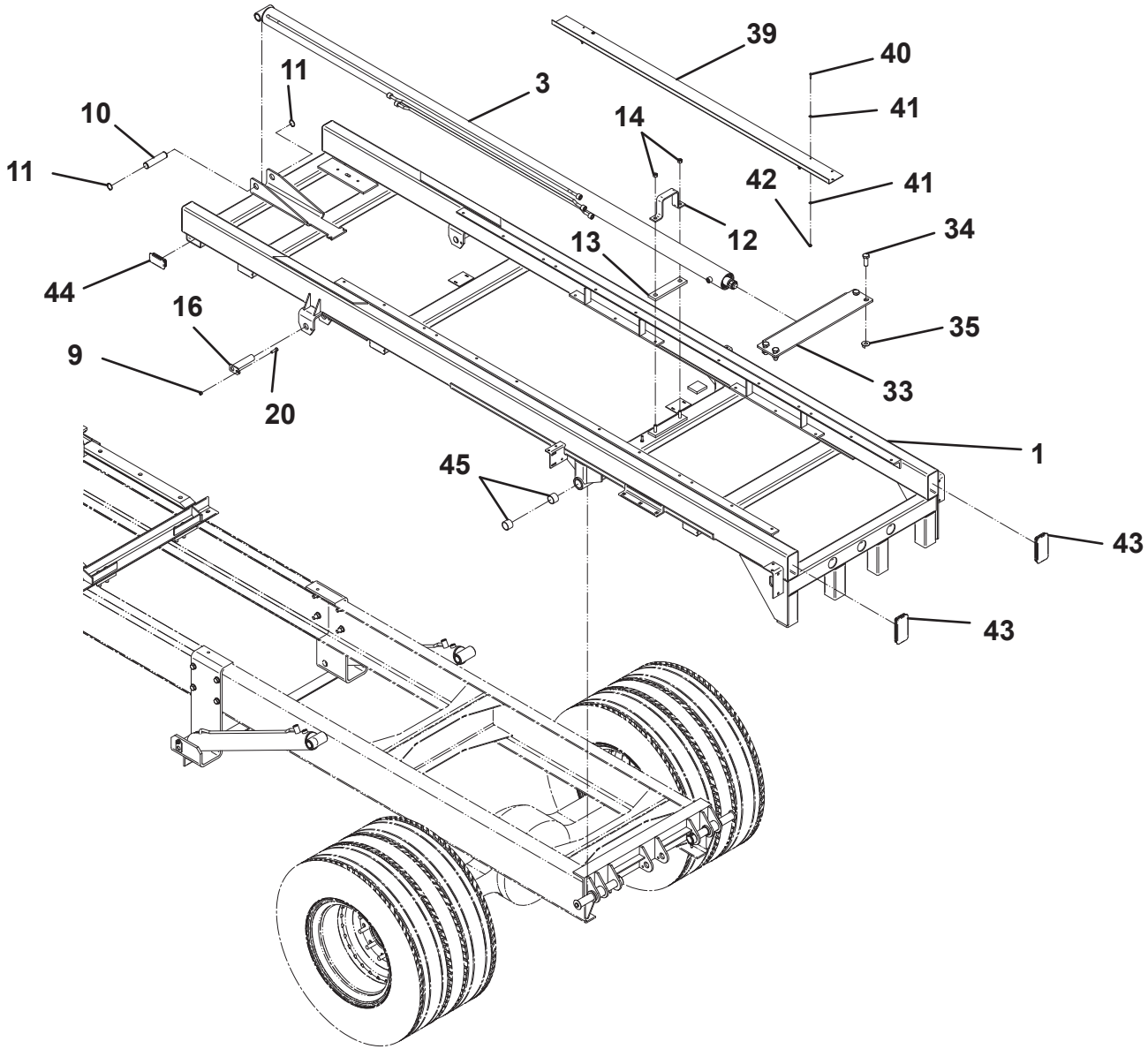

SUBFRAME (HIGH DUMP TILT CYLINDERS)

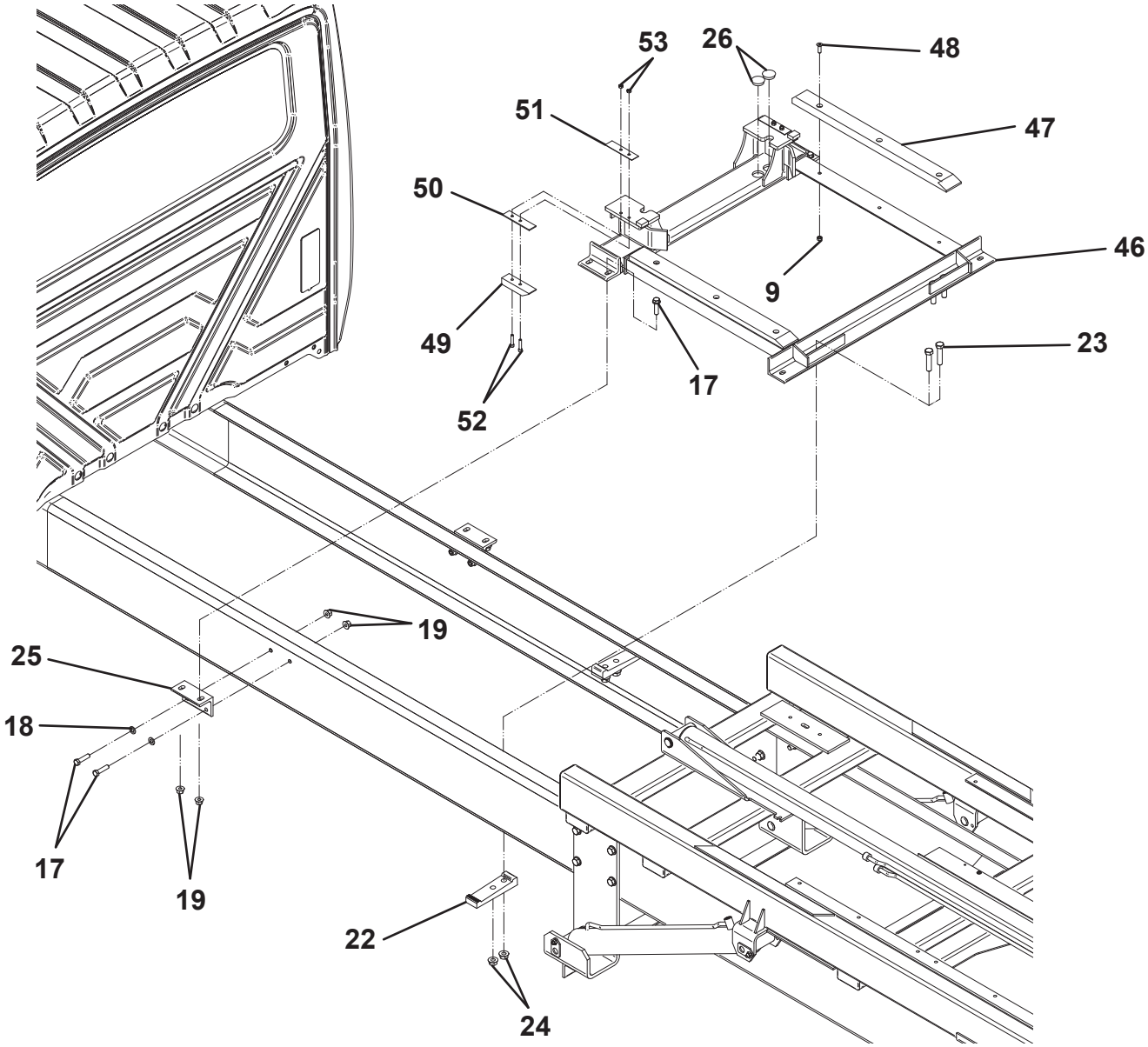

SLIDE PADS

ITEM	PART NO.	DESCRIPTION	QTY
1	4679000145*^	Wear Pad	12
2	4679000154^	Wear Pad (20’ & 21” decks only)	2
3	7118161026*	Screw, 0.38”-16NC x 1.25” (19’ decks)	36
	7118161026^	Screw, 0.38”-16NC x 1.25” (20’ & 21” decks)	40
4	7660162601*	Locknut, 0.38”-16NC (19’ decks)	36
	7660162601^	Locknut, 0.38”-16NC (20’ & 21’ decks)	40

*included in Wear Pad Kit P/N 9577000226 for 19’ decks
^included in Wear Pad Kit P/N 9577000227 for 20’ & 21’ decks

SLIDE PADS

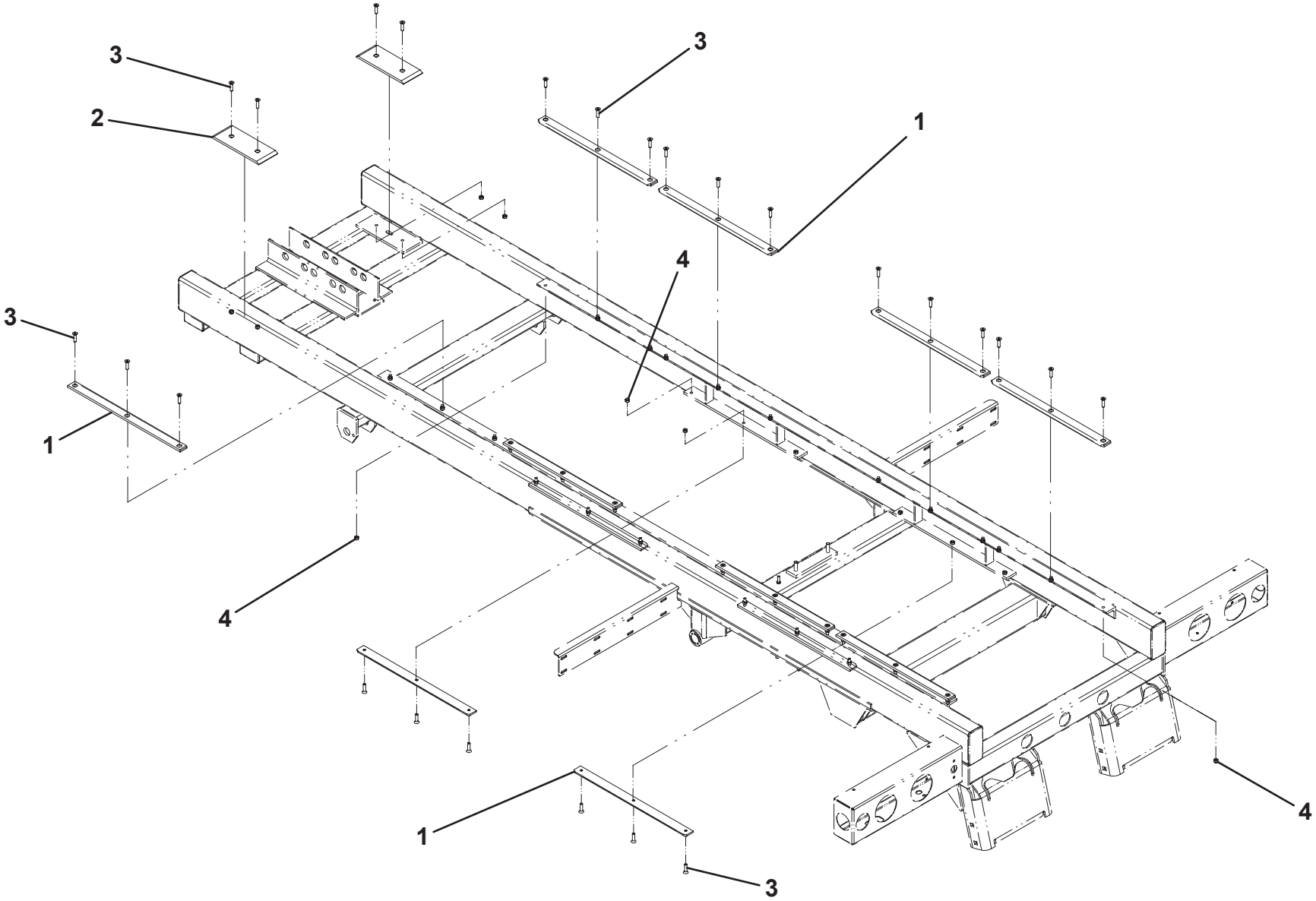

MUD FLAPS

ITEM	PART NO.	DESCRIPTION	QTY
1	7638000004	Mud Flap - Standard, 30” long	2
	7638000013	Mud Flap - High Frame, 36” long	
2	4706000233	Plate - Standard	2
	4706004383	Plate - Galvanized	
3	7111150864	Carriage Bolt, 0.31”-18NC x 1.00”	8
4	7660152601	Locknut, 0.31”-18NC	8

MUD FLAPS

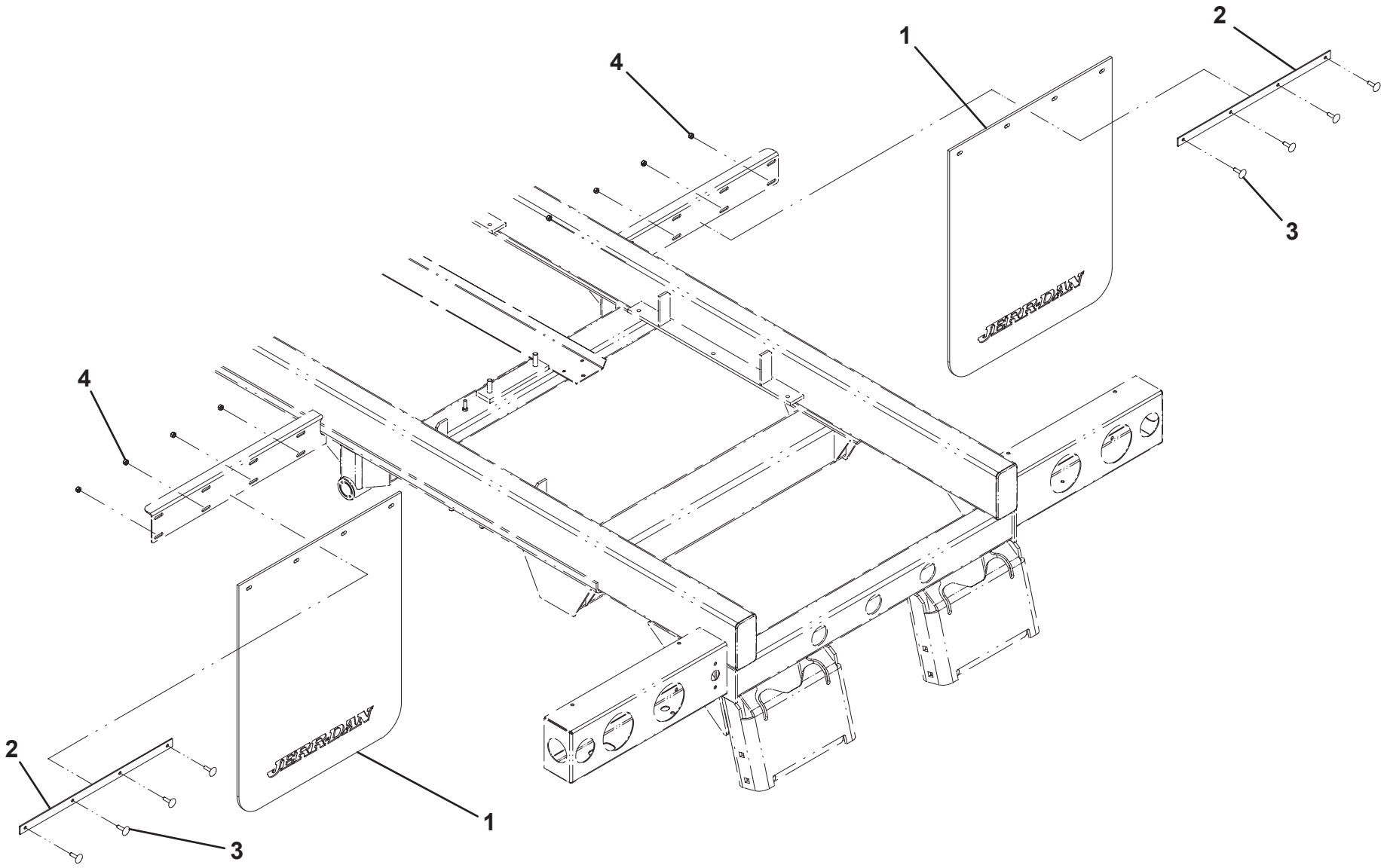

MUD FLAPS - FORD F550 & DODGE RAM 5500

ITEM	PART NO.	DESCRIPTION	QTY
1	7638000004*	Mud Flap - Standard, 30’ long	2
	7638000013*	Mud Flap - High Frame, 36” long	
2	4017001550*	Mount Angle	1
3	4706000233*	Plate	2
4	7178000044*	Anti-Sail Bracket	2
5	4017001587*	Angle	2
6	7115151050*	Capscrew, 0.31”-18NC x 1.25” (Ford)	4
	7115151250*	Capscrew, 0.31”-18NC x 1.50” (Dodge)	
7	7950150161*	Flatwasher, 0.31” ID	12
8	7660152601*	Locknut, 0.31”-18NC	12
9	7115151264*	Carriage Bolt, 0.31”-18NC x 1.50”	4
10	7111150864*	Carriage Bolt, 0.31”-18NC x 1.00”	4

ITEM	PART NO.	DESCRIPTION	QTY
		F550 > 2012	
1	1001147117	Angle	1
2	7115151264	Carriage Bolt, 0.31”-18NC x 1.50"	8
3	7950150161	Flatwasher, 0.31" ID	16
4	7660152601	Locknut, 0.31”-18NC	8
5	4891800	Washer, 0.50" ID	6
6	7638000004	Mud Flap - Standard 30" long	2
7	4706000233	Plate	2

*2008 and later F550 with diesel engine

MUD FLAPS - FORD F550 & DODGE RAM 5500

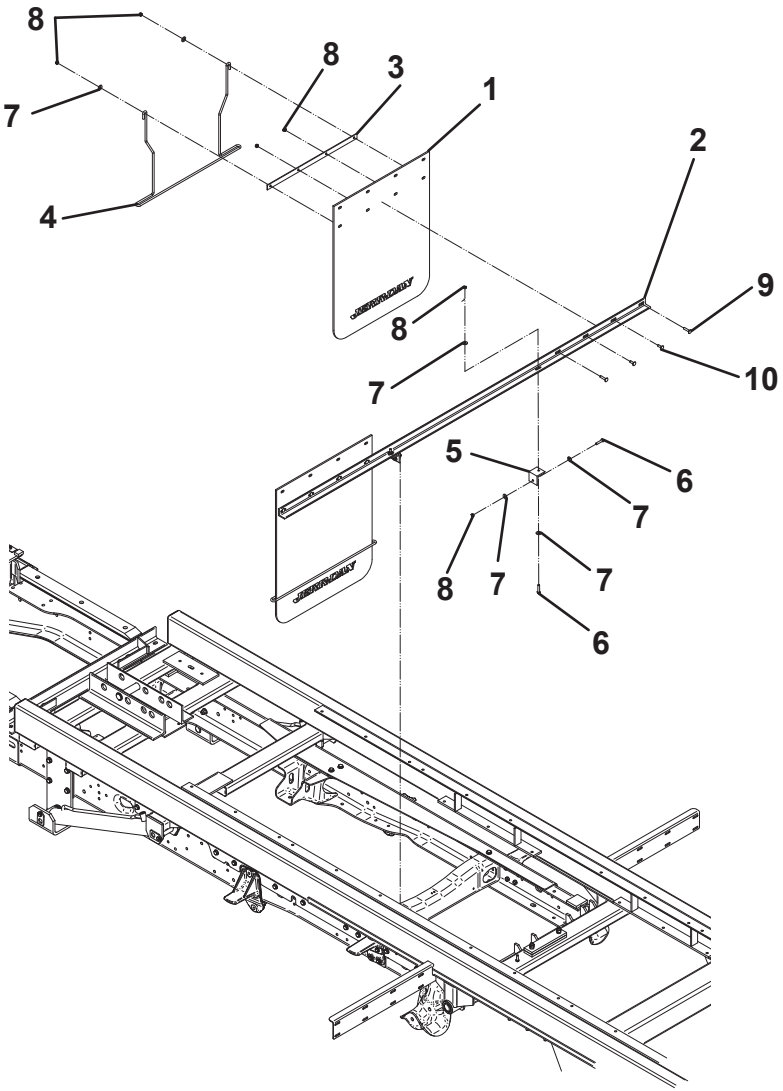

F550 < 2011 & D5500

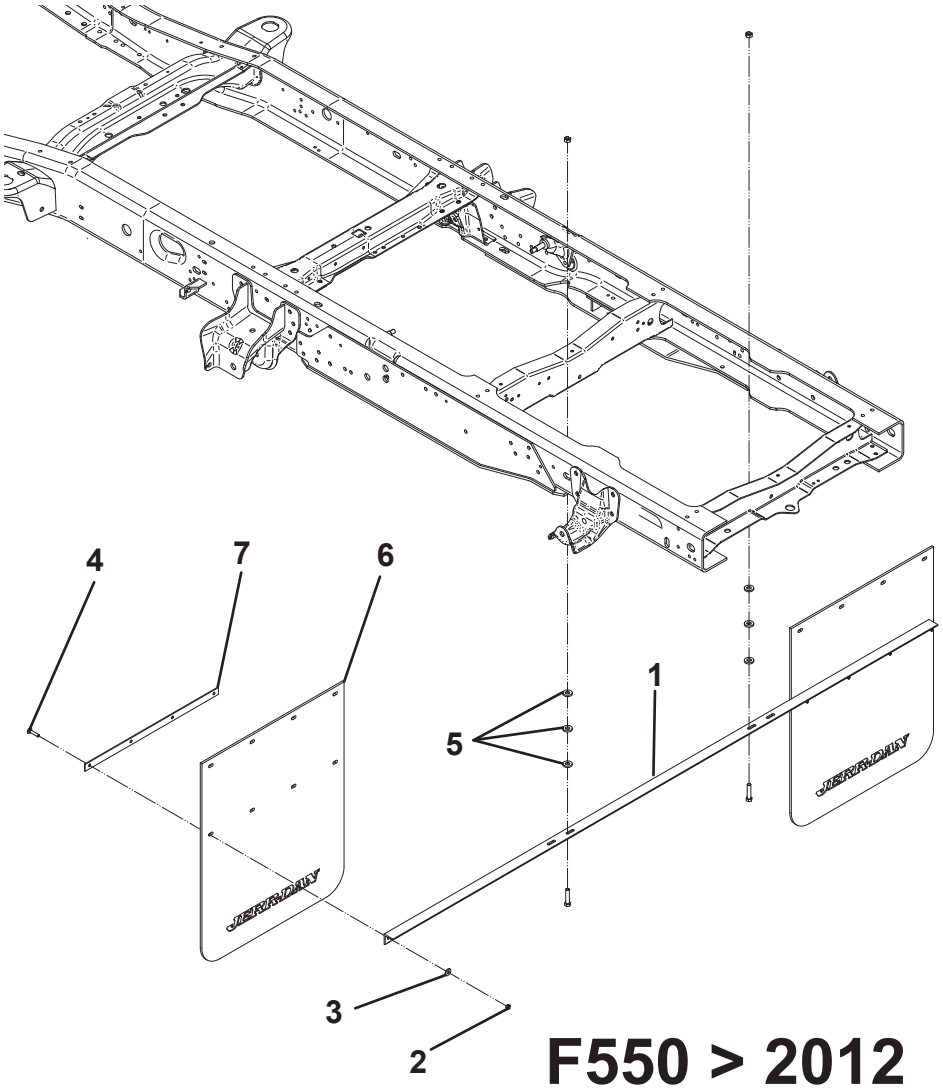

F550 > 2012

FINAL ASSEMBLY

ITEM	PART NO.	DESCRIPTION	QTY
1	3190000037	Bumper Tube Weld - Short - Standard	2
	3190000050	Bumper Tube Weld - Short - Galvanized	
	3190000034	Bumper Tube Weld - Long - Standard	
	3190000049	Bumper Tube Weld - Long - Galvanized	
2	7115181064	Carriage Bolt, 0.50”-13NC x 1.25”	8
3	7660182601	Locknut, 0.50”-13NC	8
4	4314000235	Light Box Cover - RH	1
5	7661000042	U-Nut, 0.25”-20NC	8
6	7949000023	Nylon Washer, 0.26” ID	18
7	7114140529	Screw, 0.25”-20NC x 0.63”	8
8	7493000002	Grommet	4
9	7590000113	Back-Up Light - White (Std.)	2
10	7590000341	Stop/Tail/Turn Light - Red (LED)	2
11	7493000009	Grommet	4
12	7590000343	Marker Light - Red (LED)	4
13	7493000023	Grommet	3
14	7590000340	Marker Light - Red (LED)	3
15	7493000010	Grommet	1
16	7590000251	License Plate Light	1
17	7011000007	Back-Up Alarm	1
18	7114140528	Screw, 0.25”-20NC x 0.63”	2
19	7660142601	Locknut, 0.25”-20NC	2
20	7701000049	Plug	1
21	7701000055	Plug	2
22	Not Required		
23	7330000428	Reflective Tape	2
24	4314000200	Cover Plate - Standard	2
	4314000204	Cover Plate - Galvanized	
25	7679000020	Non-Skid Pad	2
26	7115140850	Screw, 0.25”-20NC x 1.00”	8
27	7950140000	Lockwasher, 0.25” ID	8
28	7661000064	U-Nut Clip, 0.25”-20NC	8
29	4314000232	Light Box Cover - LH	1

FINAL ASSEMBLY

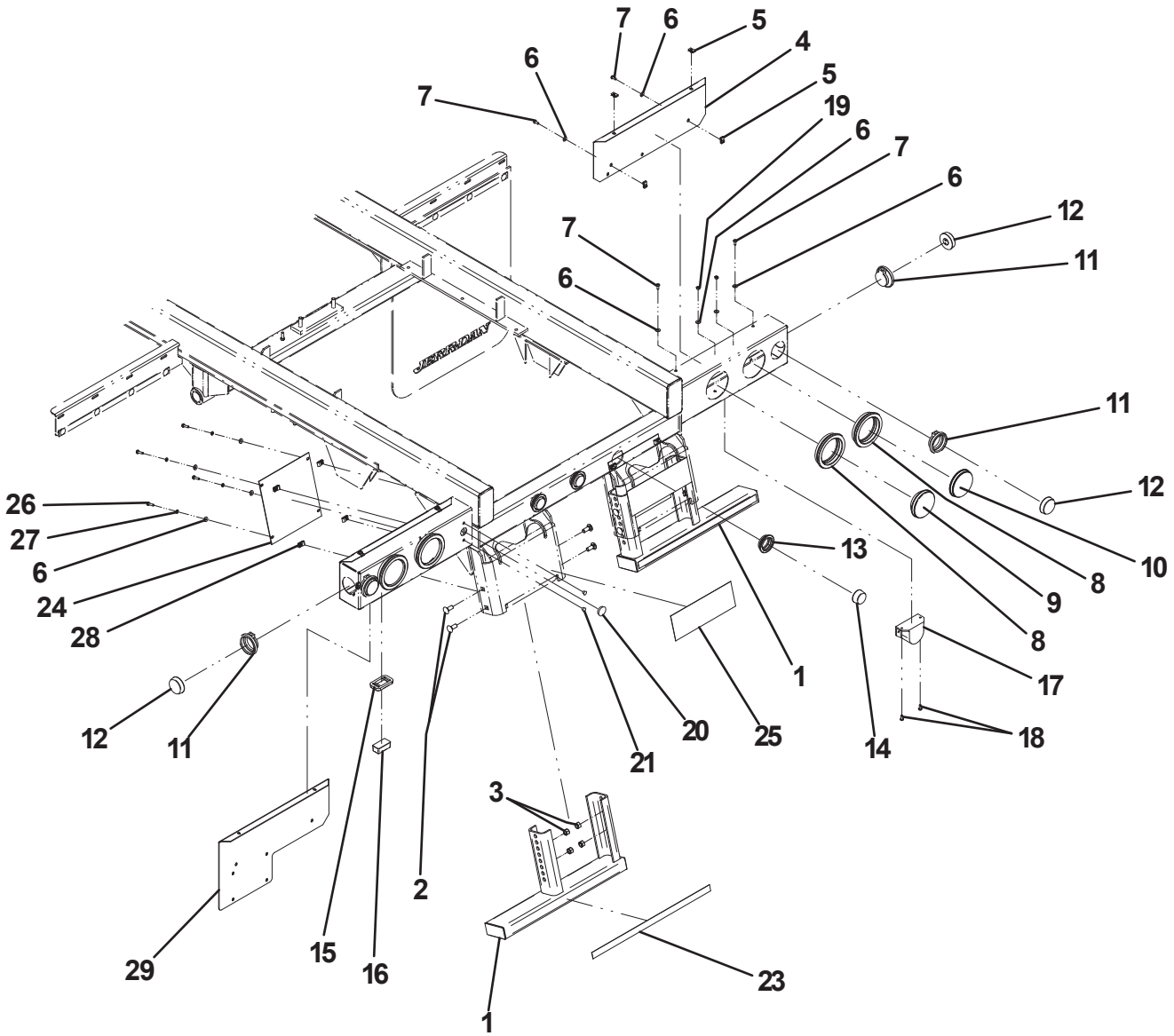

FINAL ASSEMBLY

ITEM	PART NO.	DESCRIPTION	QTY
1	4017001566	Angle - LH - Galvanized	1
	4017001742	Angle - LH - Black	1
2	4017001567	Angle - RH - Galvanized	1
	4017001743	Angle - RH - Black	1
3	7114150818	Capscrew, 0.31”-18NC x 1.00”	14
4	7950150153	Flatwasher, 0.31” ID	14
5	7660152601	Locknut, 0.31”-18NC	14
6	1001173947	Lightbox - LH - Galvanized	1
	1001173945	Lightbox - LH - Black	1
7	1001173946	Lightbox - RH - Galvanized	1
	1001173944	Lightbox - RH - Black	1

FINAL ASSEMBLY

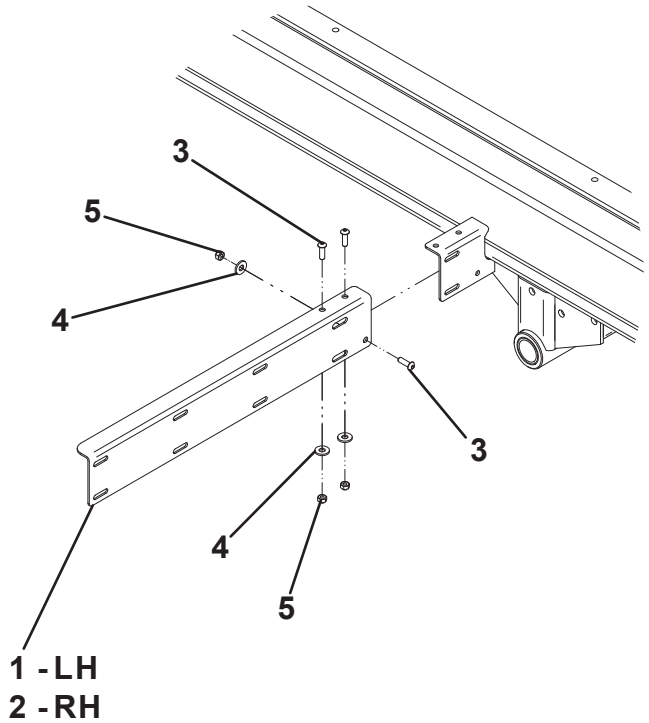

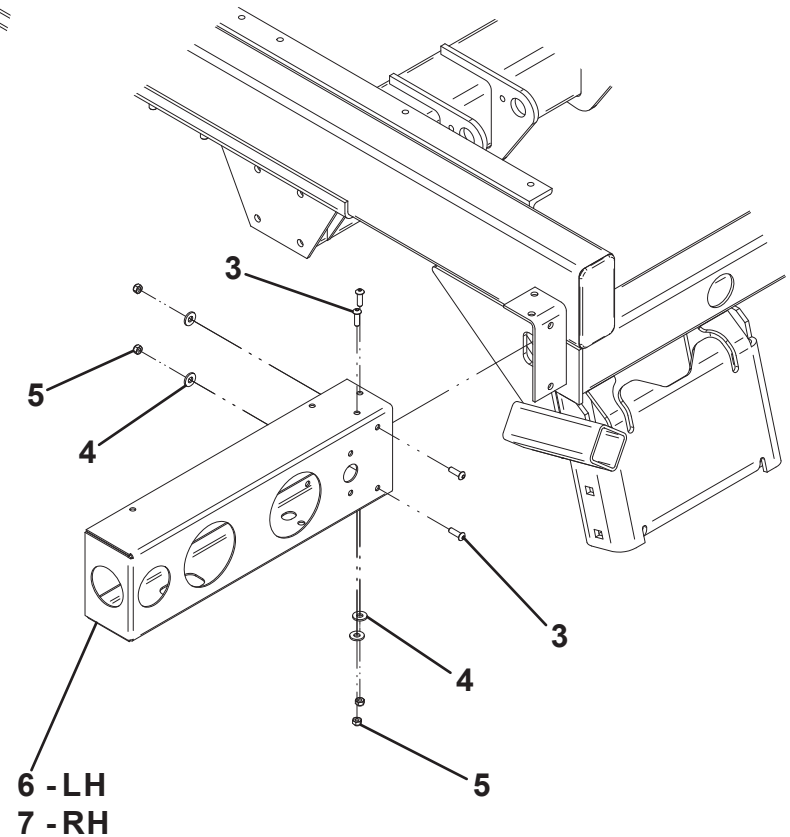

FORD F550 FRAME REINFORCEMENT AND SPRING SPACERS

ITEM	PART NO.	DESCRIPTION	QTY
1	3177000053	Brace Weld - LH	1
2	3177000054	Brace Weld - RH	1
3	7105201250	Capscrew, 0.63”-18NF x 1.75”	2
4	7660202347	Locknut, 0.63”-18NF	2
5	7105171450	Capscrew, 0.44”-20NF x 1.75”	18
6	7105171050	Capscrew, 0.44”-20NF x 1.25”	19
7	7660172331	Locknut, 0.44”-20NF	37
8	7950170142	Flatwasher, 0.44” ID	21
9	7274000076	Clamp	1
10	7115151050	Capscrew, 0.31”-18NC x 1.25”	1
11	7950150161	Flatwasher, 0.31” ID	1
12	7660152601	Locknut, 0.31”-18NC	2
13	7785152420	Set Screw, 0.31”-18NC x 1.50”	1
14	7661000065	Nut, M10 x 1.5	2
15	7813000048	Spacer	2
16	7120000044	U-Bolt	4

FORD F550 FRAME REINFORCEMENT AND SPRING SPACERS

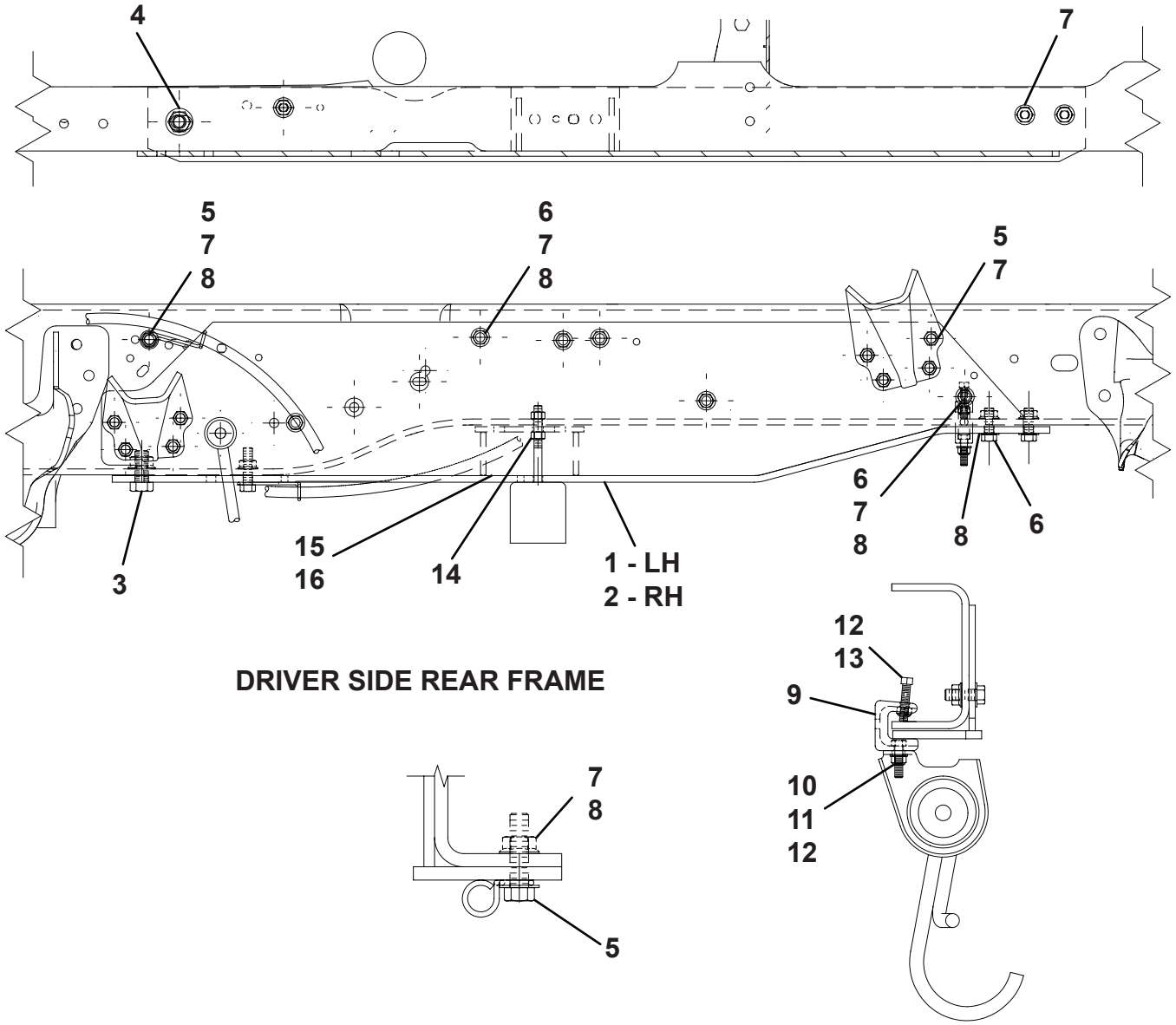

DRIVER SIDE REAR FRAME

FORD F550 SUBFRAME MODIFICATIONS

ITEM	PART NO.	DESCRIPTION	QTY
1	4062000281	Bar	2
2	4178000283	Bracket	1
3	7570000016	Fuel Filler Hose	1
4	7570000017	Fuel Vent Hose	1
5	7790161253	Screw, 0.38”-16NC x 0.75”	2
6	7277000001	Clevis	1
7	4809000003	Sheave	1
8	7690151601	Clevis Pin	1
9	7690021610	Cotter Pin	1
10	7105150850	Capscrew, 0.31”-24NF x 1.00”	1
11	7950150161	Flatwasher, 0.31” ID	3
12	4178000287	Bracket	1
13	7115151050	Capscrew, 0.31”-18NC x 1.25”	2
14	7660152601	Locknut, 0.31”-18NC	2

FORD F550 SUBFRAME MODIFICATIONS

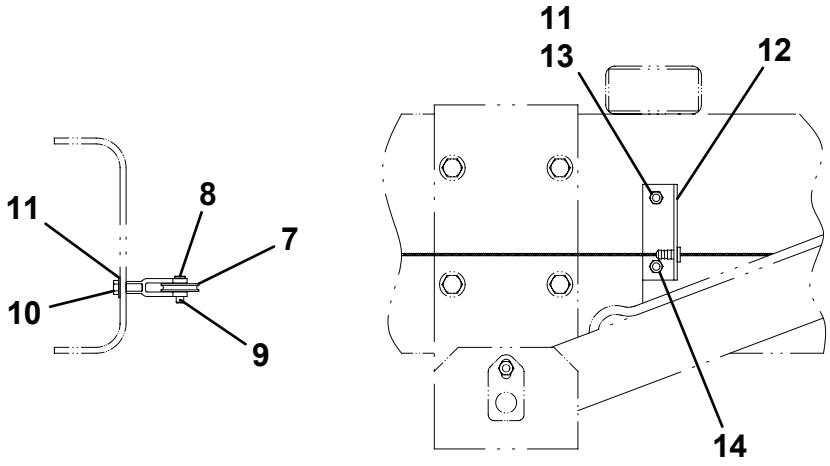

DRIVER'S SIDE

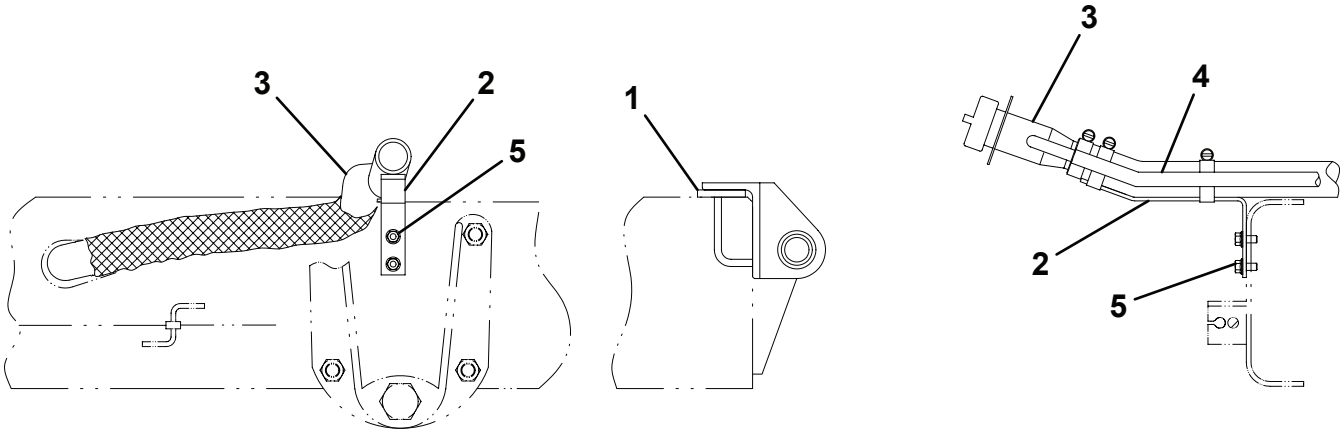

DRIVER'S SIDE

GMC C4500/5500 SUBFRAME MODIFICATIONS

ITEM	PART NO.	DESCRIPTION	QTY
1	4178000421	Bracket	1
2	7570000023	Fuel Filler Hose (2005 & earlier)	1
	7570000031	Fuel Filler Hose (2006 & later)	
3	7912000233	Fuel Fillneck (2006 & later diesel)	1
	7912000235	Fuel Fillneck (2006 & later gas)	
4	7570000017	Fuel Vent Hose (2006 & later diesel)	1
5	7254000021	Fill Cap (2006 & later gas only)	1
6	7790151253	Taptite Screw, 0.31”-18NC x 0.75”	2

GMC C4500/5500 SUBFRAME MODIFICATIONS

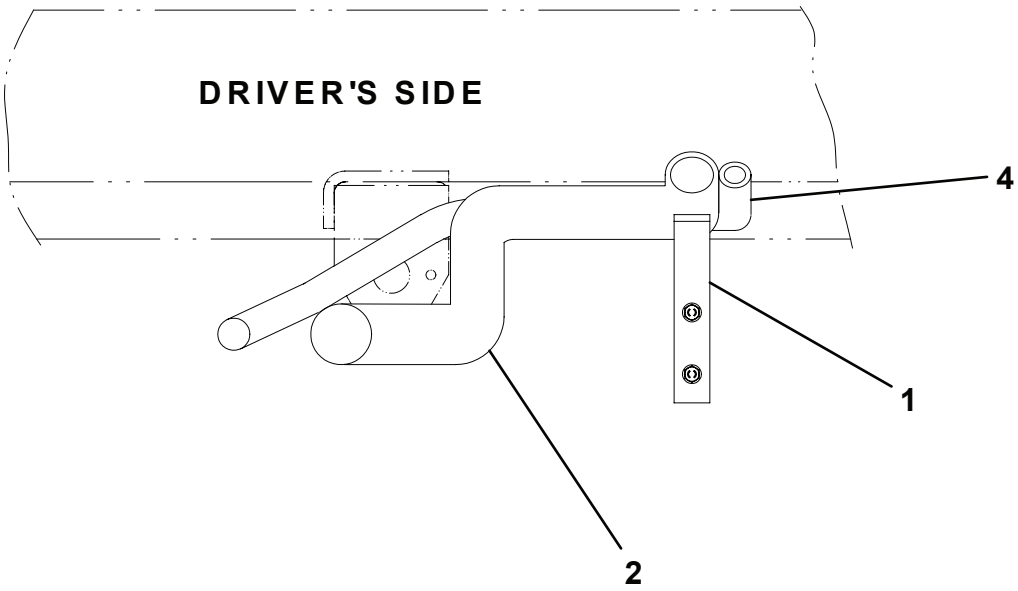

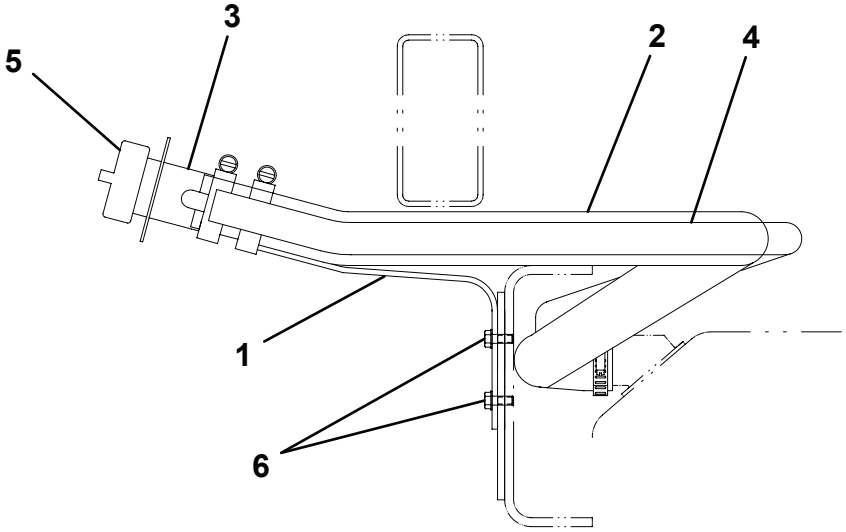

GMC C4500/5500 BRAKE CABLE REWORK & REAR FUEL TANK MOD

ITEM	PART NO.	DESCRIPTION	QTY
1	4178000421	Bracket	1
2	7570000025	Fuel Filler Hose (2005 & earlier)	1
3	7912000234	Fuel Fillneck (2006 & later diesel)	1
	7912000236	Fuel Fillneck (2006 & later gas)	
4	7105181650	Capscrew, 0.50”-20NF x 2.00”	2
5	7950180153	Flatwasher, 0.50” ID	2
6	7660182333	Locknut, 0.50”-20NF	2
7	4178000474	Bracket	1
8	4178000475	Bracket (2006 & earlier)	1
	4178000682	Bracket (2007 & later)	

GMC C4500/5500 BRAKE CABLE REWORK & REAR FUEL TANK MOD

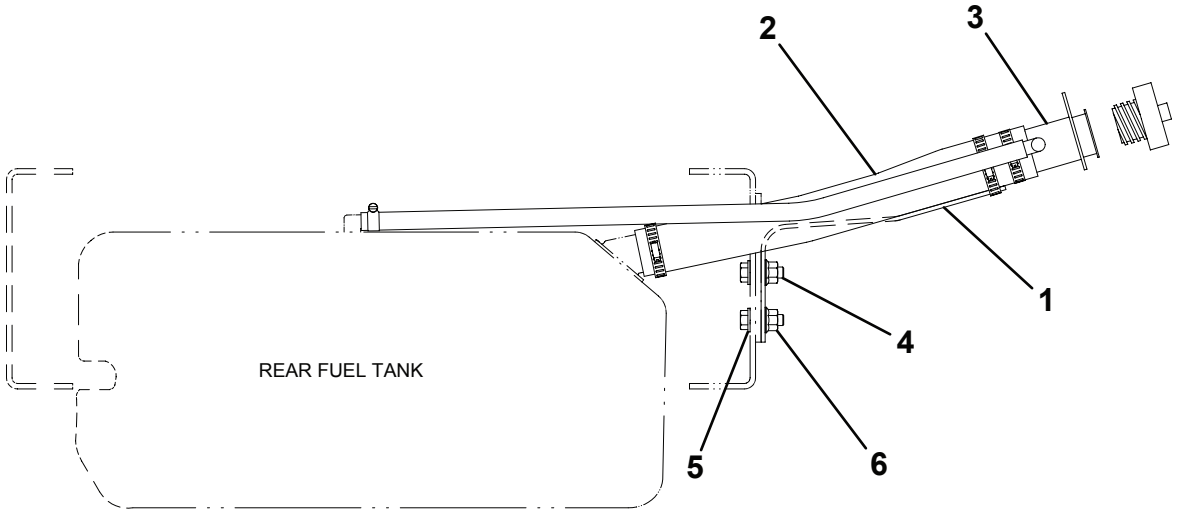

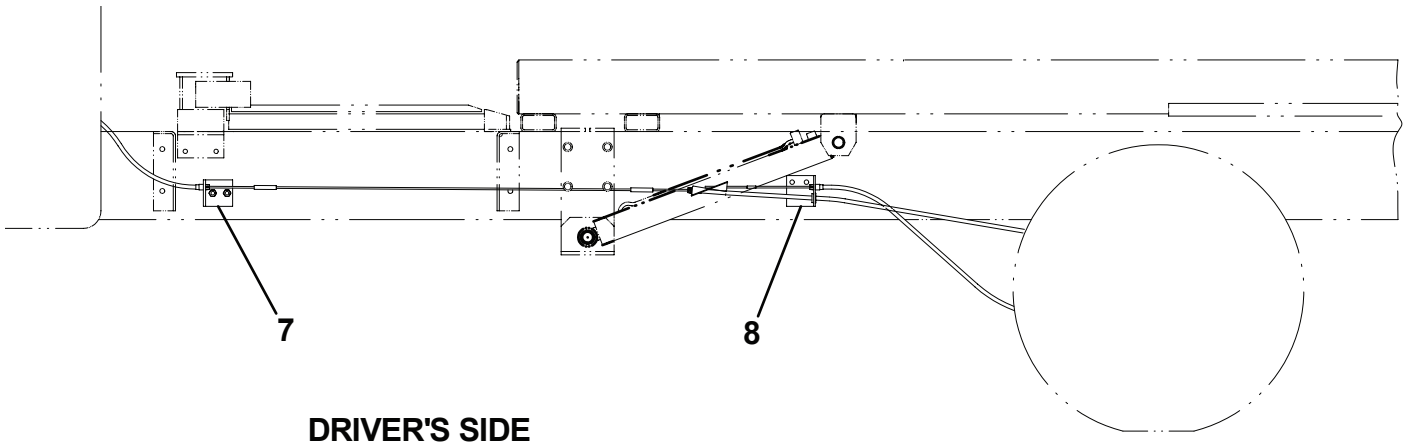

DRIVER'S SIDE

DODGE RAM 5500 FRAME REINFORCEMENT

ITEM	PART NO.	DESCRIPTION	QTY
1	7577000483	Frame Reinforcement Kit	1

DODGE RAM 5500 FRAME REINFORCEMENT

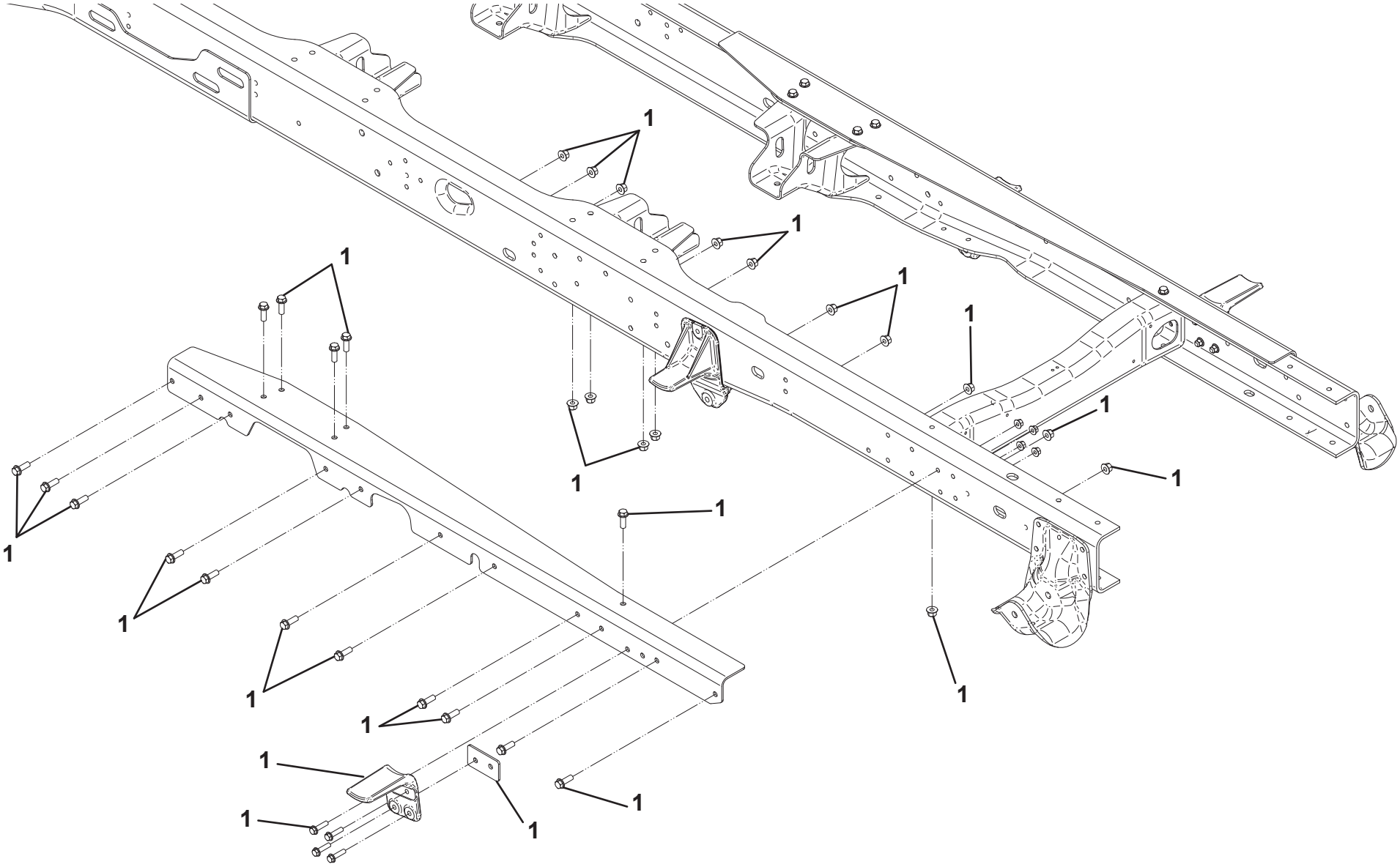

DODGE RAM 5500 FRAME REINFORCEMENT 2013 & NEWER

ITEM	PART NO.	DESCRIPTION	QTY
1	5251215	Bolt, 12MM x 35MM	32
2	1001164169	Nut, 12MM x 1.75	32
3	1001160363	Plate, LH	1
4	1001160362	Plate, RH	1
5	1001160365	Plate	2

DODGE RAM 5500 FRAME REINFORCEMENT 2013 & NEWER

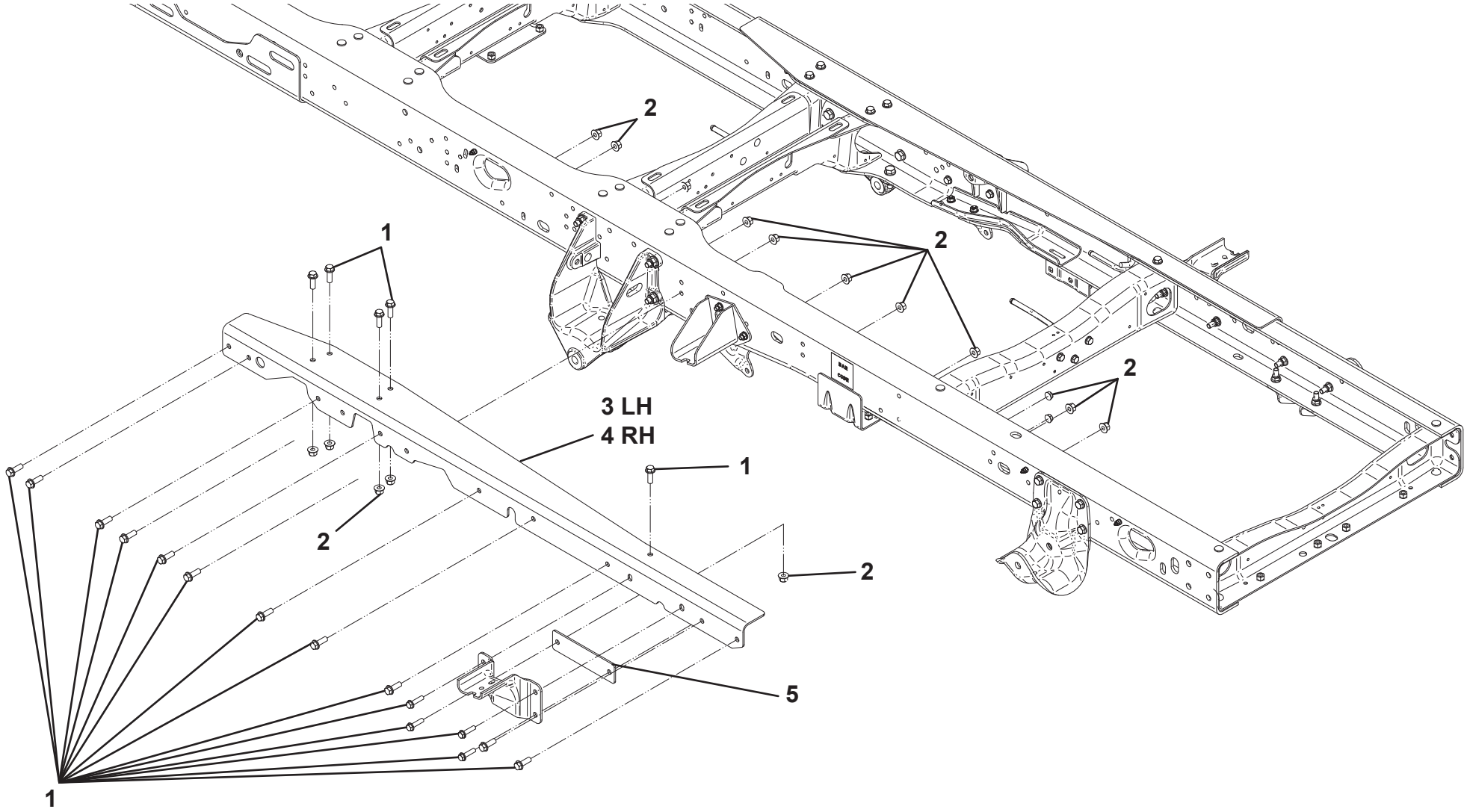

DODGE RAM 5500 BRAKE CABLE REWORK

ITEM	PART NO.	DESCRIPTION	QTY
1	4277000005	Adjustable Clevis	1
2	4809000003	Sheave	1
3	7690151601	Clevis Pin	1
4	7690021610	Cotter Pin	1
5	7105150850	Capscrew, 0.31”-24NF x 1.00”	1
6	7950150161	Flatwasher, 0.31” ID	2
7	4178000747	Bracket	1
8	7115181005	Capscrew, 0.50”-13NC x 1.25”	1
9	7660182601	Locknut, 0.50”-13NC	1

DODGE RAM 5500 BRAKE CABLE REWORK

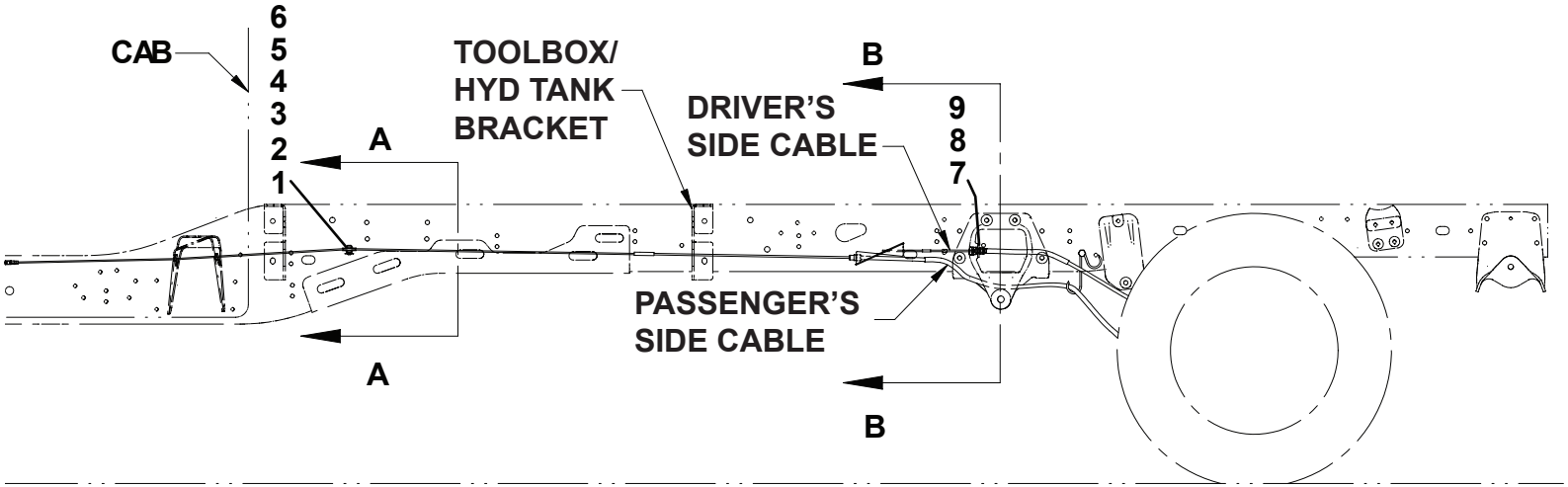

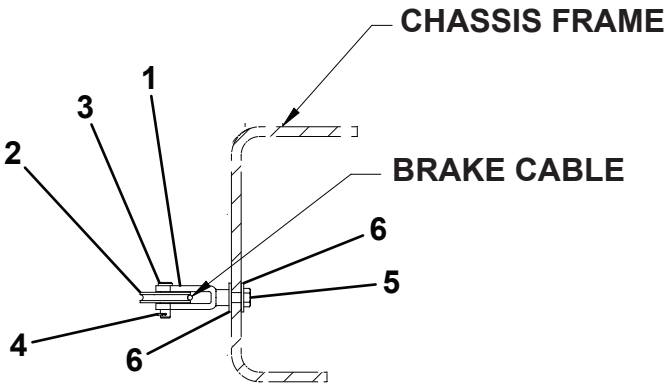

SECTION A-A

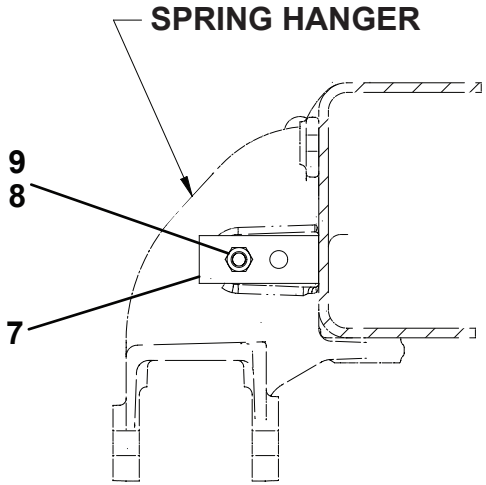

SECTION B-B

DODGE RAM 5500 FUEL TANK HOSE INSTALL

ITEM	PART NO.	DESCRIPTION	QTY
1	4178000421	Bracket	1
2	7570000016	Fuel Filler Hose (OEM fuel tank)	1
	7570000035	Fuel Filler Hose (TFI fuel tank)	
3	7570000017	Fuel Vent Hose	1
4	7890000041	Tank (Dodge 48 gal)	1

DODGE RAM 5500 FUEL TANK HOSE INSTALL

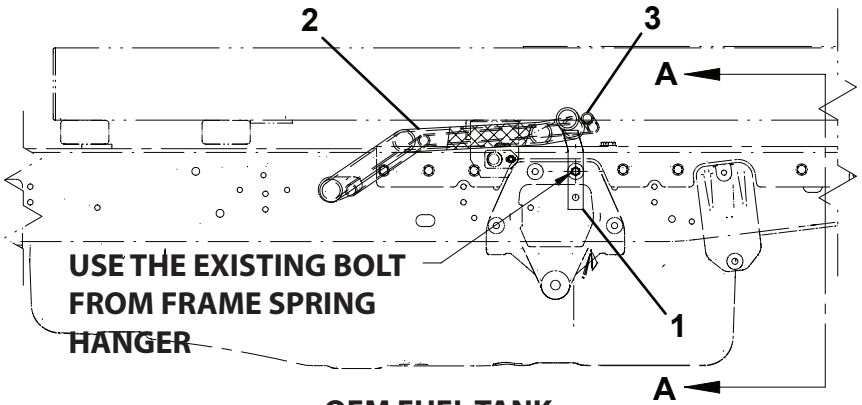

OEM FUEL TANK

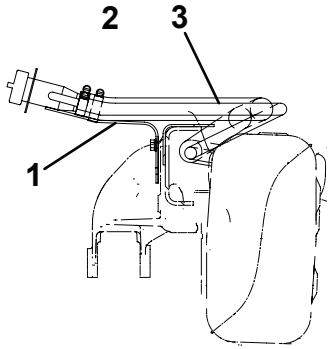

SECTION A-A

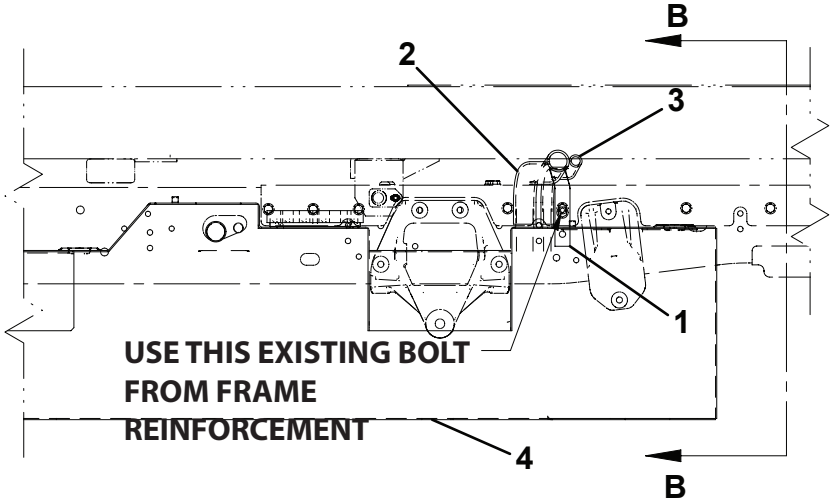

TFI AFTERMARKET TANK

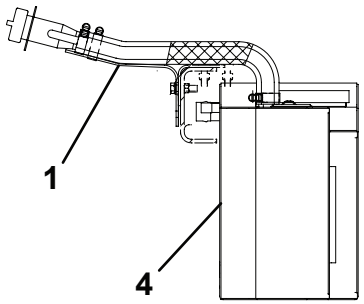

SECTION B -B

ISUZU NRR FRAME REINFORCEMENT -176” WB

ITEM	PART NO.	DESCRIPTION	QTY
1	1001155971	Plate, LH Side	1
2	1001155972	Plate, RH Side	1
3	7105171050	Capscrew, 0.44”-20NF x 1.25”	31
4	7950170142	Flatwasher, 0.44” ID	31
5	7660172331	Locknut, 0.44”-20NF	31
6	7105201650	Capscrew, 0.63”-18NF x 2.00”	18
7	7950200242	Flatwasher, 0.63” ID	18
8	7660202347	Locknut, 0.63”-18NF	18

*Also sold as a Kit P/N 1001156082

ISUZU NRR FRAME REINFORCEMENT -176” WB

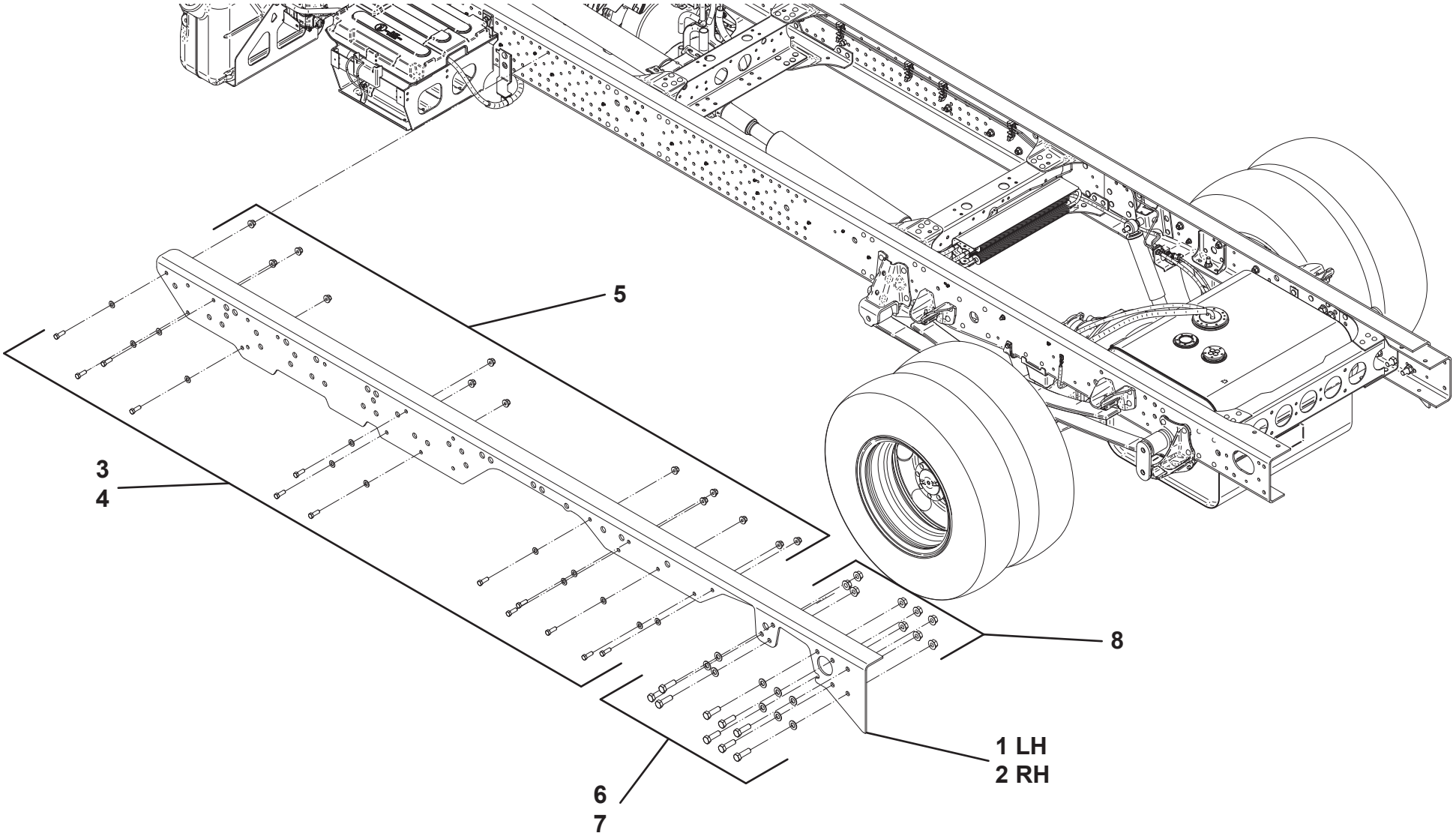

ISUZU NRR FRAME REINFORCEMENT -150” WB

ITEM	PART NO.	DESCRIPTION	QTY
1	1001155971	Plate	1
2	1001155972	Plate	1
3	7105171050	Capscrew, 0.44"-20NF x 1.25"	22
4	7950170142	Flatwasher, 0.44" ID	27
5	7660172331	Locknut, 0.44"-20NF	22
6	7105201650	Capscrew, 0.63"-18NF x 2.00"	18
7	7950200242	Flatwasher, 0.63" ID	18
8	7660202347	Locknut, 0.63"-18NF	18
9	761015	Bolt, M10 - 35 x 8.8	5
10	5261000	Nut, M10	5
11	1001132794	Clamp	1
12	4706003844	Plate	2
13	7115151064	Bolt, 0.31"-18NC x 1.25"	2
14	7950150161	Flatwasher, 0.31" ID	2
15	7660152601	Locknut, 0.31"-18NC	2
16	7274000105	Clamp	2
17	7274000040	Clamp	1
18	7894000004	Tie Strap	1

*Also sold as a Kit P/N 1001156081

ISUZU NRR FRAME REINFORCEMENT -150” WB

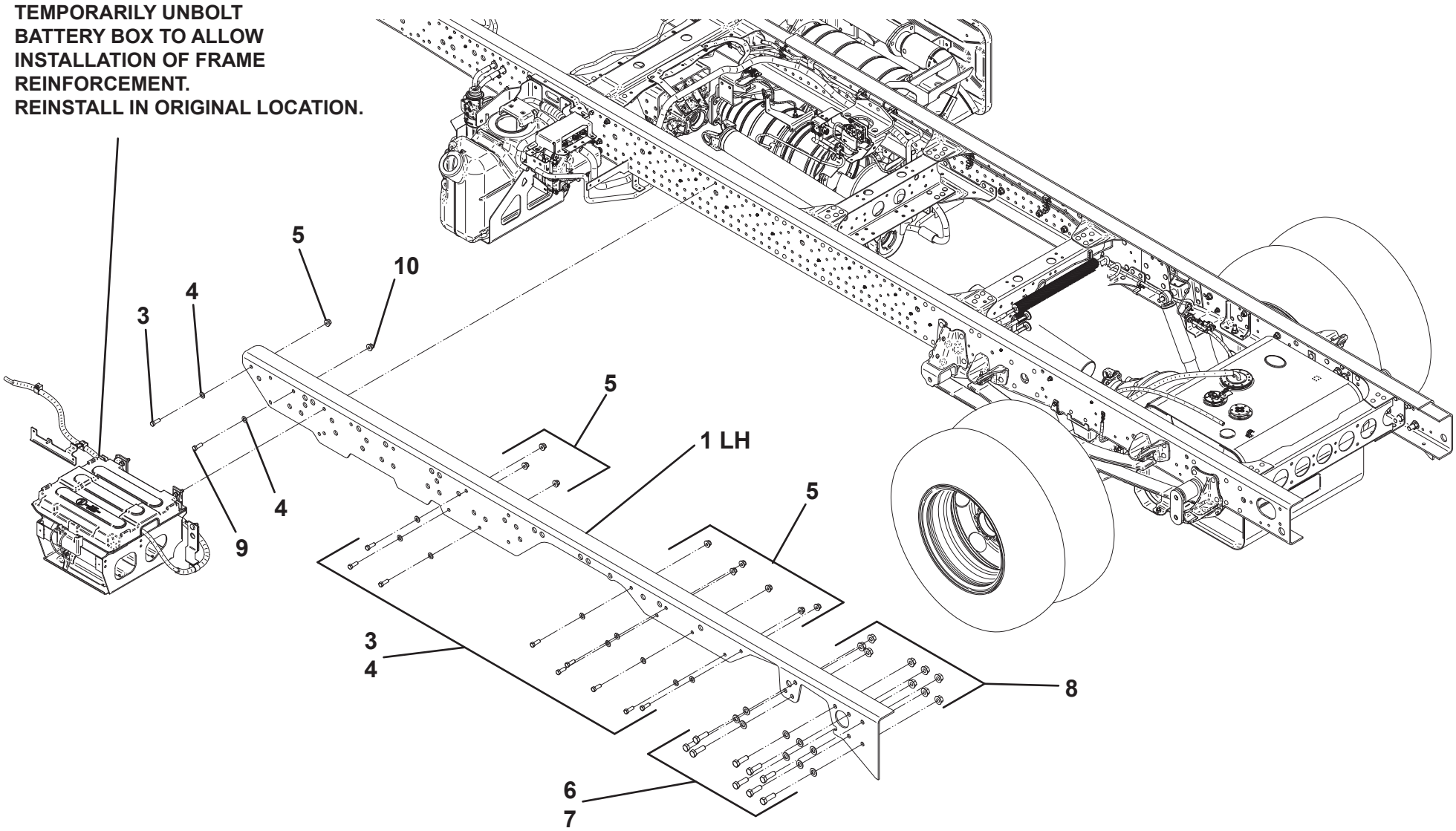

ISUZU NRR FRAME REINFORCEMENT -150” WB

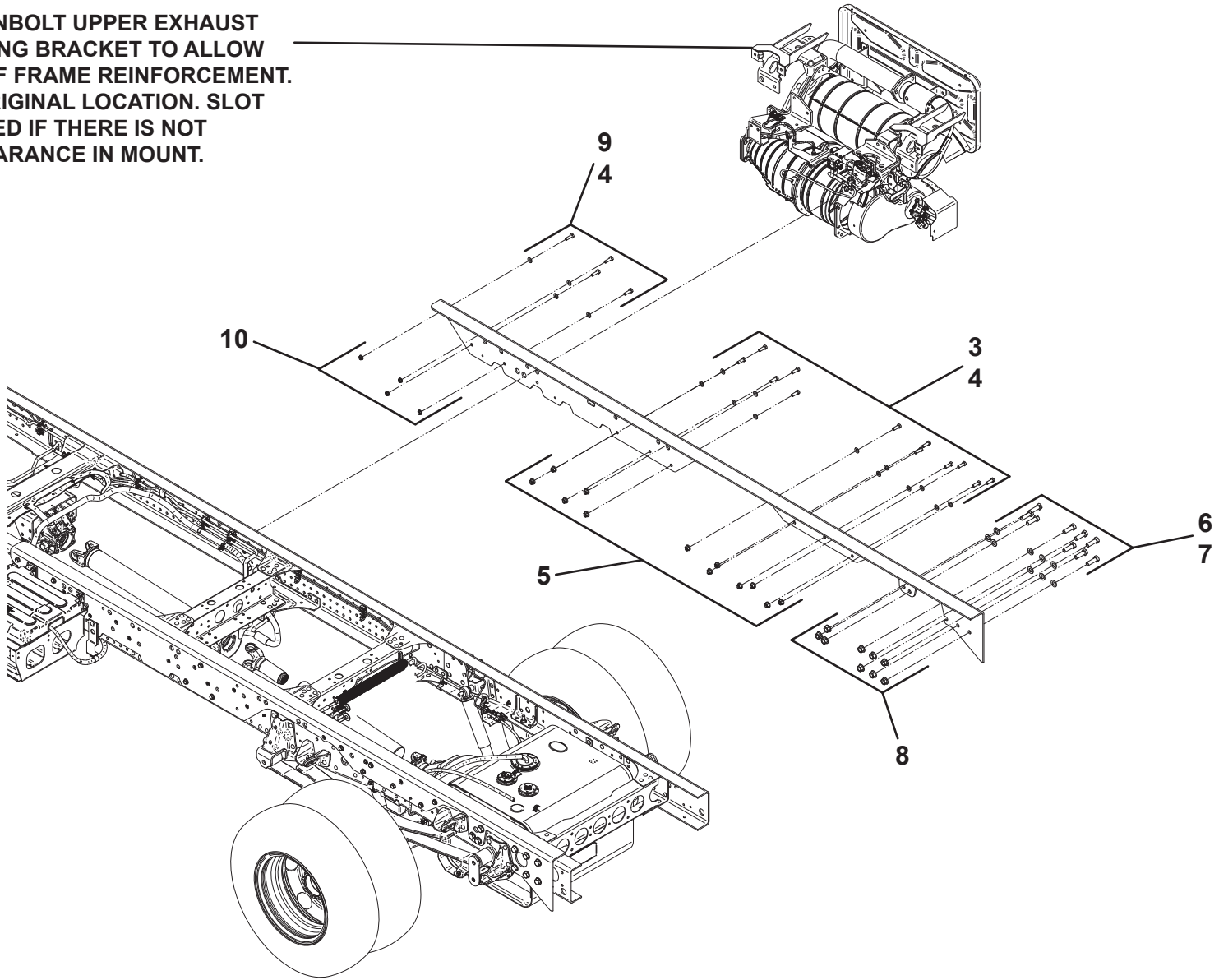

ISUZU NRR FRAME REINFORCEMENT -150” WB

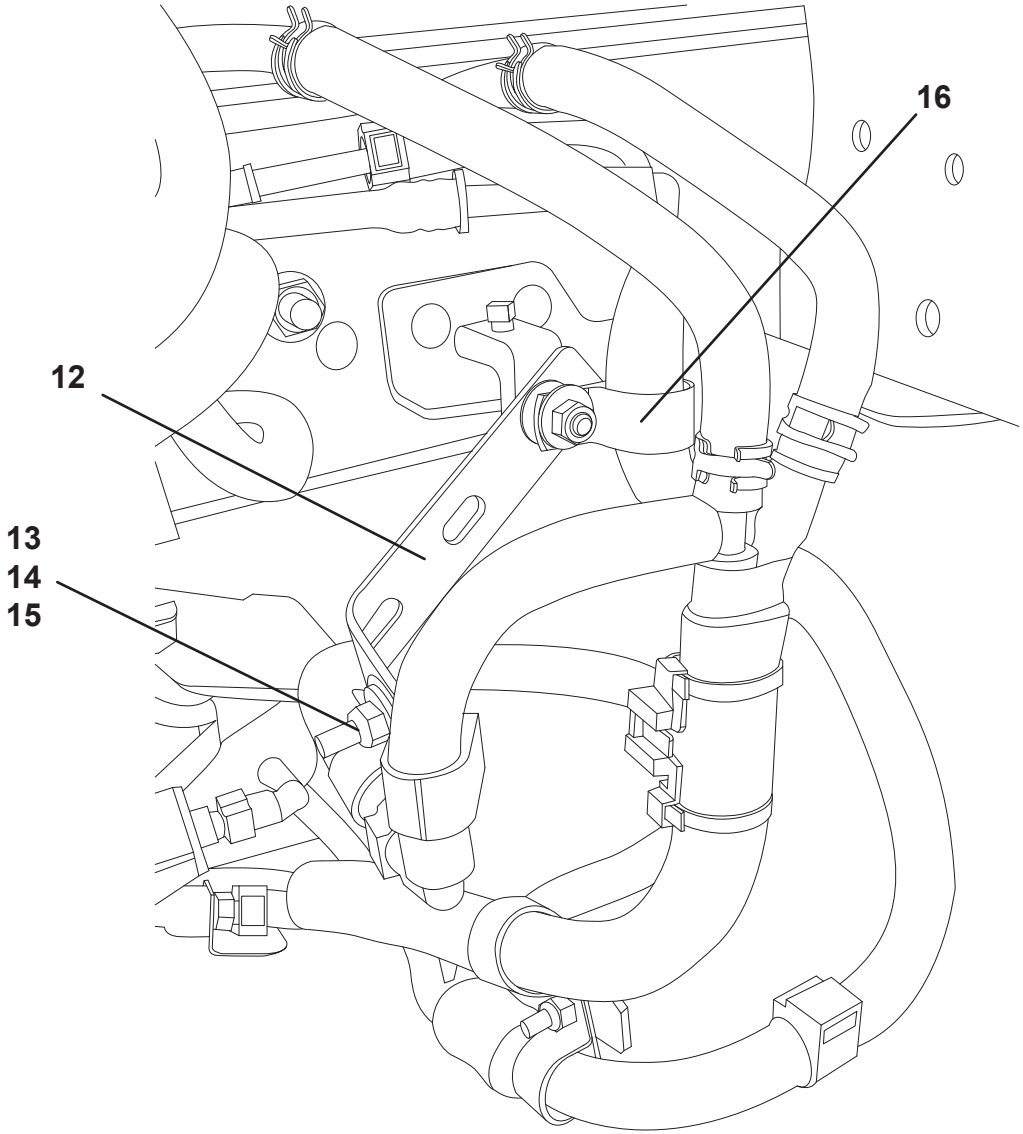

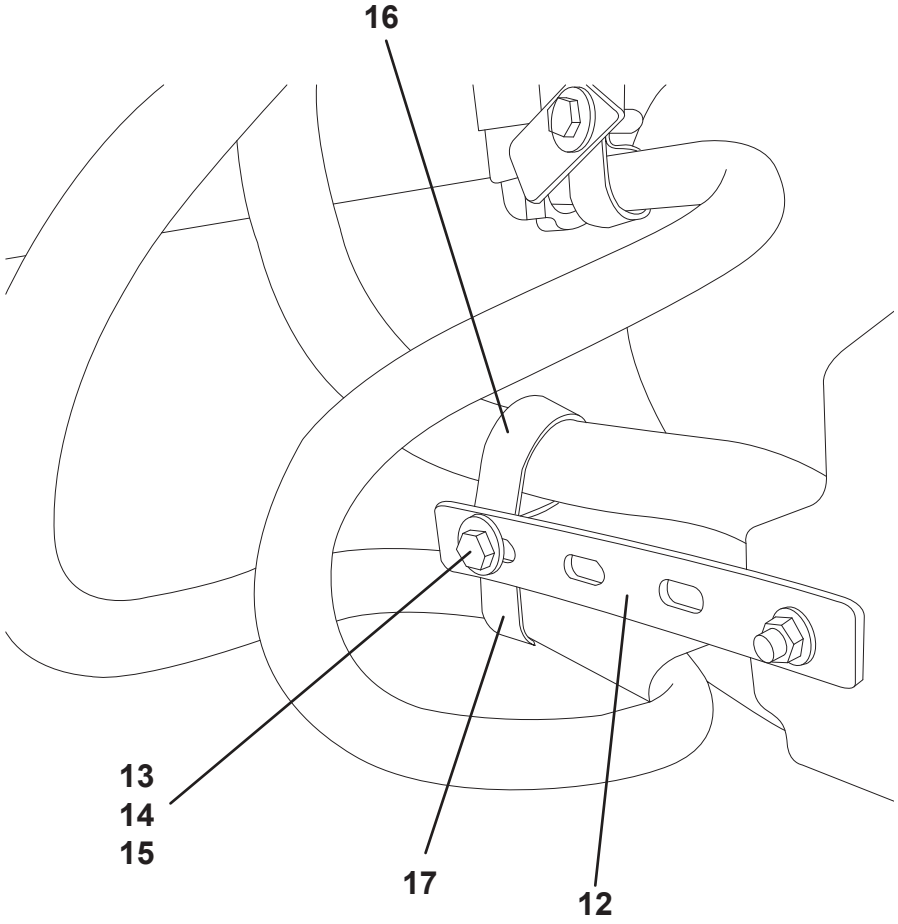

HYDRAULIC RESERVOIR AND TOOLBOX / BASKET

ITEM	PART NO.	DESCRIPTION	QTY
1	4178000331	Mounting Bracket - Short	
	4178000291	Mounting Bracket - Std.	
	4178000339	Mounting Bracket - Long	
2	4178000330	Mounting Bracket - Short	
	4178000290	Mounting Bracket - Std.	
	4178000338	Mounting Bracket - Long	
3	3750000018	Hydraulic Reservoir Assembly	
4	7183000004+	Breather Filler Cap Assembly	
5	7470000027+	Level Gauge	
6	7430000014+	Strainer	
7	7105181650	Capscrew, 0.50”-20NF x 2.00”	
8	7950180153	Flatwasher, 0.50” ID	
9	7660182333	Locknut, 0.50”-20NF	
10	7115150850	Capscrew, 0.31”-18NC x 1.00”	
11	7950150161	Flatwasher, 0.31” ID	
12	7660152601	Locknut, 0.31”-18NC	
13	3899000130	Toolbox Assembly - 36” x 18” x 18”	
	3899000131	Toolbox Assembly - 36” x 18” x 14”	
	3899000132	Toolbox Assembly - 48” x 18” x 18”	
	3899000133	Toolbox Assembly - 60” x 18” x 18”	
	3899000172	Toolbox Assembly - 78” x 21” x 20”	
14	4679000256^	Rubber Pad (36” toolbox)	
	4679000257^	Rubber Pad (48” toolbox)	
	4679000258^	Rubber Pad (60” toolbox)	
	4679000322^	Rubber Pad (78” toolbox)	
15	7118181216	Capscrew, 0.50”-13NC x 1.50”	
16	7660182301	Locknut, 0.50”-13NC	
17	4706002361	Plate	
18	4017000777	High Mount Angle	
19	3899000053	Basket -15” deep	
	3899000075	Basket -24” deep	

ITEM	PART NO.	DESCRIPTION	QTY
20	4632000015	Moulding -15” deep basket	
	4632000048	Moulding -24” deep basket	
21	7002000410	Stainless Steel Cover Plate for Basket	
		includes rivet	
22	1001156006	Bracket Weldment	
23	7701000051	Plug	

+ also available in Hydraulic Reservoir Assembly, P/N 3750000018
^ included in Toolbox Assembly

*Quantities vary depending on Hydraulic Tank / Toolbox / Basket mounting configuration.

HYDRAULIC RESERVOIR AND TOOLBOX / BASKET

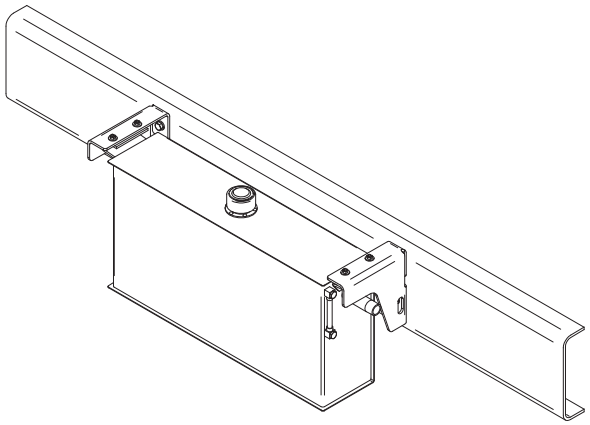

HYDRAULIC TANK ONLY

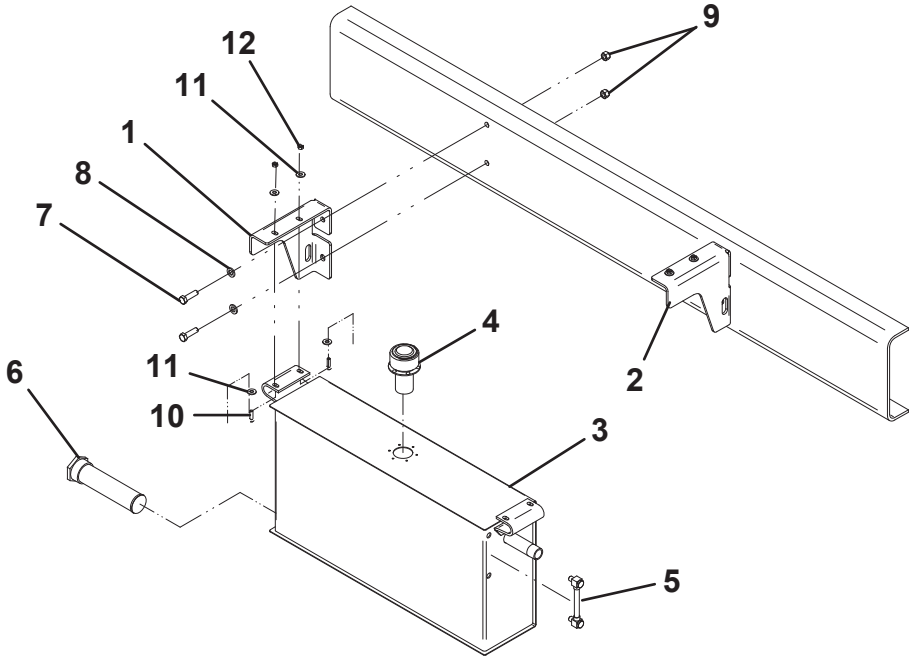

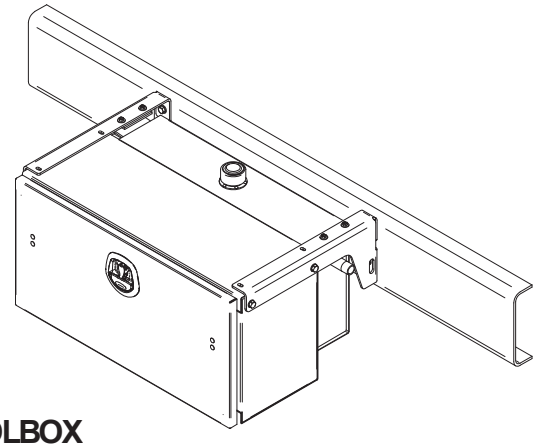

36" TOOLBOX
w/ HYDRAULIC RESERVOIR

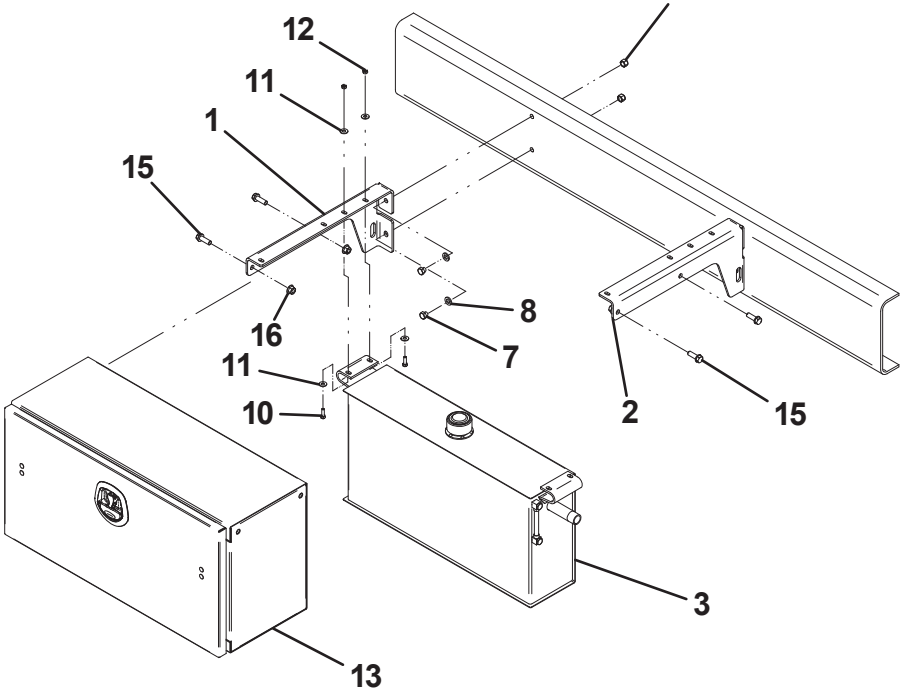

HYDRAULIC RESERVOIR AND TOOLBOX / BASKET

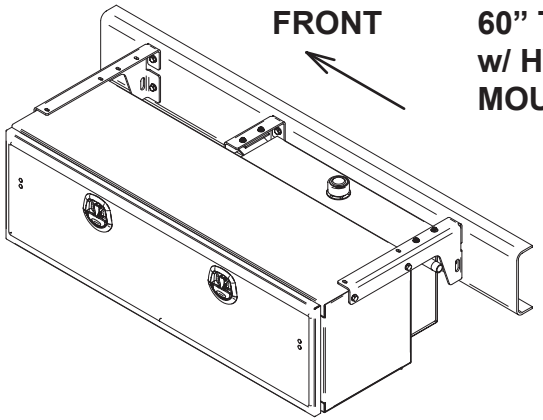

60” TOOLBOX w/ HYDRAULIC RESERVOIR MOUNTED ON DRIVER SIDE

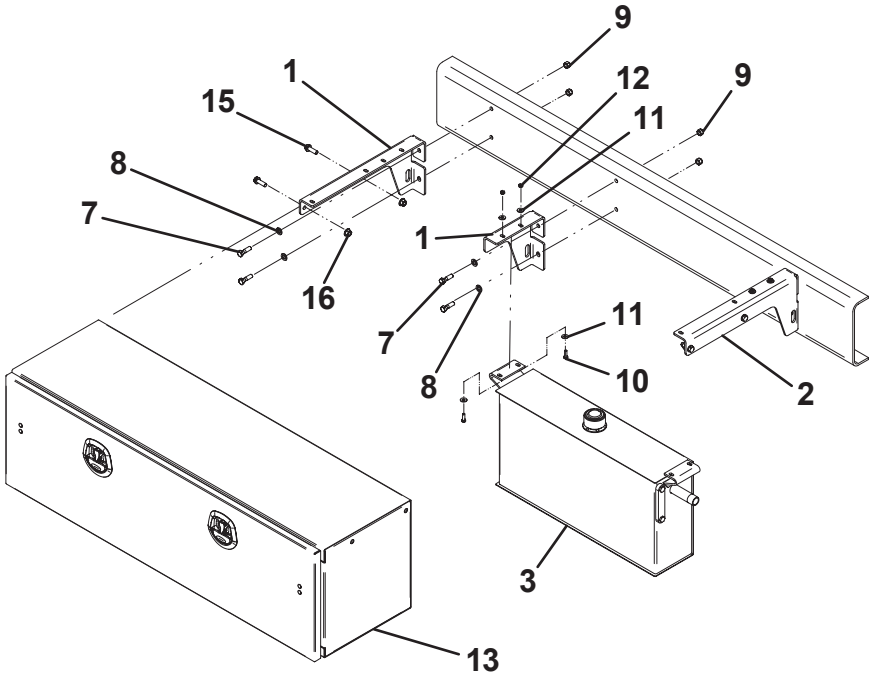

60” TOOLBOX w/ HYDRAULIC RESERVOIR MOUNTED ON PASSENGER SIDE

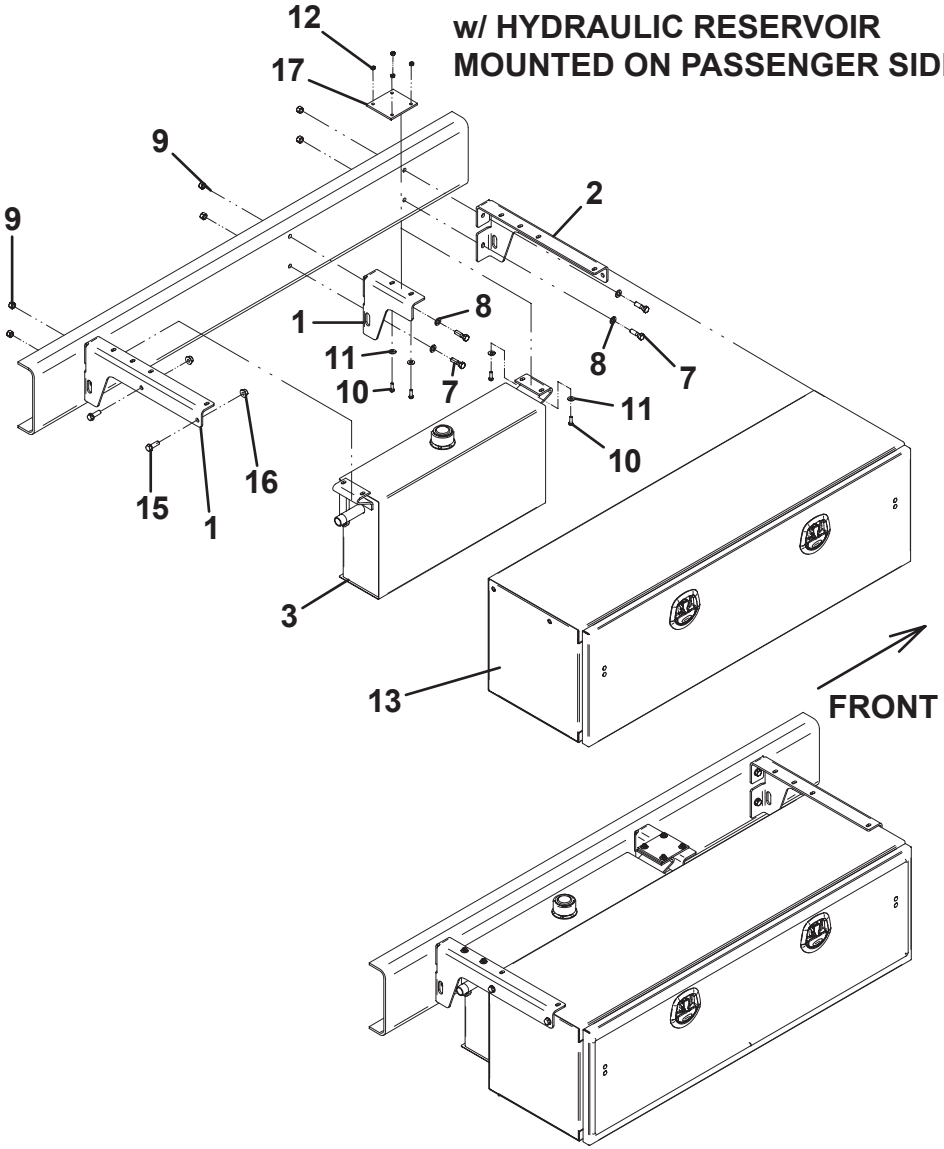

HYDRAULIC RESERVOIR AND TOOLBOX / BASKET

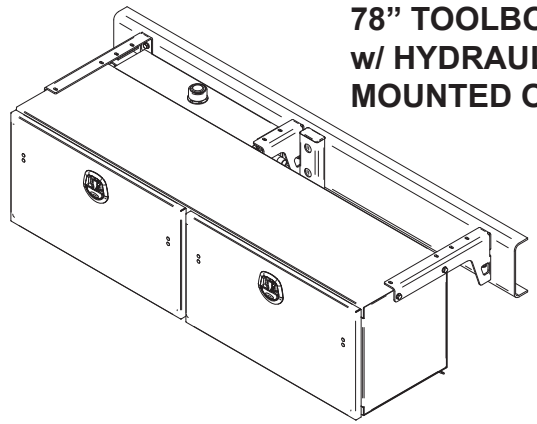

78” TOOLBOX - STANDARD MOUNT w/ HYDRAULIC RESERVOIR MOUNTED ON DRIVER SIDE

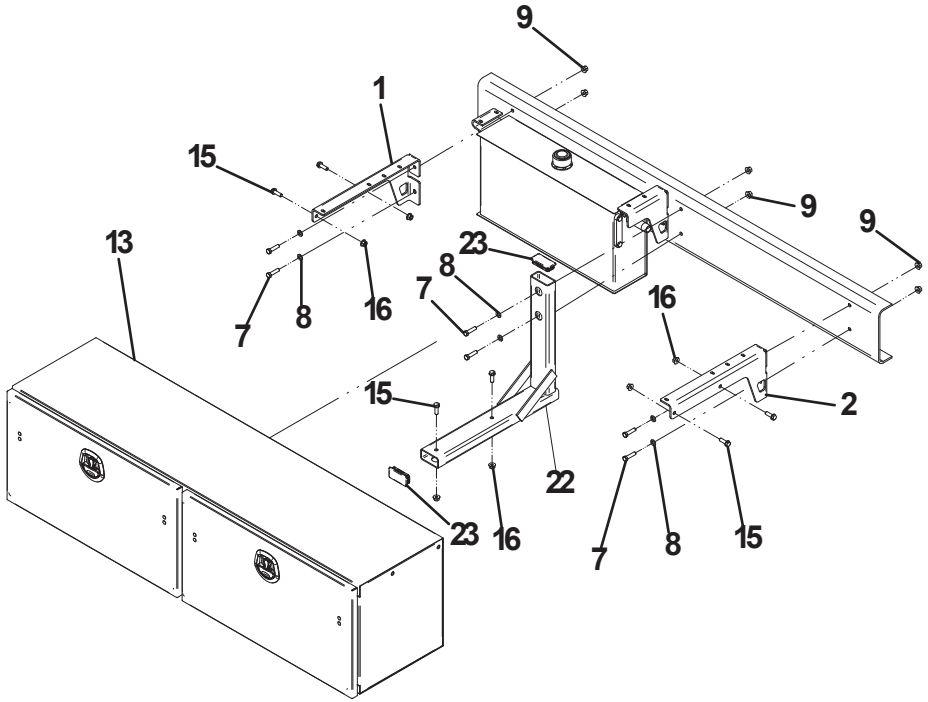

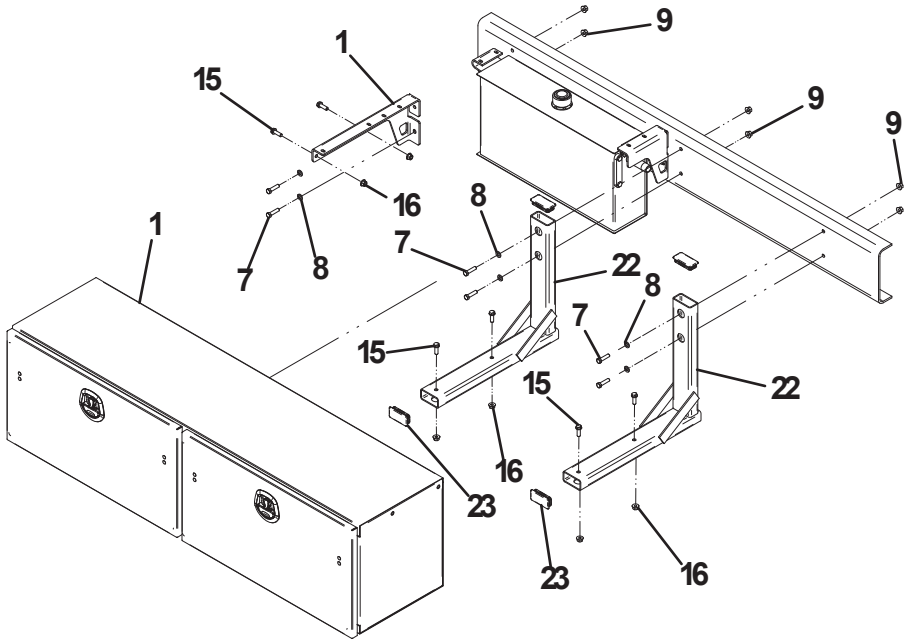

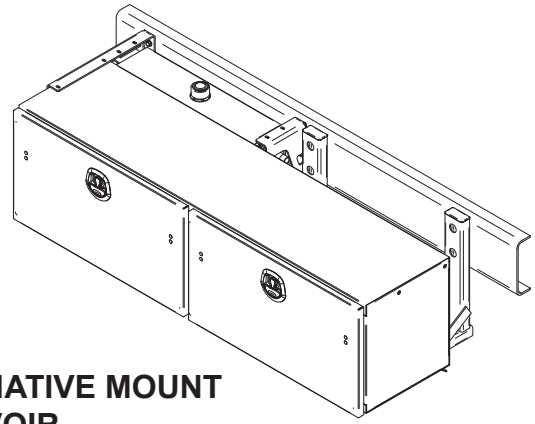

78” TOOLBOX - ALTERNATIVE MOUNT w/ HYDRAULIC RESERVOIR MOUNTED ON DRIVER SIDE

HYDRAULIC RESERVOIR AND TOOLBOX / BASKET

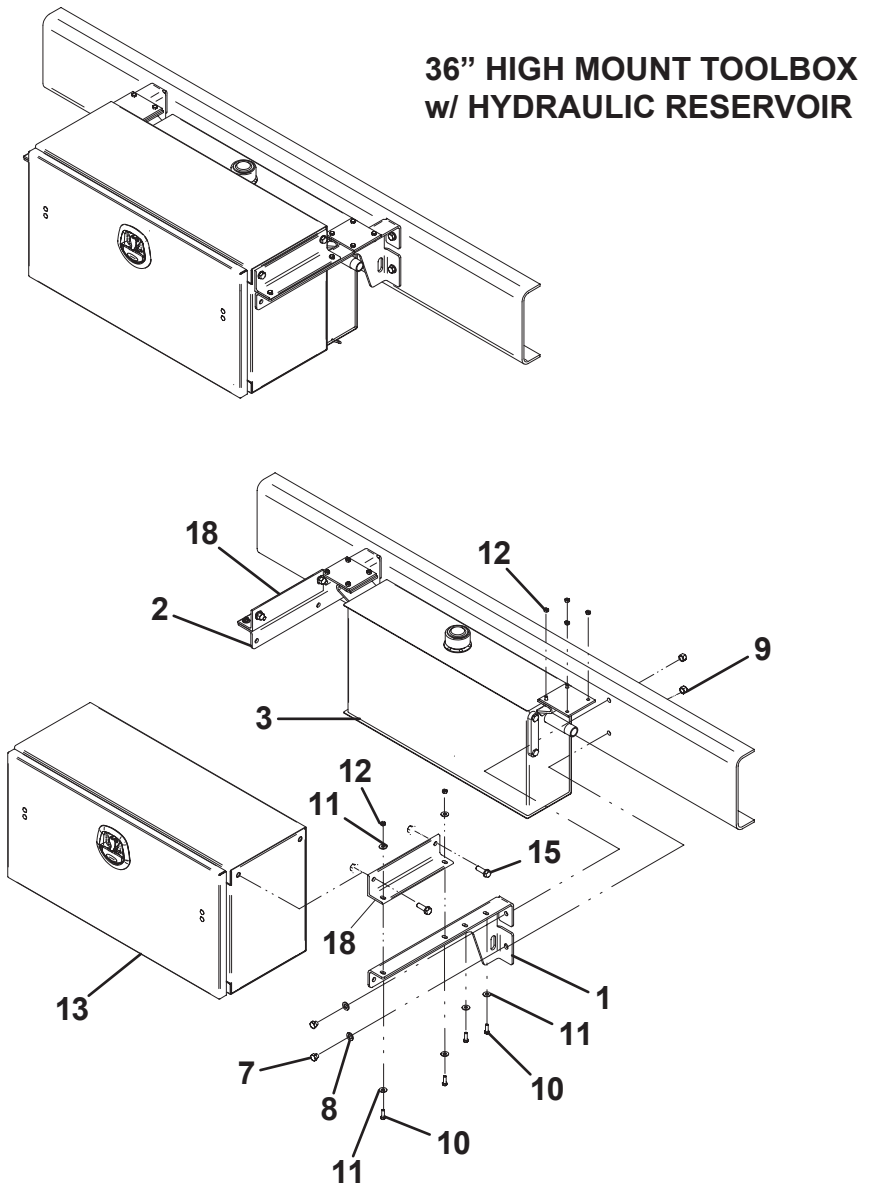

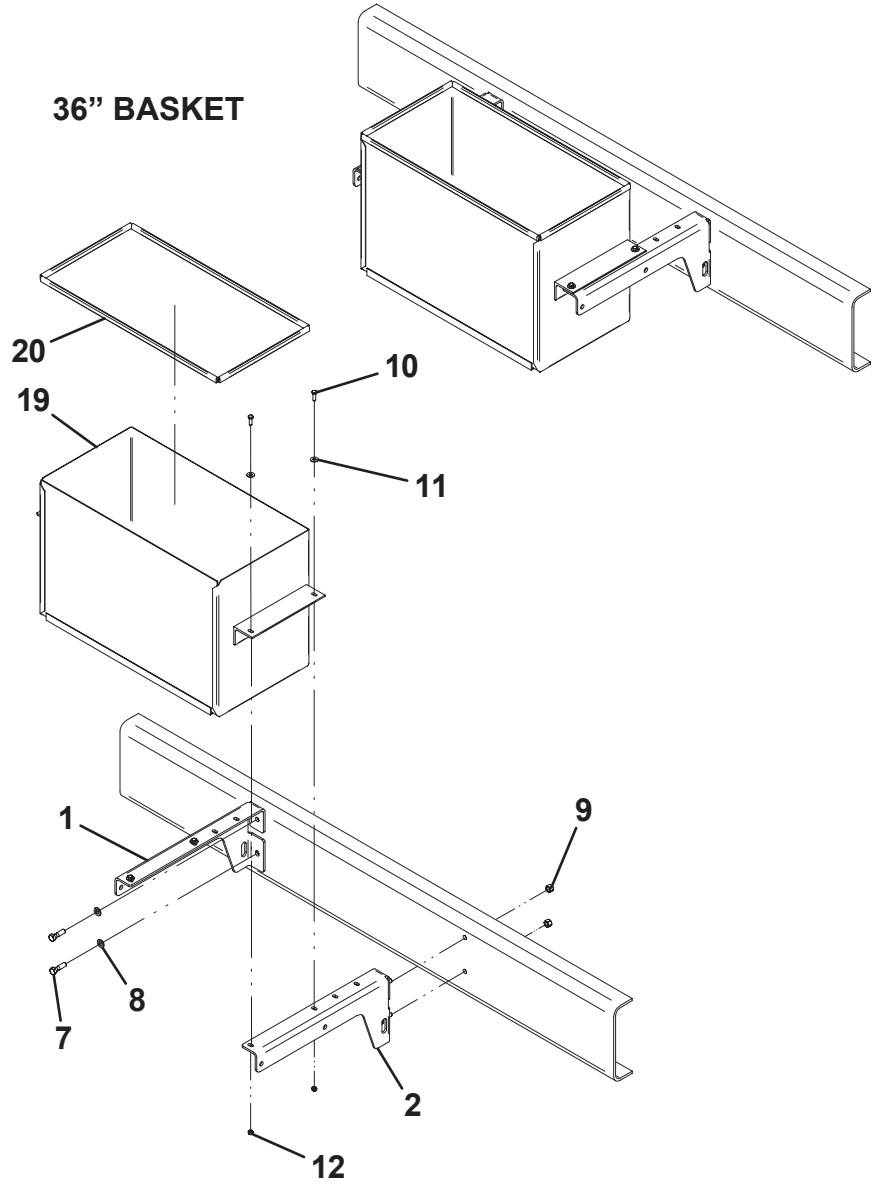

THIS PAGE INTENTIONALLY LEFT BLANK

TOOLBOX

ITEM	PART NO.	DESCRIPTION	QTY
1	3899000125	Toolbox Weld (36” toolbox)	1
	3899000126	Toolbox Weld (60” toolbox)	1
	3899000127	Toolbox Weld (48” toolbox)	1
	3899000173	Toolbox Weld (78” toolbox)	1
2	4679000256	Rubber Pad (36” toolbox)	1
	4679000257	Rubber Pad(36” narrow toolbox)	1
	4679000258	Rubber Pad (48” toolbox)	1
	4679000258	Rubber Pad (60” toolbox)	1
	4679000322	Rubber Pad (78” toolbox)	1
3	4796000009	Gasket (36” toolbox)	1
	4796000010	Gasket (48” toolbox)	1
	4796000011	Gasket (60” toolbox)	1
	4796000012	Gasket (78” toolbox)	2
4	9899000014	Toolbox Door Assembly (36” toolbox)	1
	9899000015	Toolbox Door Assembly (48” toolbox)	1
	9899000016	Toolbox Door Assembly (60” toolbox)	1
	9899000023	Toolbox Door Assembly (78” toolbox)	1

Quantities listed are for one toolbox

ITEM	PART NO.	DESCRIPTION	QTY
		Toolbox Door Assembly Components (per door)	
101	4706005020	Toolbox Door (36” toolbox)	1
	4706005021	Toolbox Door (48” toolbox)	1
	4706005022	Toolbox Door (60” toolbox)	1
	4706006234	Toolbox Door (78” toolbox)	1
102	7585000019^	Latch (36” & 78”)	1
	7585000019^	Latch (48” & 60”)	2
103	7555000016*	Hinge (36” & 78” toolbox)	1
	7555000016*	Hinge (60” toolbox)	2
	7555000015*	Hinge (48” toolbox)	1
104	7759000020*^	Rivet (36” & 78” toolbox)	18
	7759000020*^	Rivet (48” toolbox)	28
	7759000020*^	Rivet (60” toolbox)	36
105	4178000599*	Bracket	2
106	7114140465*	Carriage Bolt, 0.25”-20NC x 0.50”	4
107	7660142604*	Locknut, 0.25”-20NC	4
108	7592000005^	S Link (36”, 48”, 60” toolbox)	4
	7592000005^	S Link (78” toolbox)	8
109	7248000114^	Cable (36”, 48”, & 60” toolbox)	2
	7248000155^	Cable (78” toolbox)	4

* Also available in Toolbox Door Sub-Assembly:
9899000020 - 36” Toolbox
9899000021 - 48” Toolbox
9899000022 - 60” Toolbox
9899000024 - 78” Toolbox

^ Also available in Toolbox Door Hardware Kit:
9577030278 - 36” Toolbox
9577030279 - 48” Toolbox
9577030280 - 60” Toolbox
9577030303 - 78” Toolbox

TOOLBOX

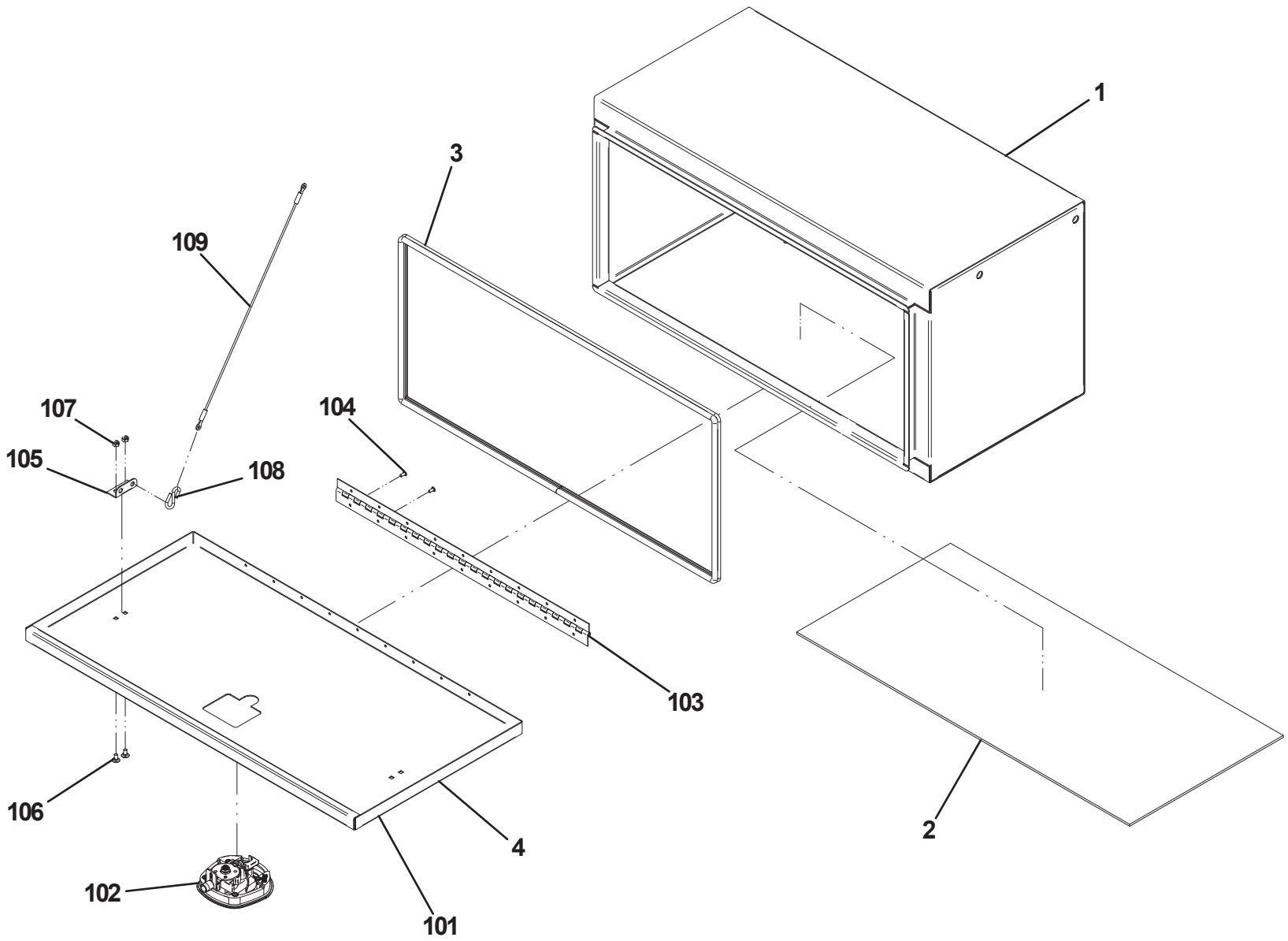

TOOLBOX SHELF

ITEM	PART NO.	DESCRIPTION	QTY
1	4017001403	Angle	2
2	4811000841	Shelf (36” toolbox)	1
	4811000843	Shelf (48” toolbox)	
	4811000868	Shelf (60” toolbox)	
3	7115150850	Capscrew, 0.31”-18NC x 1.00”	4
4	7950150161	Flatwasher, 0.31” ID	8
5	7660152601	Locknut, 0.31”-18NC	4

TOOLBOX SHELF

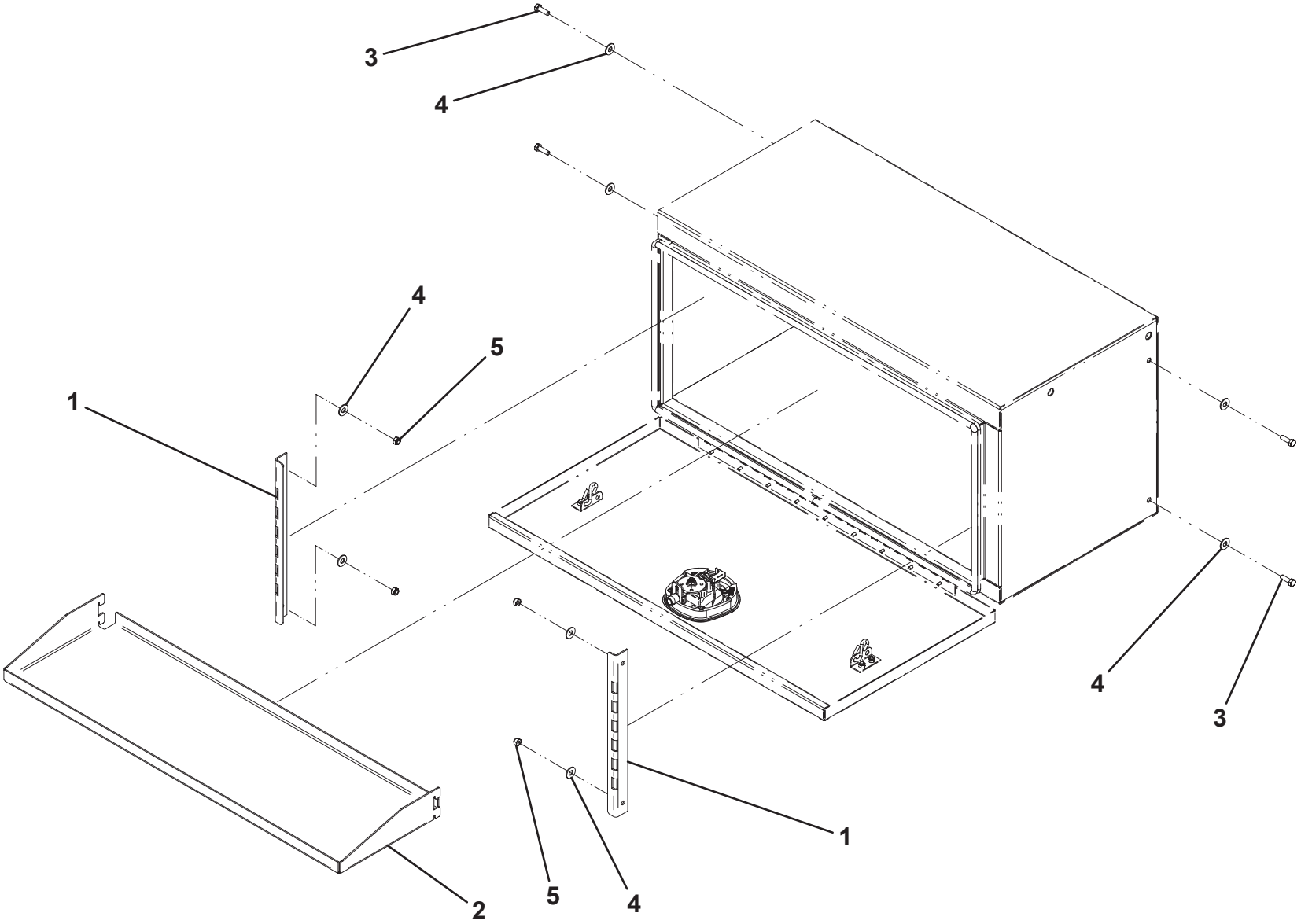

TOOLBOX LIGHT

ITEM	PART NO.	DESCRIPTION	QTY
1	4178000578*	Bracket	1
2	7590000273*	Dome Light	1
3	7870000115*	Switch	1
4	7280000007*	Wire Mount Clip	3
5	7661000047*	Panel Nut	4
6	7790100856*	Screw, #10 x 0.50”	4
7	7443000377	Fitting	1
8	7552000297	Toolbox Light Harness	1

* included in Toolbox Light Bracket Assembly P/N 3178000437

TOOLBOX LIGHT

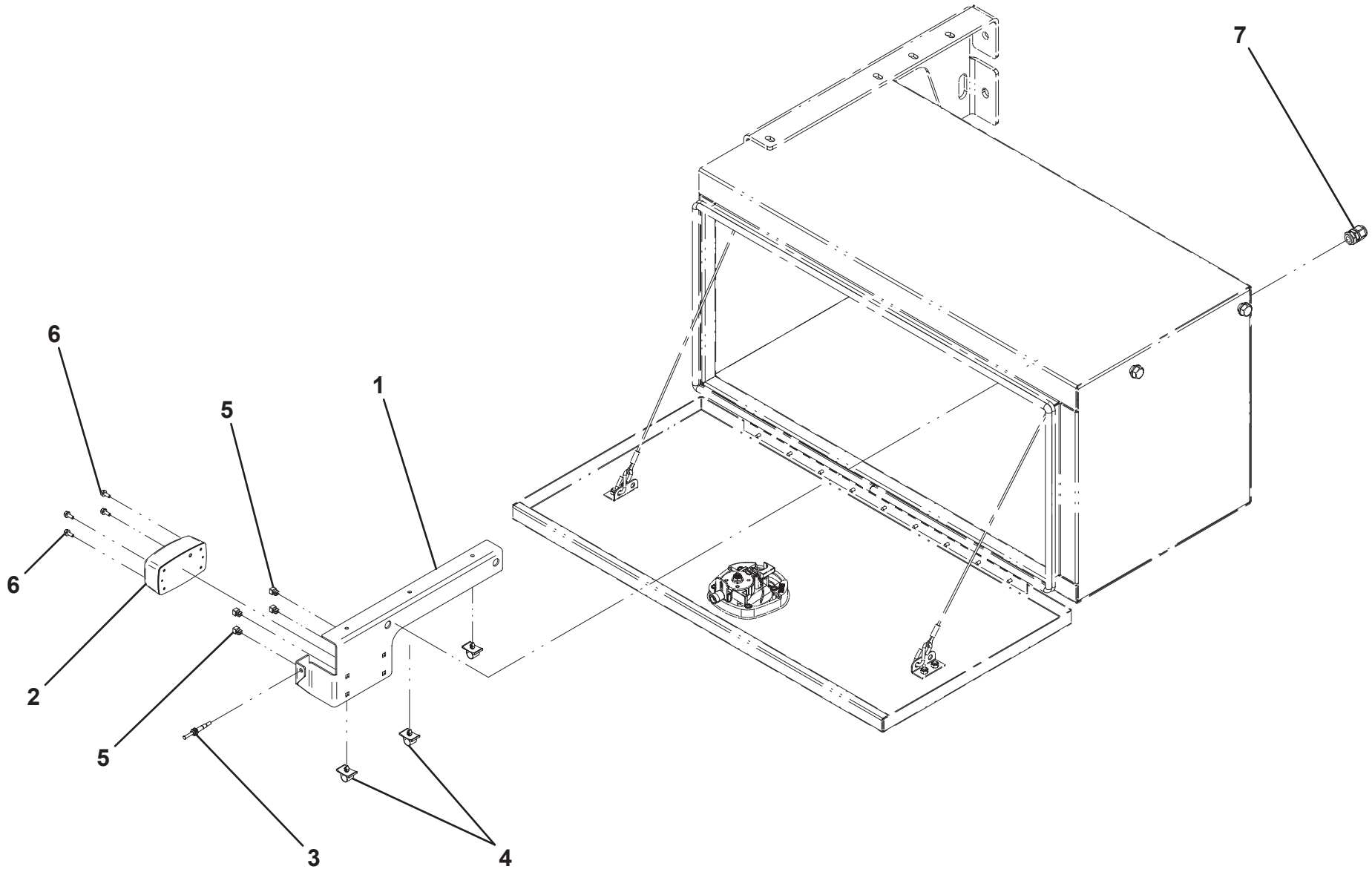

TOOLBOX TOP STORAGE TRAY AND MARKER LIGHTS

ITEM	PART NO.	DESCRIPTION	QTY
1	3811000053*	Tray Weldment (36” Toolbox)	1
	3811000054	Tray Weldment (48” Toolbox)	
	3811000055	Tray Weldment (60” Toolbox)	
	3811000057	Tray Weldment (78” Toolbox)	
2	4706006216	Plate	2
3	7115160950	Capscrew, 0.38”-16NC x 1.12”	4
4	7950150161	Flatwasher, 0.38” ID	8
5	7660162601	Locknut, 0.38”-16NC	8
6	7552000451	Toolbox Light Tray Harness	1
7	7590000342	Marker Light - Amber (LED)	2
8	7493000009	Grommet	2
9	7493000031	Grommet	2
10	7894000004	Tie Strap	6

TOOLBOX TOP STORAGE TRAY AND MARKER LIGHTS

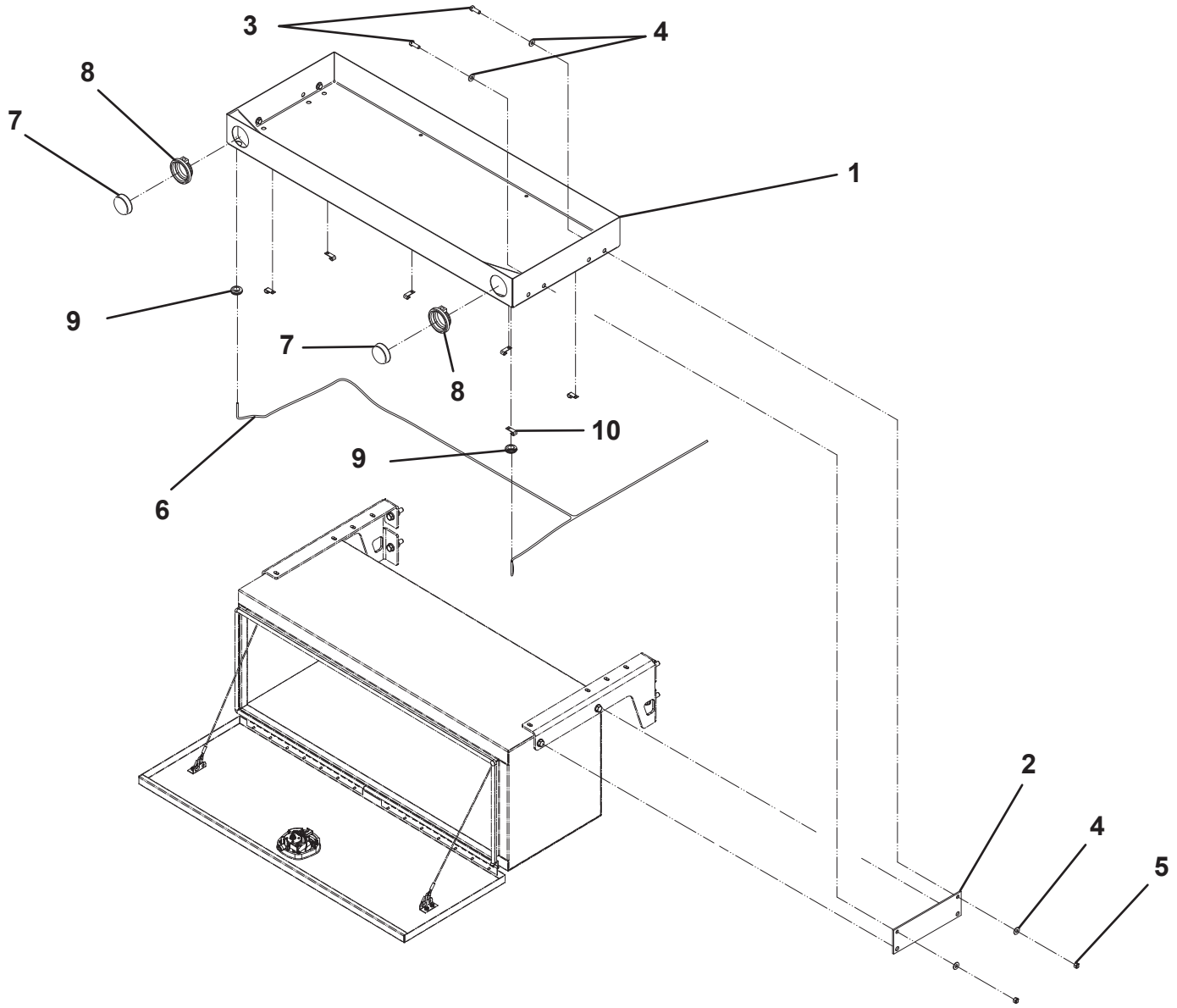

TOOLBOX TOP STORAGE TRAY AND MARKER LIGHTS W/UNDERBOX MOUNT

ITEM	PART NO.	DESCRIPTION	QTY
1	3811000053*	Tray Weldment (36” Toolbox)	1
	3811000054	Tray Weldment (48” Toolbox)	
	3811000055	Tray Weldment (60” Toolbox)	
	3811000057	Tray Weldment (78” Toolbox)	
2	4706006216	Plate	2
3	7115160950	Capscrew, 0.38”-16NC x 1.12”	4
4	7950150161	Flatwasher, 0.38” ID	8
5	7660162601	Locknut, 0.38”-16NC	8
6	1001155975	Bracket	1
7	7552000451	Toolbox Light Tray Harness	1
8	7590000342	Marker Light - Amber (LED)	2
9	7493000009	Grommet	2
10	7493000031	Grommet	2
11	7894000004	Tie Strap	6

TOOLBOX TOP STORAGE TRAY AND MARKER LIGHTS W/ UNDERBOX MOUNT

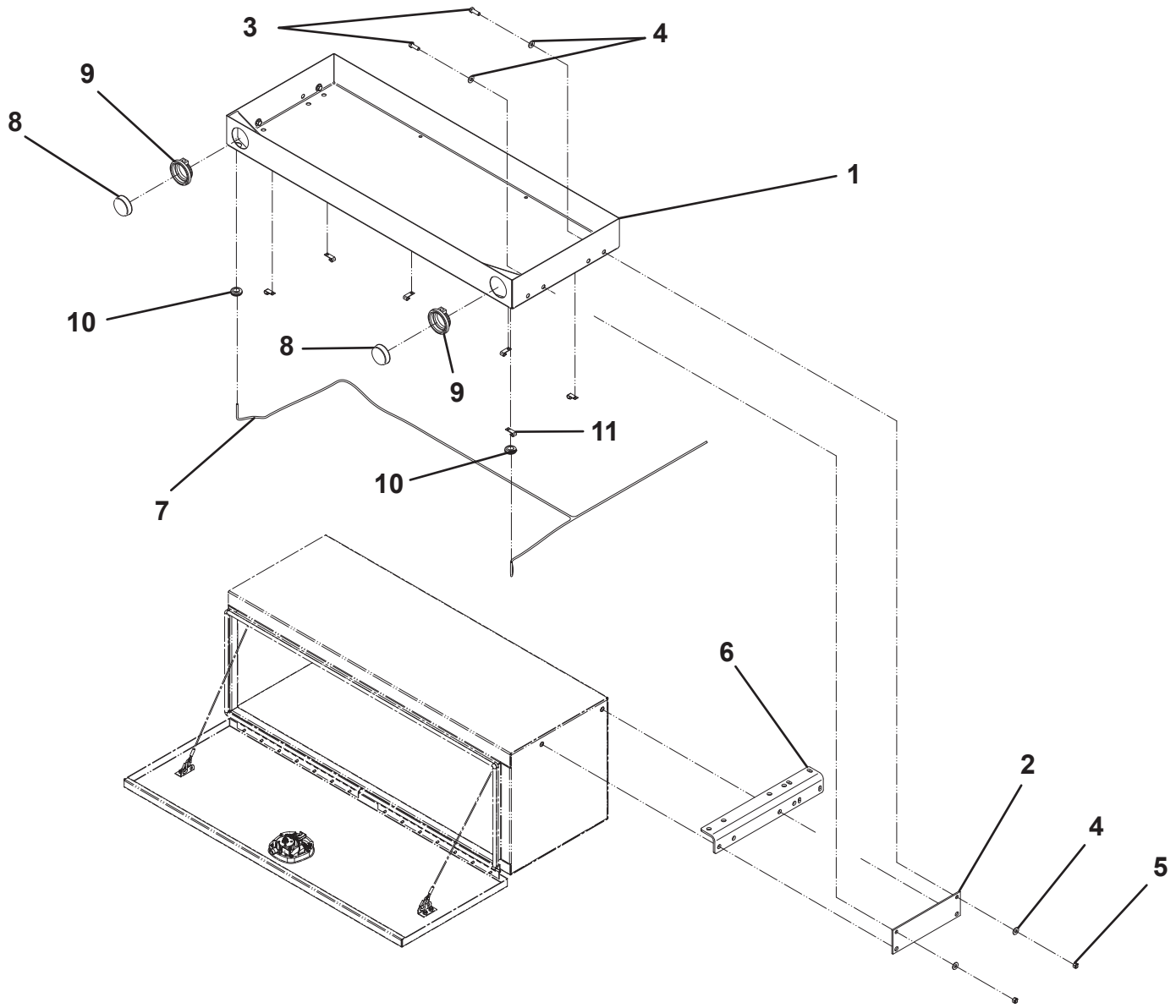

24” TUNNEL TOOLBOX INSTALLATION

ITEM	PART NO.	DESCRIPTION	QTY
1	1001143227	Toolbox Assembly	1
2	1001148455	Bracket	2
3	7105201850	Bolt, 0.62"-18NF x 2.25"	8
4	7660202347	Locknut, 0.63"-18NF	14
5	7950200161	Flatwasher, 0.63" ID	6
6	7950200242	Flatwasher, 0.63" ID	8
7	7105202050	Bolt, 0.62"-18NF x 2.50"	6
8	1001148180	Bumper	1
9	1001148385	Bracket	1
10	7115181250	Capscrew, 0.50"-13NC x 1.50"	4
11	7660182601	Locknut, 0.50"-13NC	4
12	7950180153	Flatwasher, 0.50" ID	4
13	7950200152	Flatwasher, 0.62" ID	4
14	7660200035	Nut, 0.63"-18NF	2
15	7105201650	Bolt, 0.62"-18NF x 2.00"	4
16	4796000037	Gasket	2
17	1001146552	Harness	1
		Toolbox Assembly -1001143227	
18	1001142430	Toolbox	1
19	1001143257	Bracket	6
20	7950160153	Flatwasher, 0.38" ID	24
21	7660162601	Locknut, 0.38"-16NC	24
22	7114161618	Capscrew, 0.38"-16NC x 2.00"	24
23	7330000408	Decal, Jerr-Dan Logo	2
24	8632000002	Trim	7.5 ft
25	70050659	R.O.M. Door	2

24” TUNNEL TOOLBOX INSTALLATION

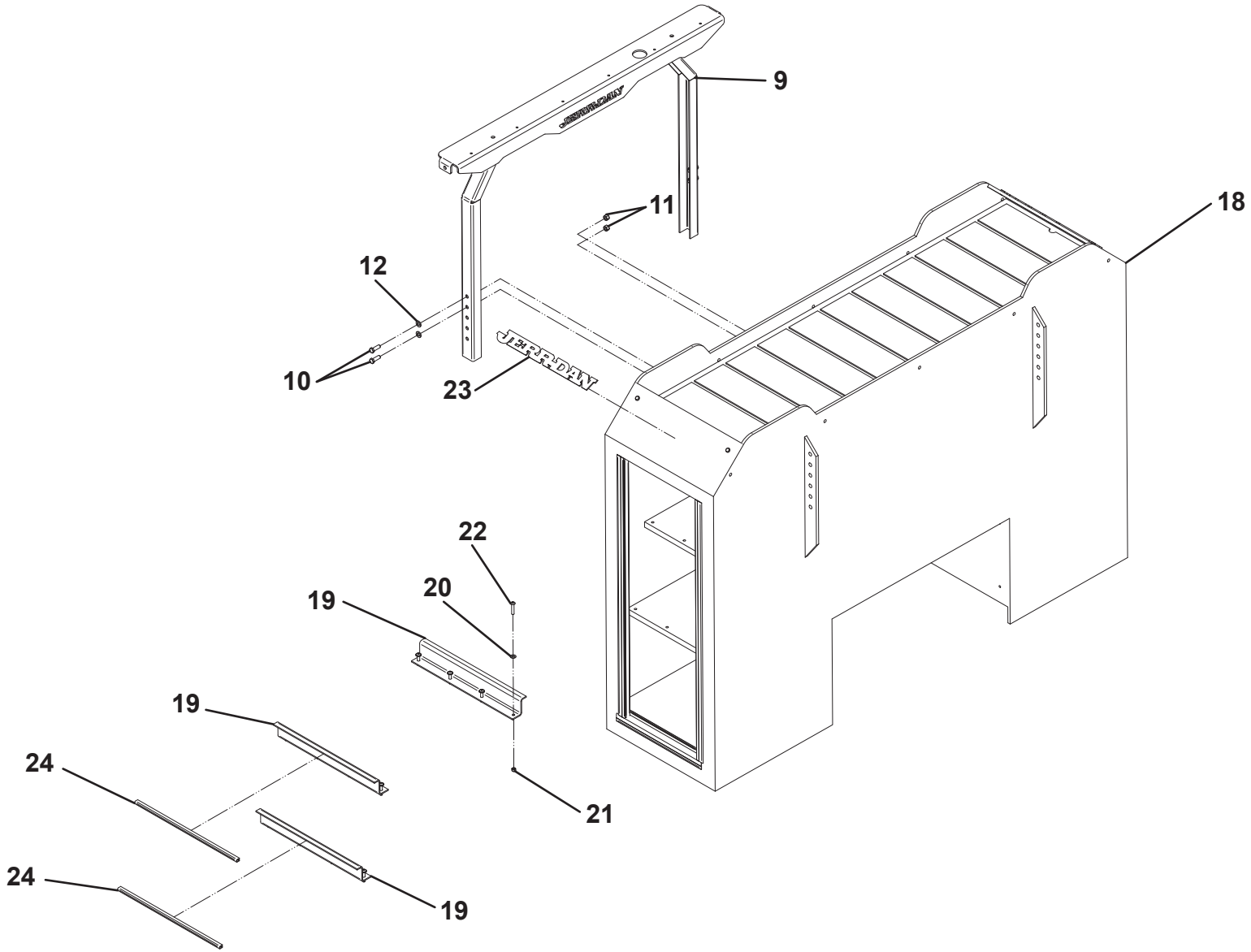

24” TUNNEL TOOLBOX INSTALLATION

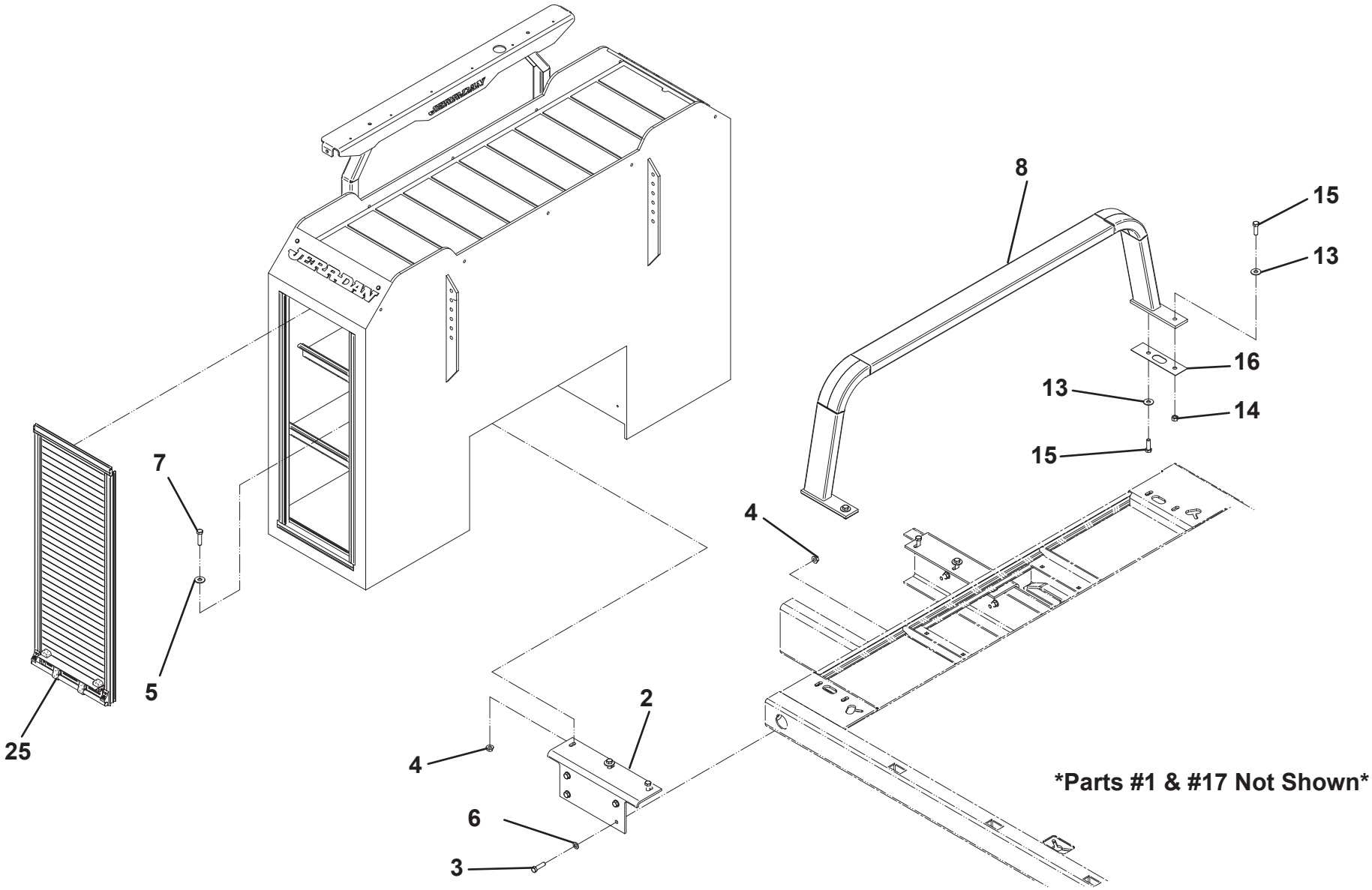

24” TUNNEL TOOLBOX INSTALLATION

THIS PAGE INTENTIONALLY LEFT BLANK

DUAL CONTROLS - 3 BANK

ITEM	PART NO.	DESCRIPTION	QTY
1	3935000115	Valve Assy 3 Bank w/TR	1
2	1001143764	Lamp	2
3	7330000648	Decal, w/ IRL LH	1
4	7330000649	Decal, w/ IRL RH	1
5	7111161050	Capscrew, 0.38"-16NC x 1.25"	4
6	7950160161	Flatwasher, 0.38" ID	4
7	7660162601	Locknut, 0.38"-16NC	4
8	1001170189	Channel	1
9	7551000021	Handle Control 2.20" Offset	2
10	7551000020	Handle Control 1.32" Offset	2
11	7551000018	Handle Control Straight	2
12	7115181064	Bolt .50"-13NC x 1.25" Carriage	4
13	7691000064	Rod,Controls 0.75 Dia x 9.00	2
14	1001170187	Rod, 90 Deg Bent 96"	3
15	1001170188	Rod, Straight 96"	3
16	7115150850	Capscrew, 0.31"-18NC x 1.00"	9
17	7949000011	Flatwasher, 0.328"ID	9
18	7660152601	Locknut, 0.31"-18NC	17
19	4831000069	Spacer, Control Linkage	9
20	7759000006	Pop Rivet	8
21	7660182601	Locknut, 0.50"-13NC	4
22	8632000012	Trim	0.5
23	7790151253	Screw, 0.31"-18NC x 0.75"	12
24	7950180161	Flatwasher, 0.50" ID	4
25	7690101200	Pin	3
26	7691000056	Pin, Hairpin Cotter	3
27	3560000010	Control Hood Assy W/Gauge	1
28	7115150664	Bolt, 0.31"-18NC x 0.75"	8
29	7950150161	Washer, 0.31" ID	8
30	1001135272	Channel	1
31	7950220141	Flatwasher, 0.75" ID	2
32	4211000001	Bushing	4
33	7280000007	Clip	11
34	7949000054	Washer, 0.34" ID	8
35	7950140141	Flatwasher, 0.25" ID	1
36	7660142601	Locknut, 0.25"-20NC	1
37	7115140650	Capscrew, 0.25"-20NC x 0.75"	1
38	7274000063	Clamp	1
39	7560000007	Control Hood, RH	1

ITEM	PART NO.	DESCRIPTION	QTY
40	4606000217	Plate	4
41	7470000023	Gauge	1
42	7661000057	Nut, M5	2

DUAL CONTROLS - 3 BANK

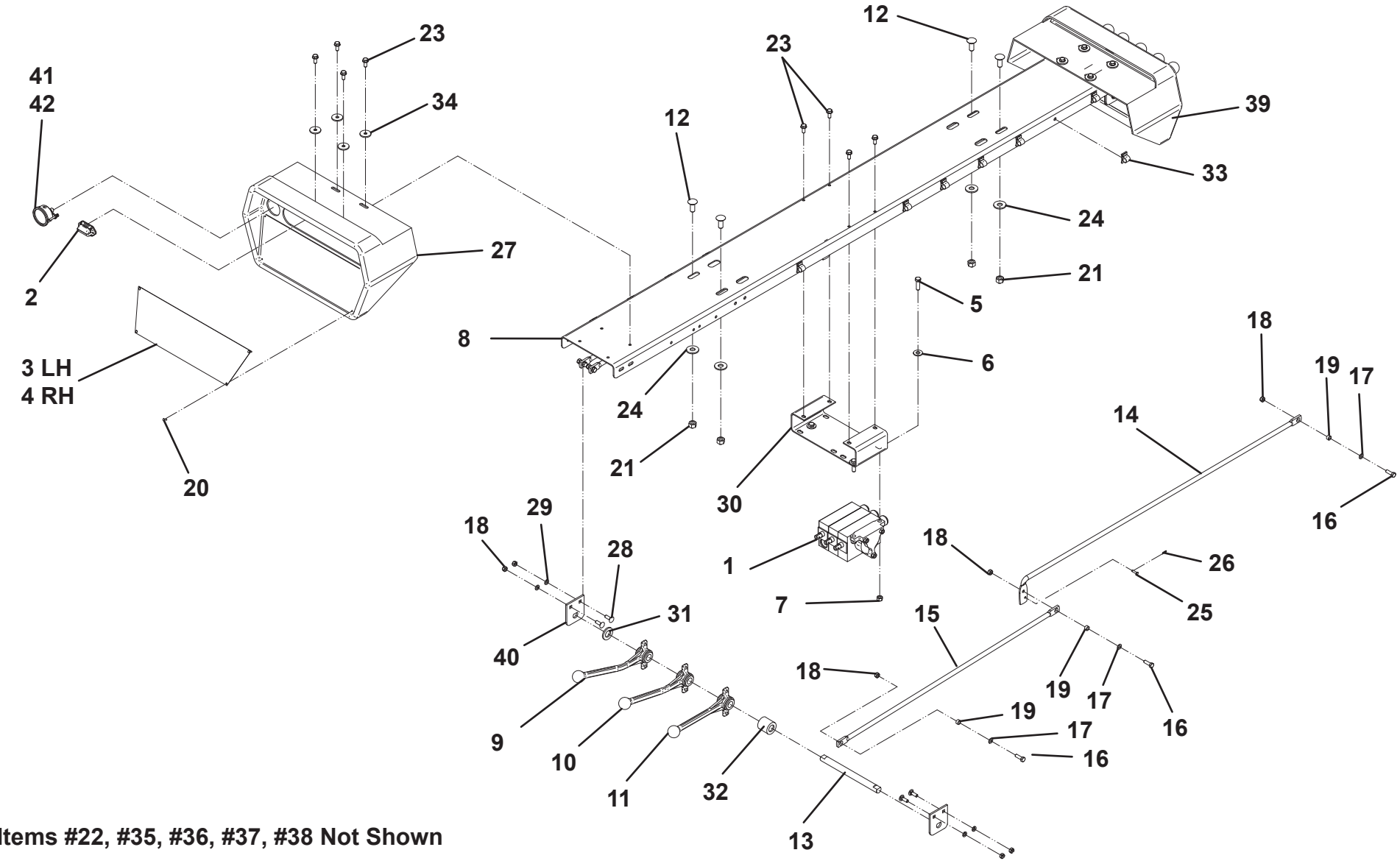

Items #22, #35, #36, #37, #38 Not Shown

DUAL CONTROLS - 4 BANK

ITEM	PART NO.	DESCRIPTION	QTY
1	1001145986	Valve,Assy 4 Bank	1
	3935000116	Valve Assy 4 Bank w/TR	1
2	1001143764	Lamp	2
3	7330000650	Decal, w/Stabilizer LH	1
	7330000648	Decal, w/ IRL LH	1
4	7330000651	Decal, w/Stabilizer LH	1
	7330000649	Decal, w/ IRL RH	1
5	7111161050	Capscrew, 0.38"-16NC x 1.25"	4
6	7950160161	Flatwasher, 0.38" ID	4
7	7660162601	Locknut, 0.38”-16NC	4
8	1001170189	Channel	1
9	7551000021	Handle Control 2.20" Offset	2
10	7551000020	Handle Control 1.32" Offset	4
11	7551000018	Handle Control Straight	2
12	7115181064	Bolt .50"-13NC x 1.25" Carriage	4
13	7691000064	Rod,Controls 0.75 Dia x 9.00	2
14	1001170187	Rod, 90 Deg Bent 96"	4
15	1001170188	Rod, Straight 96"	4
16	7115150850	Capscrew, 0.31”-18NC x 1.00"	12
17	7949000011	Flatwasher, 0.328"ID	12
18	7660152601	Locknut, 0.31”-18NC	20
19	4831000069	Spacer, Control Linkage	12
20	7759000006	Pop Rivet	8
21	7660182601	Locknut, 0.50”-13NC	4
22	8632000012	Trim	0.5
23	7790151253	Screw, 0.31”-18NC x 0.75"	12
24	7950180161	Flatwasher, 0.50" ID	4
25	7690101200	Pin	4
26	7691000056	Pin, Hairpin Cotter	4
27	3560000010	Control Hood Assy W/Gauge	1
28	7115150664	Bolt, 0.31”-18NC x 0.75"	8
29	7950150161	Washer, 0.31" ID	8
30	1001135272	Channel	1
31	7950220141	Flatwasher, 0.75" ID	2
32	4211000001	Bushing	2
33	7280000007	Clip	11
34	7949000054	Washer, 0.34"ID	8
35	7950140141	Flatwasher, 0.25" ID	1
36	7660142601	Locknut, 0.25”-20NC	1
37	7115140650	Capscrew, 0.25”-20NC x 0.75"	1
38	7274000063	Clamp	1
39	7560000007	Control Hood, RH	1
40	4606000217	Plate	4
41	7470000023	Gauge	1
42	7661000057	Nut, M5	2

DUAL CONTROLS - 4 BANK

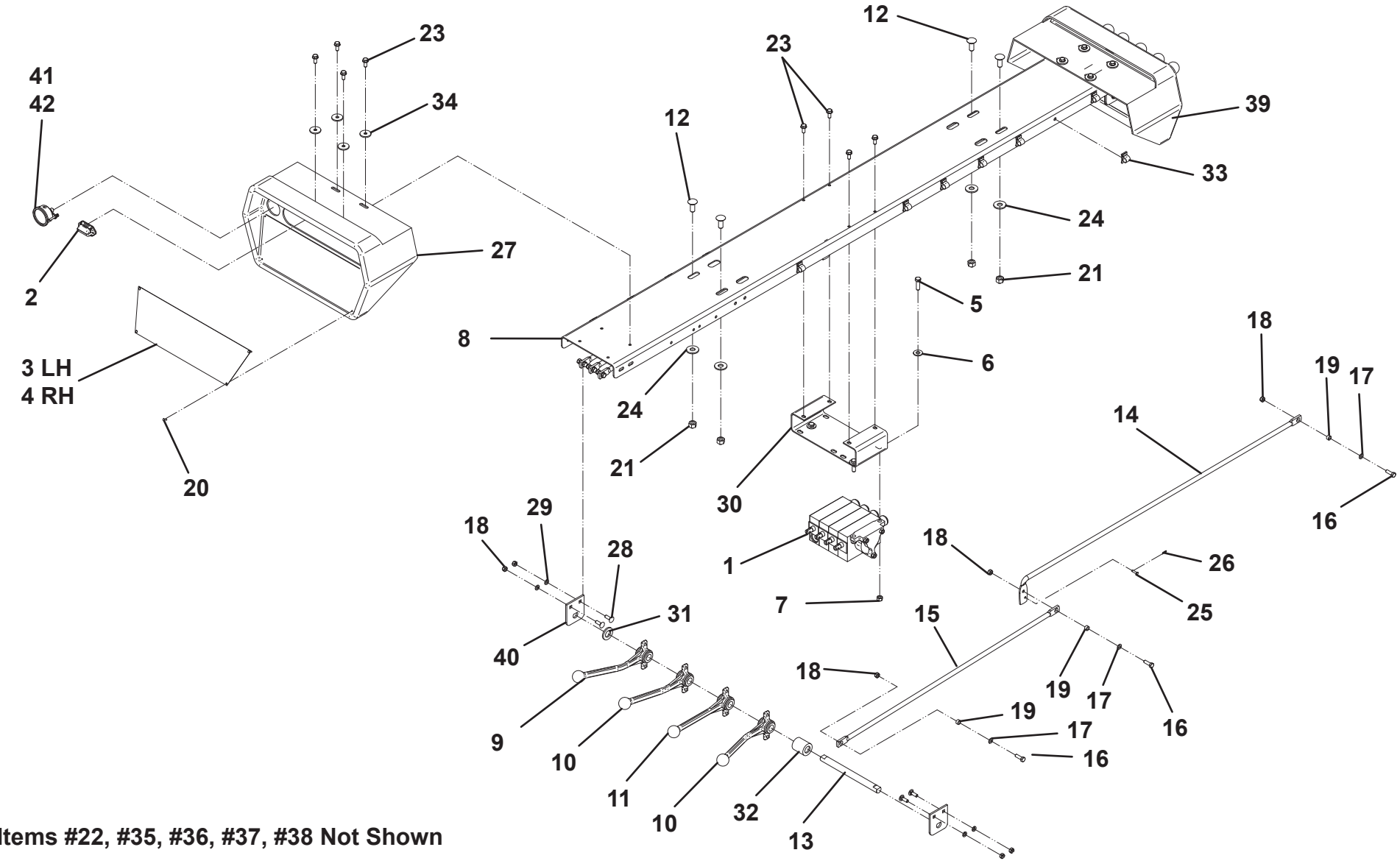

Items #22, #35, #36, #37, #38 Not Shown

DUAL CONTROLS - 5 BANK

ITEM	PART NO.	DESCRIPTION	QTY
1	1001146603	Valve,Assy 5 Bank	1
	3935000117	Valve Assy 5 Bank w/TR	1
2	1001143764	Lamp	2
3	7330000648	Decal, w/ IRL LH	1
	7330000650	Decal, w/Stabilizer LH	1
4	7330000649	Decal, w/ IRL RH	1
	7330000651	Decal, w/Stabilizer LH	1
5	7111161050	Capscrew, 0.38"-16NC x 1.25"	4
6	7950160161	Flatwasher, 0.38" ID	4
7	7660162601	Locknut, 0.38”-16NC	4
8	1001170189	Channel	1
9	7551000021	Handle Control 2.20" Offset	4
10	7551000020	Handle Control 1.32" Offset	4
11	7551000018	Handle Control Straight	2
12	7115181064	Bolt .50"-13NC x 1.25" Carriage	4
13	7691000064	Rod,Controls 0.75 Dia x 9.00	2
14	1001170187	Rod, 90 Deg Bent 96"	5
15	1001170188	Rod, Straight 96"	5
16	7115150850	Capscrew, 0.31”-18NC x 1.00"	15
17	7949000011	Flatwasher, 0.328"ID	15
18	7660152601	Locknut, 0.31”-18NC	23
19	4831000069	Spacer, Control Linkage	15
20	7759000006	Pop Rivet	8
21	7660182601	Locknut, 0.50”-13NC	4
22	8632000012	Trim	0.5
23	7790151253	Screw, 0.31”-18NC x 0.75"	12
24	7950180161	Flatwasher, 0.50" ID	4
25	7690101200	Pin	5
26	7691000056	Pin, Hairpin Cotter	5
27	3560000010	Control Hood Assy W/Gauge	1
28	7115150664	Bolt, 0.31”-18NC x 0.75"	8
29	7950150000	Washer, 0.31" ID	8
	7950150161	Flatwasher, 0.31" ID	8
30	1001135272	Channel	1
31	7950220141	Flatwasher, 0.75" ID	2
32	7280000007	Clip	11
33	7949000054	Washer, 0.34"ID	8
34	7950140141	Flatwasher, 0.25" ID	1
35	7660142601	Locknut, 0.25”-20NC	1
36	7115140650	Capscrew, 0.25”-20NC x 0.75"	1
37	7274000063	Clamp	1
38	7560000007	Control Hood, RH	1
39	4606000217	Plate	4
40	7470000023	Gauge	1
41	7661000057	Nut, M5	2

DUAL CONTROLS - 5 BANK

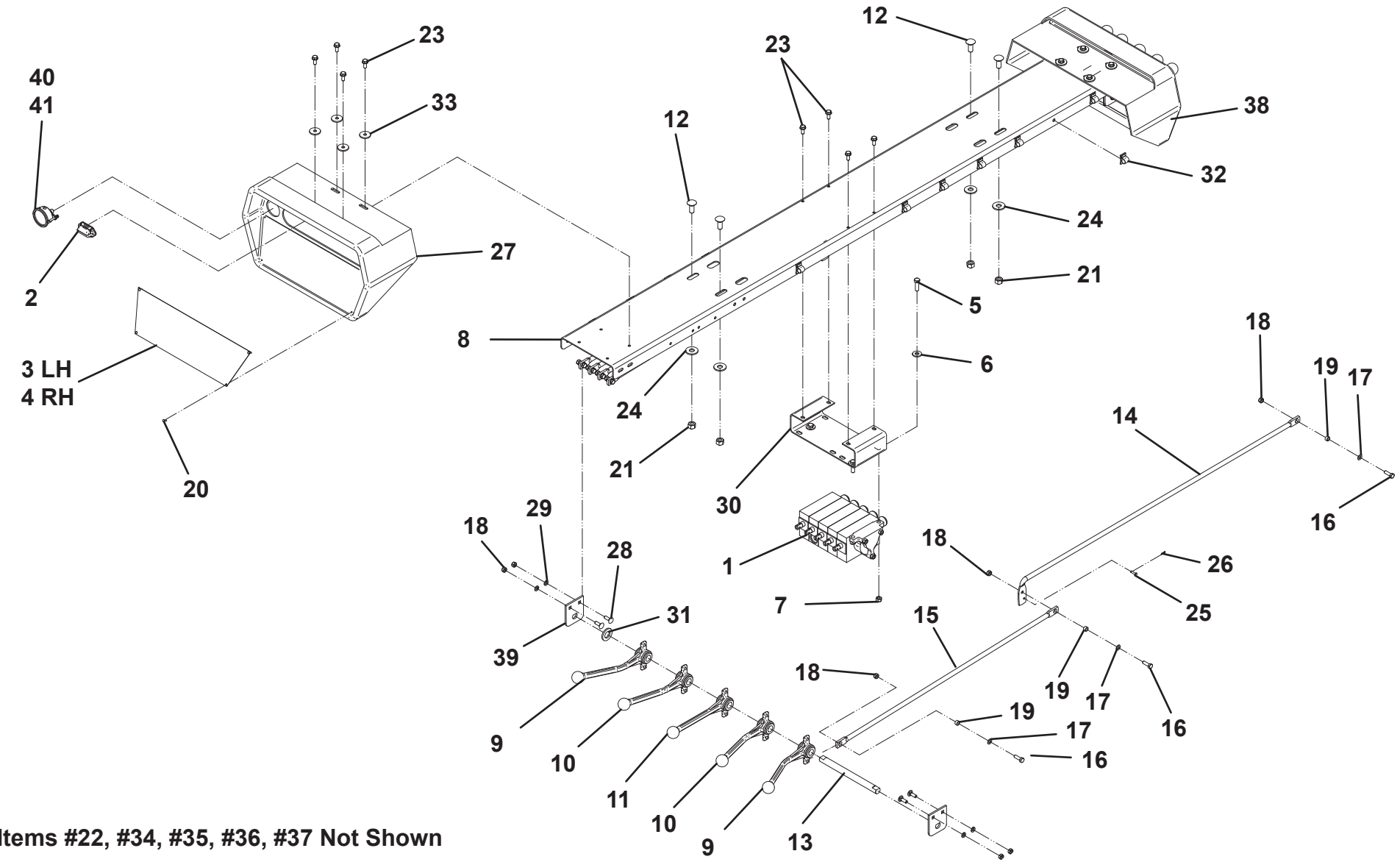

Items #22, #34, #35, #36, #37 Not Shown

DUAL CONTROLS - 6 BANK

ITEM	PART NO.	DESCRIPTION	QTY
1	3935000125	Valve Bank, 6 Section - IRL	1
	3935000166	Valve Bank, 6 Section - AUTOGrid	1
	3935000118	Valve Bank, 6 Section - ZOD	1
2	1001143764	Lamp	2
3	7330000864	Decal, Control Panel - Dual Winch - LH	1
	7330000657	Decal, Control Panel - IRL - AUTOGrid - LH	1
	7330000652	Decal, Control Panel - ZOD - LH	1
4	7330000865	Decal, Control Panel - Dual Winch - RH	1
	7330000658	Decal, Control Panel - IRL - AUTOGrid - RH	1
	7330000653	Decal, Control Panel - ZOD - RH	1
5	7111161050	Capscrew, 0.38”-16NC x 1.25"	3
6	7950160161	Flatwasher, 0.38" ID	4
7	7660162601	Locknut, 0.38”-16NC	4
8	1001170191	Channel	1
9	7551000021	Handle, Control 2.20" Offset	4
10	7551000020	Handle, Control 1.32" Offset	4
11	7551000019	Handle, Control 0.44" Offset	4
12	7115181064	Bolt, 0.50”-13NC x 1.25"	6
13	7691000065	Rod	2
14	1001170187	Rod	6
15	1001170188	Rod	6
16	7115150850	Capscrew, 0.31”-18NC x 1.00"	18
17	7949000011	Flatwasher, 0.328" ID	18
18	7660152601	Locknut, 0.31 -18NC	26
19	4831000069	Spacer	18
20	7759000006	Pop Rivet	8
21	7660182601	Locknut, 0.50”-13NC	4
22	8632000012	Trim	0.5
23	7790151253	Screw, 0.31”-18NC x 0.75"	12
24	7950180161	Flatwasher, 0.50" ID	4
25	7690101200	Pin	6
26	7691000056	Pin, Cotter	6
27	3560000010	Control Hood, w/Gauge	1
28	7115150664	Bolt, 0.31”-18NC x 0.75"	8
29	7950150161	Flatwasher, 0.31" ID	8
30	1001135329	Channel	1
31	7950220141	Flatwasher, 0.75" ID	2
32	7950140141	Flatwasher, 0.25" ID	1
33	7280000007	Clip	11
34	7949000054	Washer, 0.34"ID	8
35	7660142601	Locknut, 0.25”-20NC	1
36	7560000007	Control Hood	1
37	4606000217	Lug	4
38	7274000063	Clamp	1
39	7115140650	Capscrew, 0.25”-20NC x 0.75"	1

DUAL CONTROLS - 6 BANK

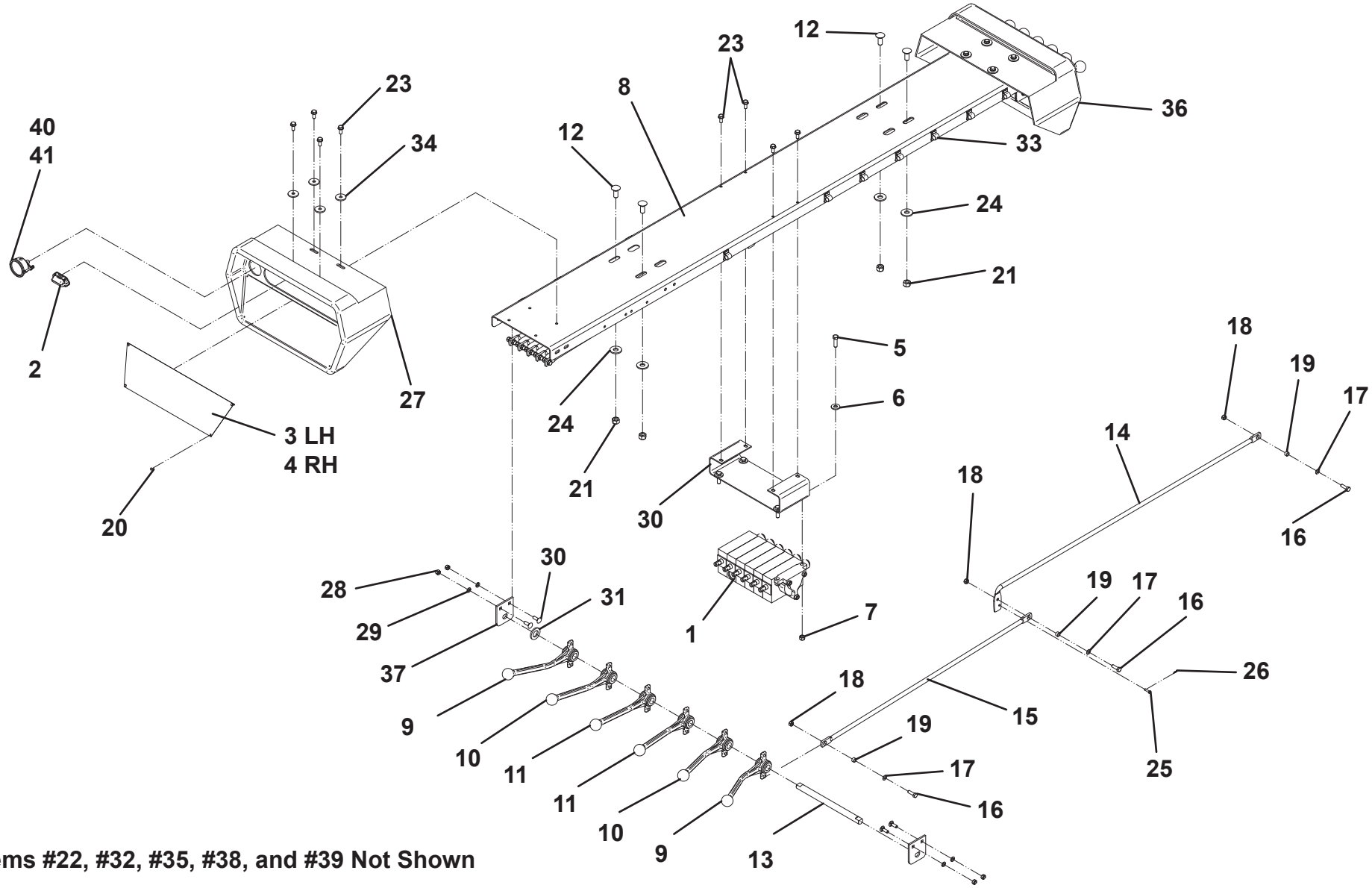

Items #22, #32, #35, #38, and #39 Not Shown

DUAL CONTROLS - 7 BANK

ITEM	PART NO.	DESCRIPTION	QTY
1	3935000150	Valve Bank, 7 Section	1
2	1001143764	Lamp	2
3	7330000548	Decal, Control Panel - LH	1
4	7330000549	Decal, Control Panel - RH	1
5	7111161050	Capscrew, 0.38”-16NC x 1.25"	4
6	7950160161	Flatwasher, 0.38" ID	4
7	7660162601	Locknut, 0.38”-16NC	4
8	1001170190	Channel	1
9	7551000022	Handle, Control 3.08" Offset	2
10	7551000021	Handle, Control 2.20" Offset	4
11	7551000020	Handle, Control 1.32" Offset	4
12	7551000019	Handle, Control 0.44" Offset	4
13	7115181064	Bolt, 0.50”-13NC x 1.25"	6
14	7691000066	Rod	2
15	1001170187	Rod	7
16	1001170188	Rod	7
17	7115150850	Capscrew, 0.31”-18NC x 1.00"	21
18	7949000011	Flatwasher, 0.328" ID	21
19	7660152601	Locknut, 0.31 -18NC	29
20	4831000069	Spacer	21
21	7759000004	Pop Rivet	8
22	7660182601	Locknut, 0.50”-13NC	6
23	8632000012	Trim	0.5
24	7950140141	Flatwasher, 0.25" ID	1
25	7790151253	Screw, 0.31”-18NC x 0.75"	12
26	7950180161	Flatwasher, 0.50" ID	6
27	7690101200	Pin	7
28	7691000056	Pin, Cotter	7
29	3560000010	Control Hood, w/Gauge	1
30	7115150664	Bolt, 0.31”-18NC x 0.75"	8
31	7950150161	Flatwasher, 0.31" ID	8
32	4263000464	Channel	1
33	7660142601	Locknut, 0.25”-20NC	1
34	7950220141	Flatwasher, 0.75" ID	4
35	4211000001	Bushing	2
36	7280000007	Clip	11
37	7949000054	Washer, 0.34"ID	8
38	7560000007	Control Hood	1
39	4606000217	Lug	4
40	7274000063	Clamp	1
41	7115140650	Capscrew, 0.25”-20NC x 0.75"	1

DUAL CONTROLS - 7 BANK

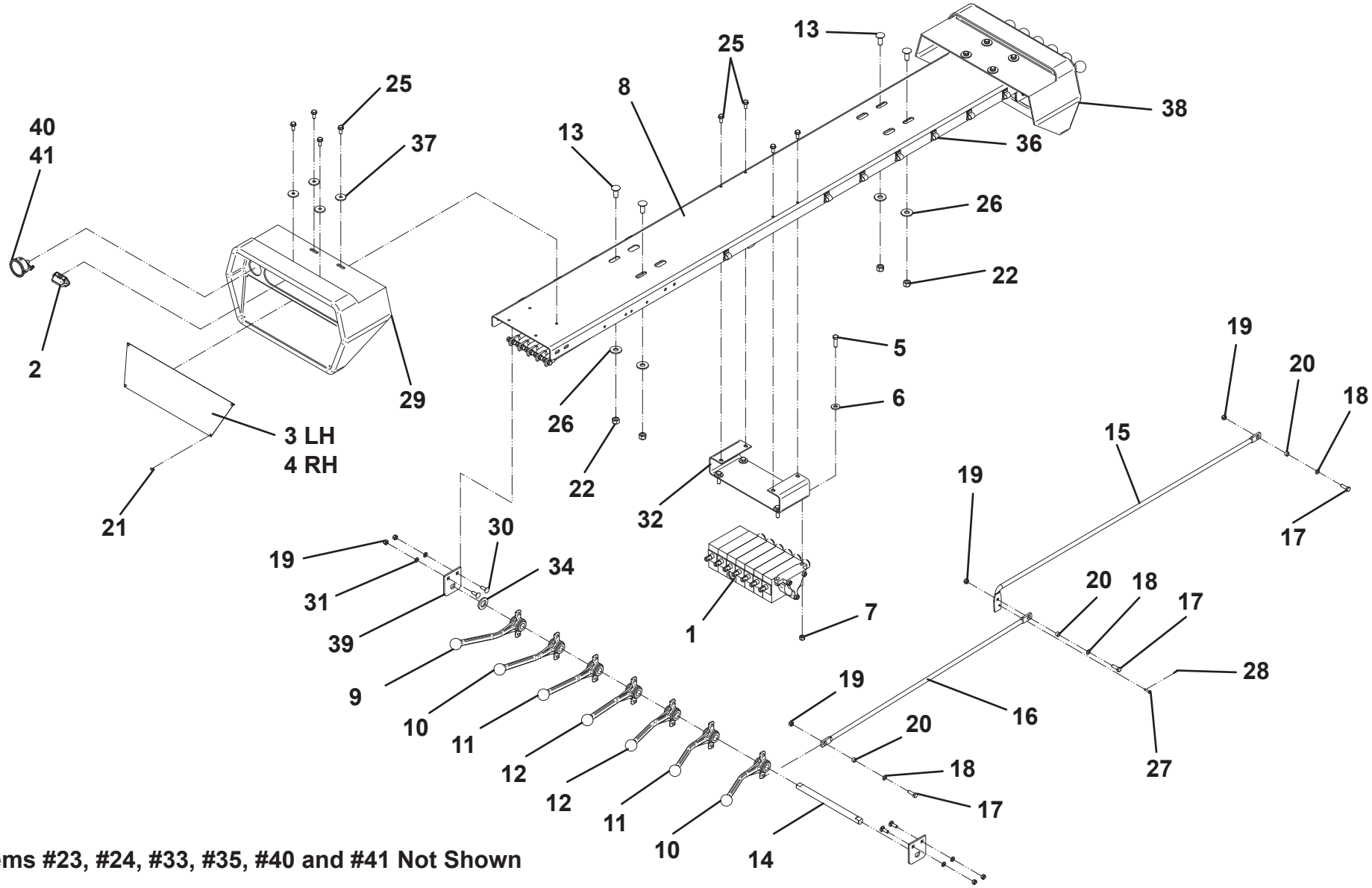

Items #23, #24, #33, #35, #40 and #41 Not Shown

HYDRAULIC COMPONENTS - STANDARD

ITEM	PART NO.	DESCRIPTION	QTY
1	7443000446	Fitting	1
2	7445080843	Adapter	2
3	7445060843	Adapter	4
4	7935000306	Valve Assembly	1
5	7445060645	Elbow	5
6	7445081045	Elbow	3
7	4706003038	Plate	1
8	7274000066	Clamp	4
9	7114101618	Capscrew, #10-24NC x 2.00"	4
10	7660102604	Locknut, #10-24UNC	4
11	4567430118	Hose Assembly	2
12	7445060643	Adapter	7
13	7904000007	Cable Track	1
14	7274000038	Clamp	4
15	7274000039	Cover	2
16	7950150161	Flatwasher, 0.31" ID	4
17	7115151650	Capscrew, 0.31"-18NC x 2.00"	2
18	7660152601	Locknut, 0.31"-18NC	12
19	7894000004	Tie Strap	10
20	7274000040	Clamp, 0.81" DIA	1
21	7274000041	Clamp, 1.25" DIA	1
22	7274000042	Clamp, 1.75" DIA	1
23	7115151850	Capscrew, 0.31"-18NC x 2.25"	2
24	4569433115	Hose Assembly	1
25	4569432115	Hose Assembly	1
26	7445040443	Adapter	1
27	7445080818	Nut, #8	1
28	4570000195	Hose Assembly	4
	4570000198	Hose Assembly	4
	1001130605	Hose Assembly	4
29	4567120015	Hose Assembly	1
30	4567120017	Hose Assembly	1
31	4567123042	Hose Assembly	1
32	4567122038	Hose Assembly	1
33	4567123044	Hose Assembly	1
34	4567122027	Hose Assembly	1
36	4567112039	Hose Assembly	1
37	See Note 1	Hose Assembly	1
38	See Note 1	Return Hose	1

ITEM	PART NO.	DESCRIPTION	QTY
39	See Note 1	Supply Hose	1
40	7430000003	Filter Assembly	1
41	7470000002	Gauge	1
42	7443000158	Elbow	1
43	7443000319	Fitting	1
44	7274000080	Clamp	2
45	7443000013	Nipple	1
46	7274000002	Clamp	2
47	7950180000	Lockwasher, 0.59" ID	2
48	7115181050	Capscrew, 0.50"-13NC x 1.25"	2
49	7724000126	Pump	1
50	7443000124	Adapter	1
51	7445081643	Adapter	1
52	7443000023	Elbow	1
53	See Note 1	PTO	1

Note 1: Varies depending on chassis, transmission, PTO type & deck length. Consult factory for part numbers.

HYDRAULIC COMPONENTS - STANDARD

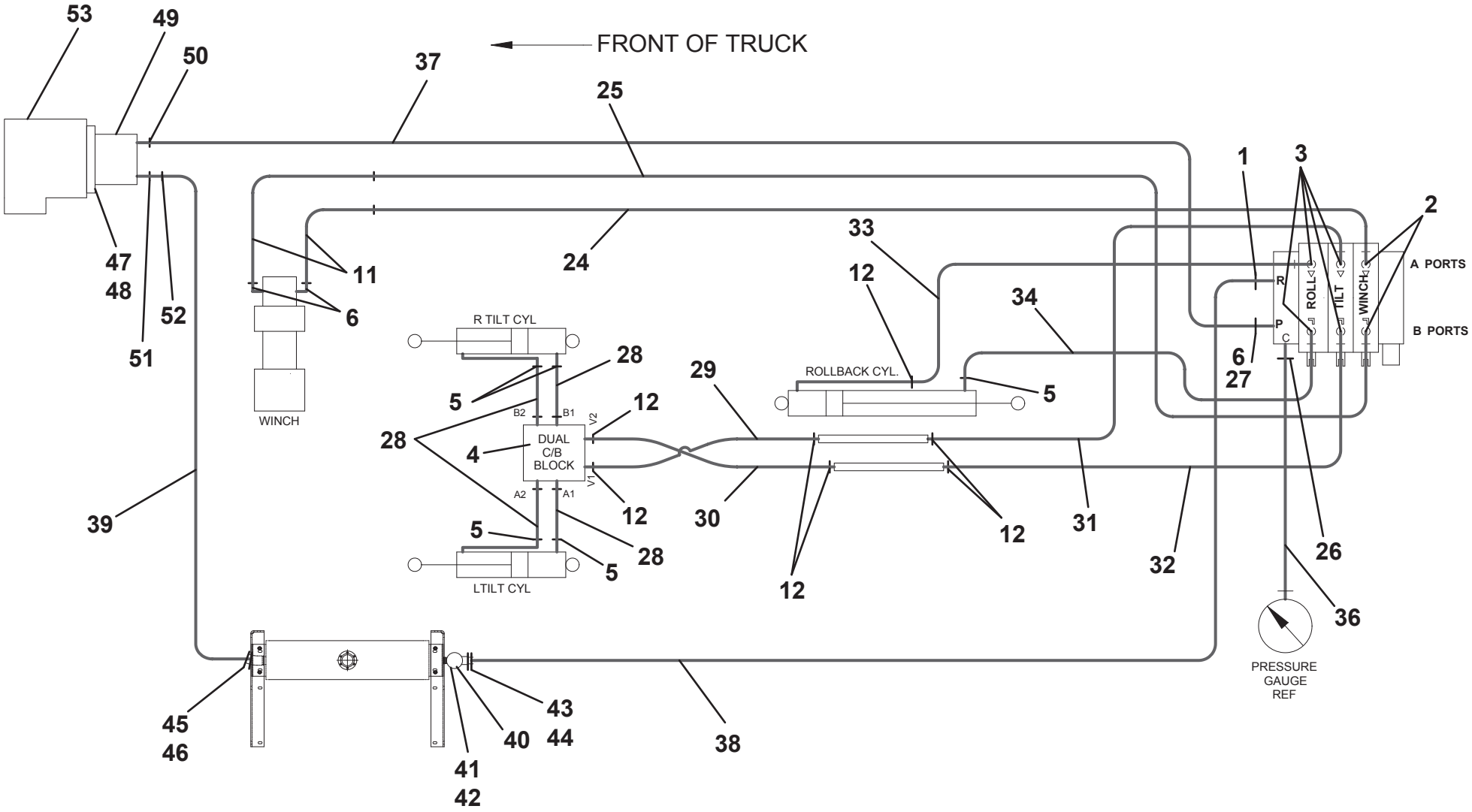

HYDRAULIC COMPONENTS - STANDARD

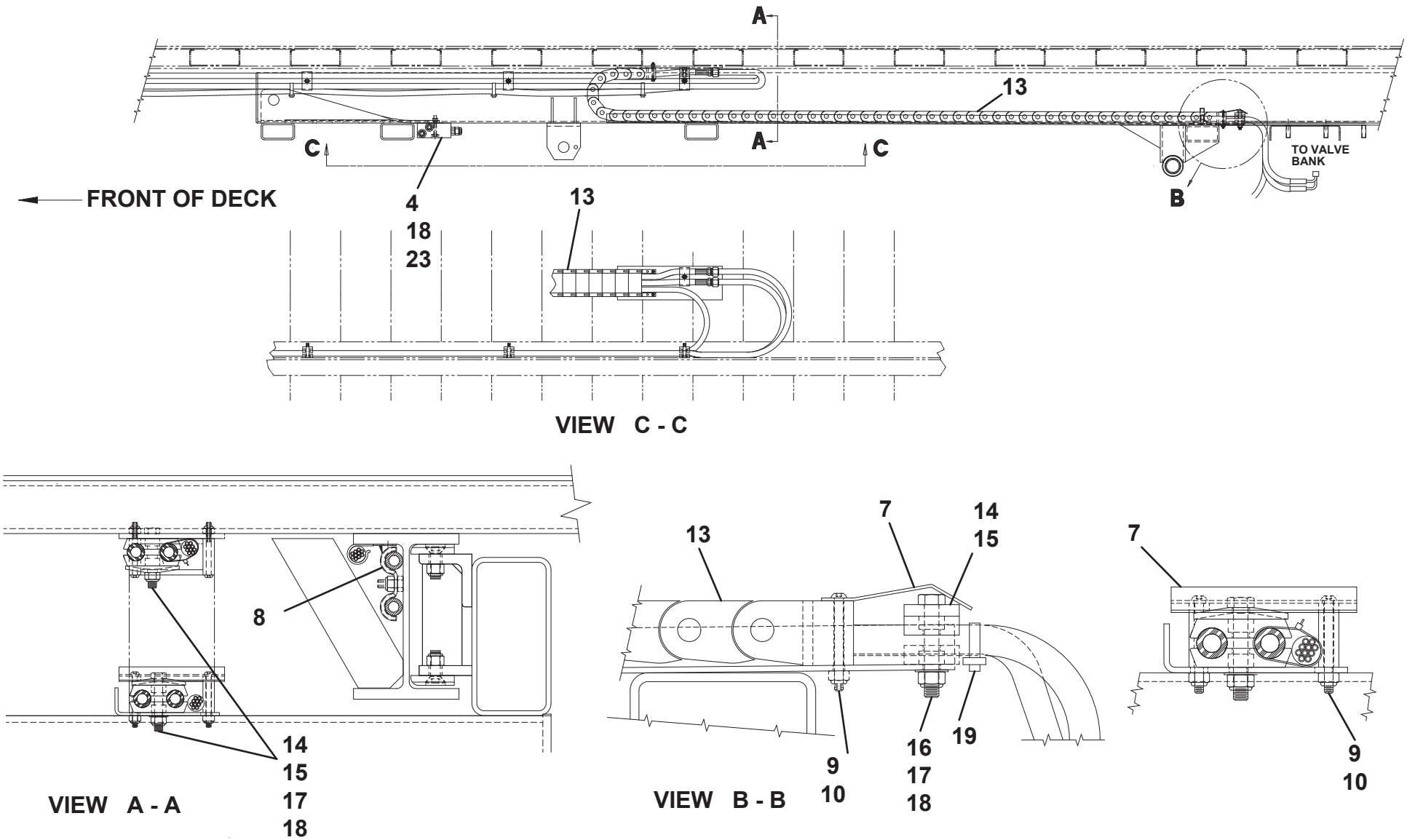

THIS PAGE INTENTIONALLY LEFT BLANK

HYDRAULIC COMPONENTS - HOSE ROUTING (STD IHC)

ITEM	PART NO.	DESCRIPTION	QTY
1	7274000076	Clamp	1
2	7785152420	Screw, 0.31"-18 x 1.50"	1
3	7660152601	Locknut, 0.31"-18NC	2
4	7115151050	Capscrew, 0.31"-18NC x 1.25"	1
5	7950150161	Flatwasher, 0.31" ID	1
6	7274000040	Clamp, 0.81"	1
7	7274000041	Clamp, 1.25"	1
8	7274000042	Clamp, 1.75"	1
9	4706003844	Plate	1
10	7115151064	Bolt, 0.31"-18NC x 1.25"	1

* Quantity varies depending on deck length and deck type.

HYDRAULIC COMPONENTS - HOSE ROUTING (STD IHC)

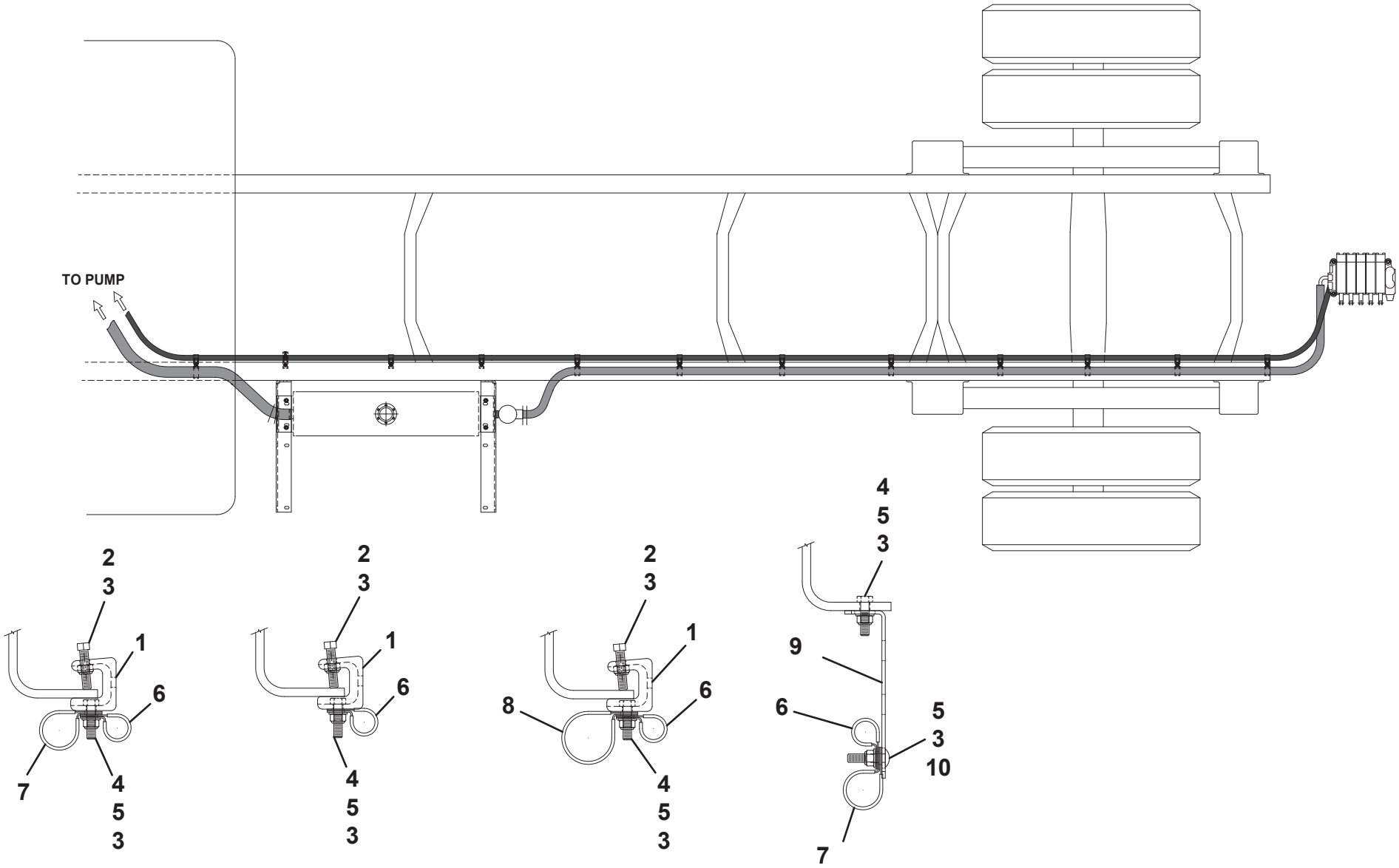

HYDRAULIC COMPONENTS - HOSE ROUTING (STD CAB IHC 144CA)

ITEM	PART NO.	DESCRIPTION	QTY
1	7274000076	Cast Frame Clamp	*
2	7785152420	Set Screw, 0.31”-18NC x 1.50”	*
3	7660152601	Locknut, 0.31”-18NC	*
4	7115151050	Capscrew, 0.31”-18NC x 1.25”	*
5	7950150161	Flatwasher, 0.31” ID	*
6	7274000040	Clamp	*
7	7274000041	Clamp	*
8	7274000042	Clamp	*
9	4706003844	Plate	*
10	7115151064	Carriage Bolt, 0.31”-18NC x 1.25”	*

* Quantity varies depending on deck length and deck type.

HYDRAULIC COMPONENTS - HOSE ROUTING (STD CAB IHC 144CA)

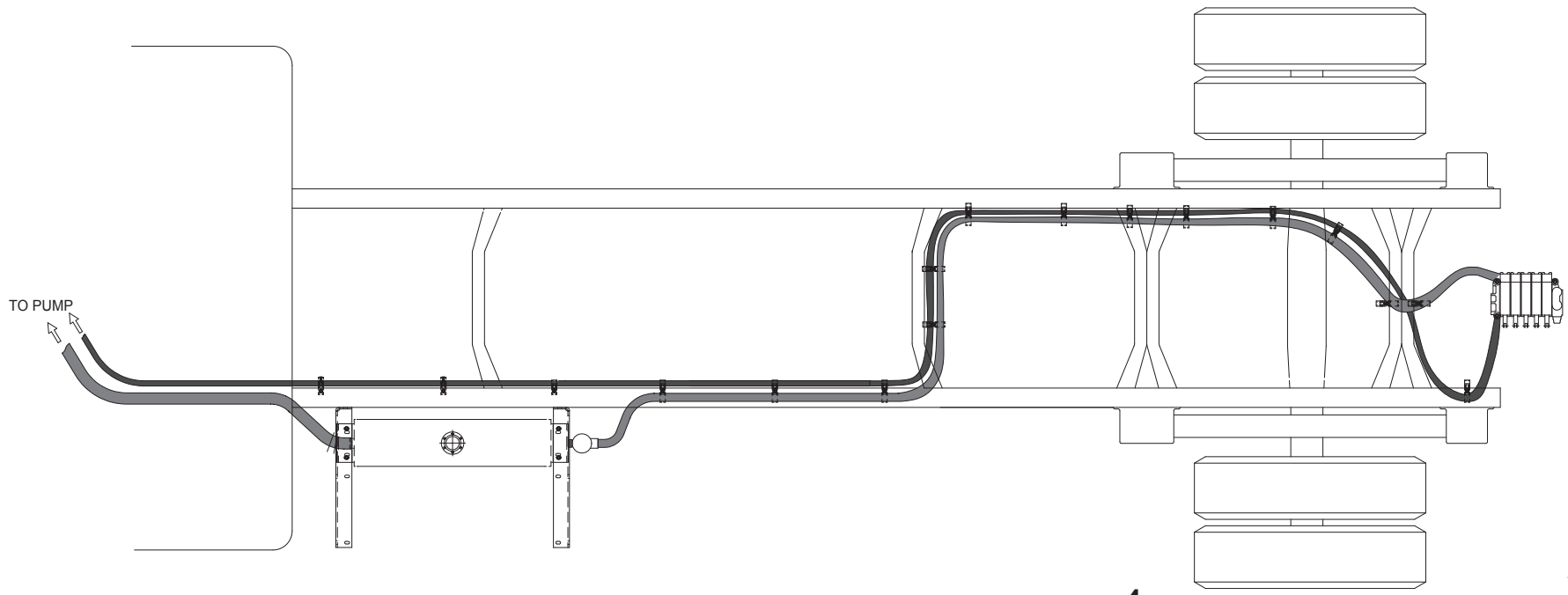

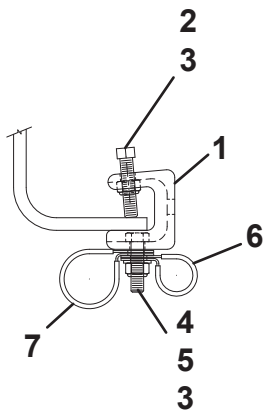

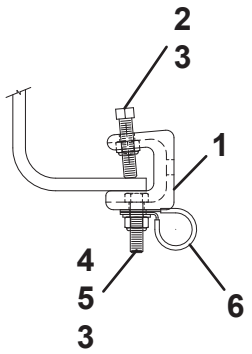

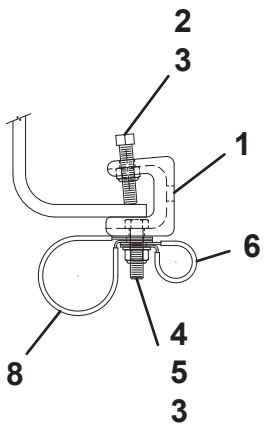

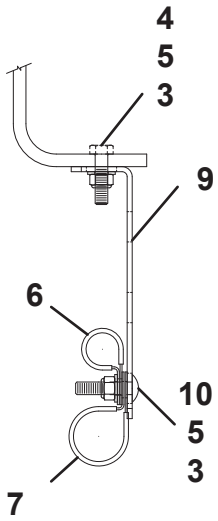

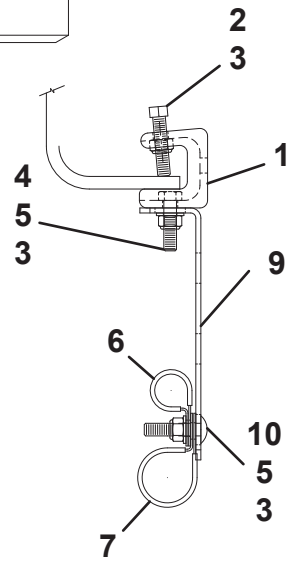

HYDRAULIC COMPONENTS - HOSE ROUTING (EXT CAB IHC 150CA)

ITEM	PART NO.	DESCRIPTION	QTY
1	7274000076	Cast Frame Clamp	*
2	7785152420	Set Screw, 0.31”-18NC x 1.50”	*
3	7660152601	Locknut, 0.31”-18NC	*
4	7115151050	Capscrew, 0.31”-18NC x 1.25”	*
5	7950150161	Flatwasher, 0.31” ID	*
6	7274000040	Clamp	*
7	7274000041	Clamp	*
8	7274000042	Clamp	*
9	4706003844	Plate	*
10	7115151064	Carriage Bolt, 0.31”-18NC x 1.25”	*

* Quantity varies depending on deck length and deck type.

HYDRAULIC COMPONENTS - HOSE ROUTING (EXT CAB IHC 150CA)

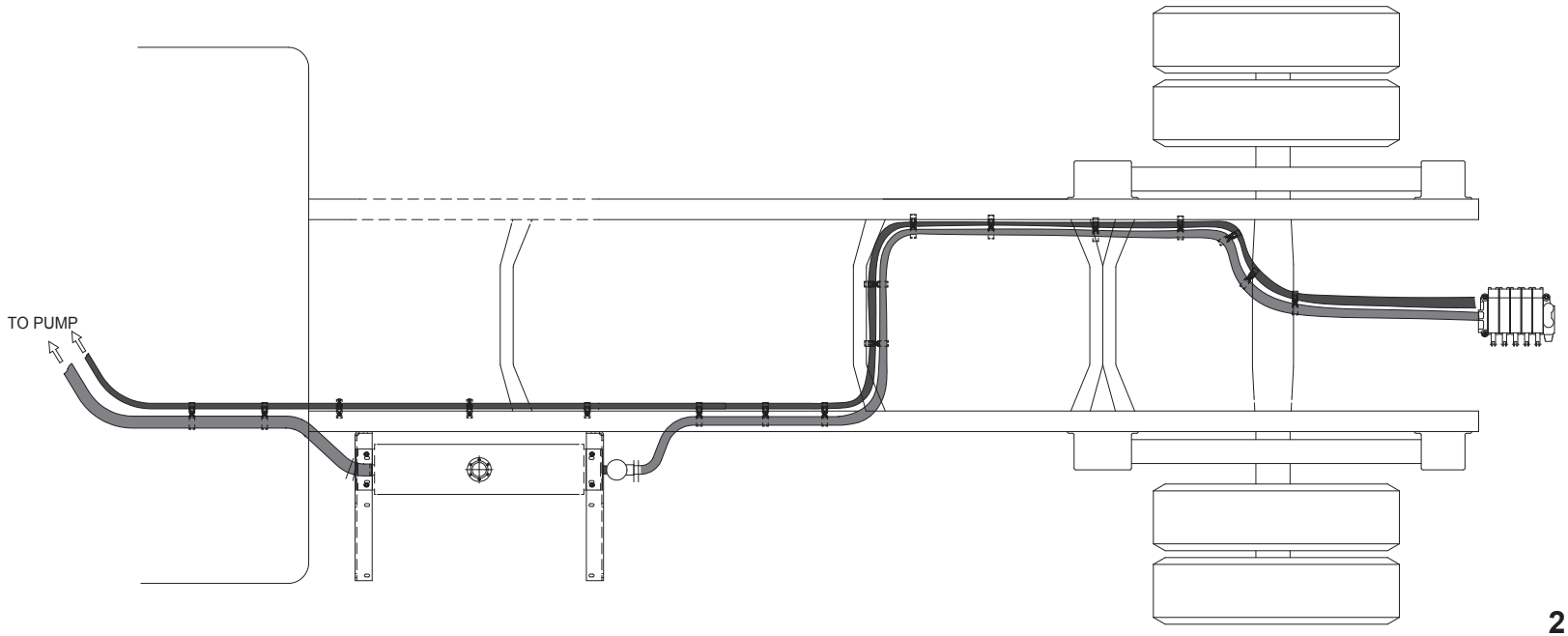

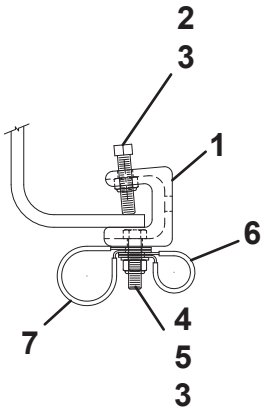

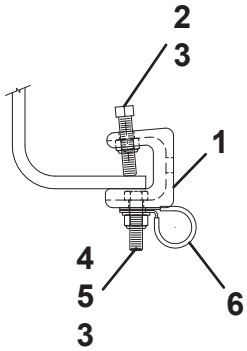

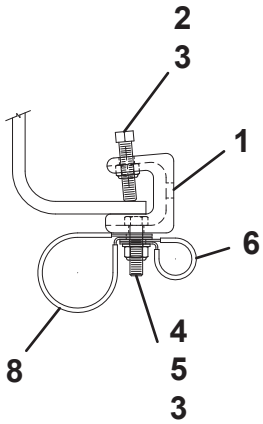

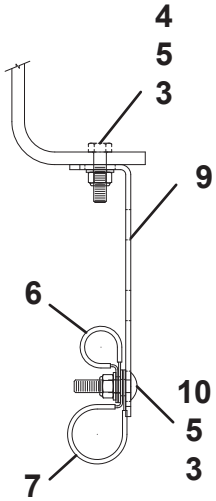

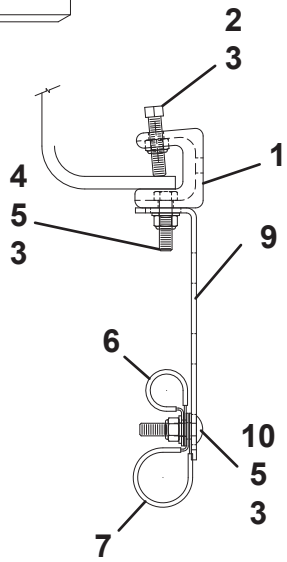

HYDRAULIC COMPONENTS - HOSE ROUTING (FORD STD CAB)

ITEM	PART NO.	DESCRIPTION	QTY
1	7274000076	Clamp	*
2	7785152420	Screw, 0.31"-18 x 1.50"	*
3	7660152601	Locknut, 0.31"-18NC	*
4	7115151050	Capscrew, 0.31"-18NC x 1.25"	*
5	7950150161	Flatwasher, 0.31" ID	*
6	7274000040	Clamp, 0.81"	*
7	7274000041	Clamp, 1.25"	*
8	7274000042	Clamp, 1.75"	*
9	4706003844	Plate	*
10	7115151064	Bolt, 0.31"-18NC x 1.25"	*

* Quantity varies depending on deck length and deck type.

HYDRAULIC COMPONENTS - HOSE ROUTING (FORD STD CAB)

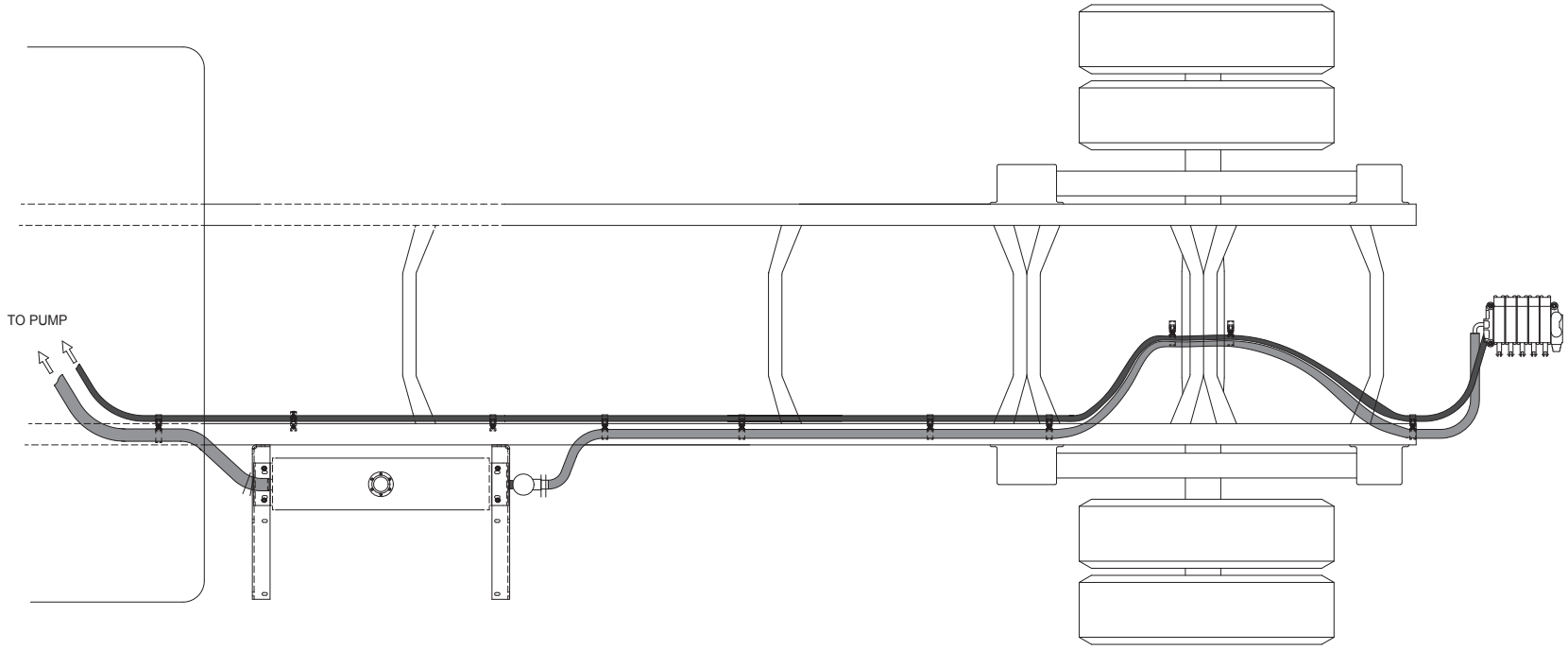

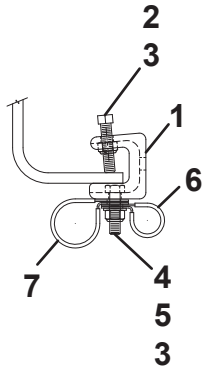

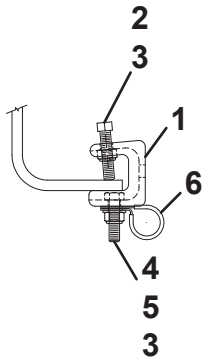

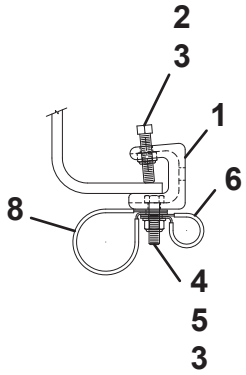

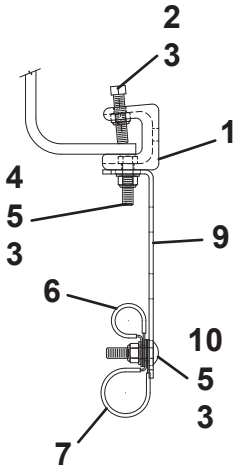

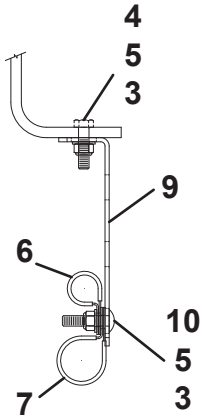

HYDRAULIC COMPONENTS - HOSE ROUTING (FORD EXT CAB 150CA)

ITEM	PART NO.	DESCRIPTION	QTY
1	7274000076	Clamp	*
2	7785152420	Screw, 0.31"-18 x 1.50"	*
3	7660152601	Locknut, 0.31"-18NC	*
4	7115151050	Capscrew, 0.31"-18NC x 1.25"	*
5	7950150161	Flatwasher, 0.31" ID	*
6	7274000040	Clamp, 0.81"	*
7	7274000041	Clamp, 1.25"	*
8	7274000042	Clamp, 1.75"	*
9	4706003844	Plate	*
10	7115151064	Bolt, 0.31"-18NC x 1.25"	*

* Quantity varies depending on deck length and deck type.

HYDRAULIC COMPONENTS - HOSE ROUTING (FORD EXT CAB 150CA)

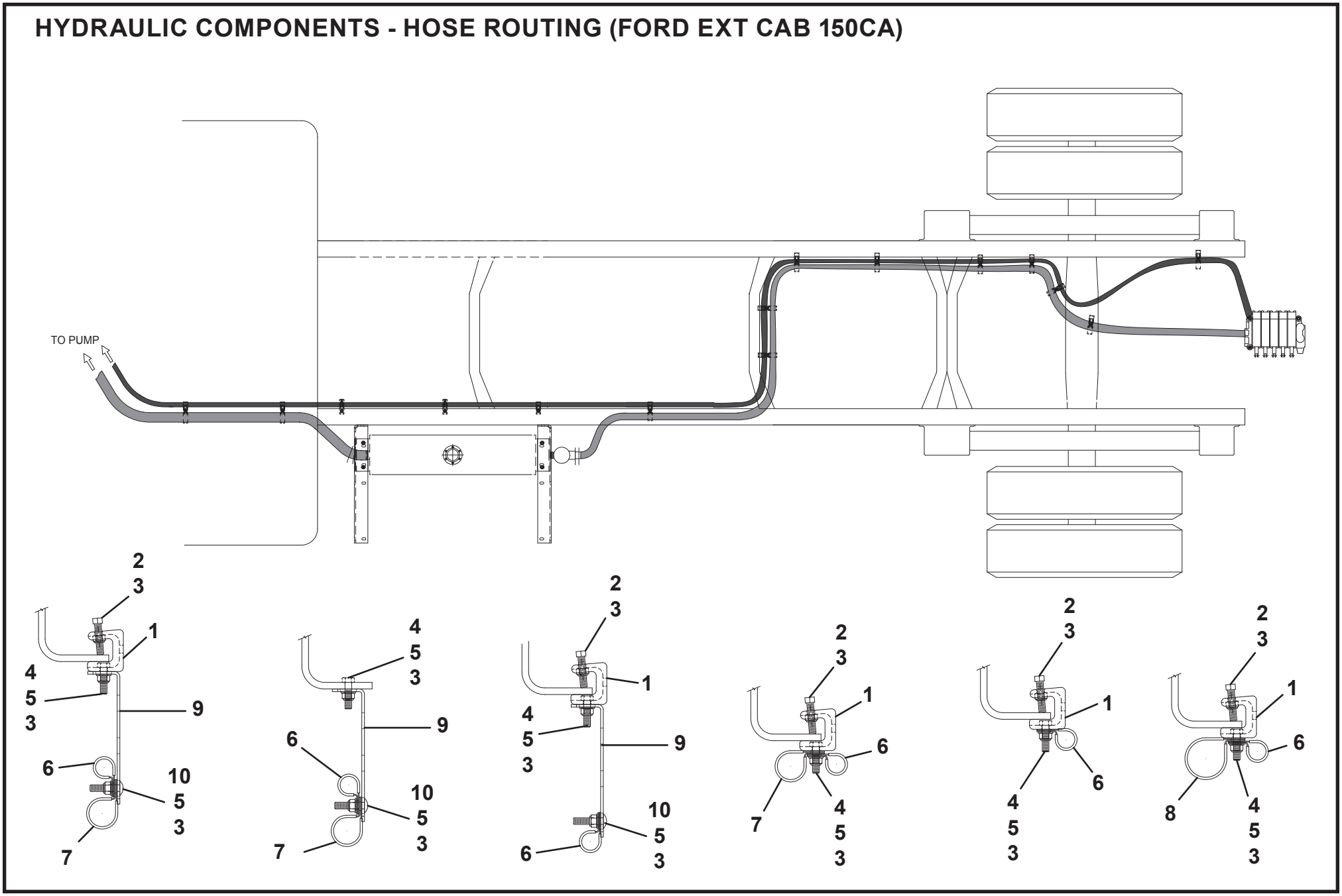

HYDRAULIC COMPONENTS - HOSE ROUTING (HINO)

ITEM	PART NO.	DESCRIPTION	QTY
1	7274000076	Clamp	*
2	7785152420	Screw, 0.31"-18 x 1.50"	*
3	7660152601	Locknut, 0.31"-18NC	*
4	7115151050	Capscrew, 0.31"-18NC x 1.25"	*
5	7950150161	Flatwasher, 0.31" ID	*
6	7274000040	Clamp, 0.81"	*
7	7274000041	Clamp, 1.25"	*
8	7274000042	Clamp, 1.75"	*

* Quantity varies depending on deck length and deck type.

HYDRAULIC COMPONENTS - HOSE ROUTING (HINO)

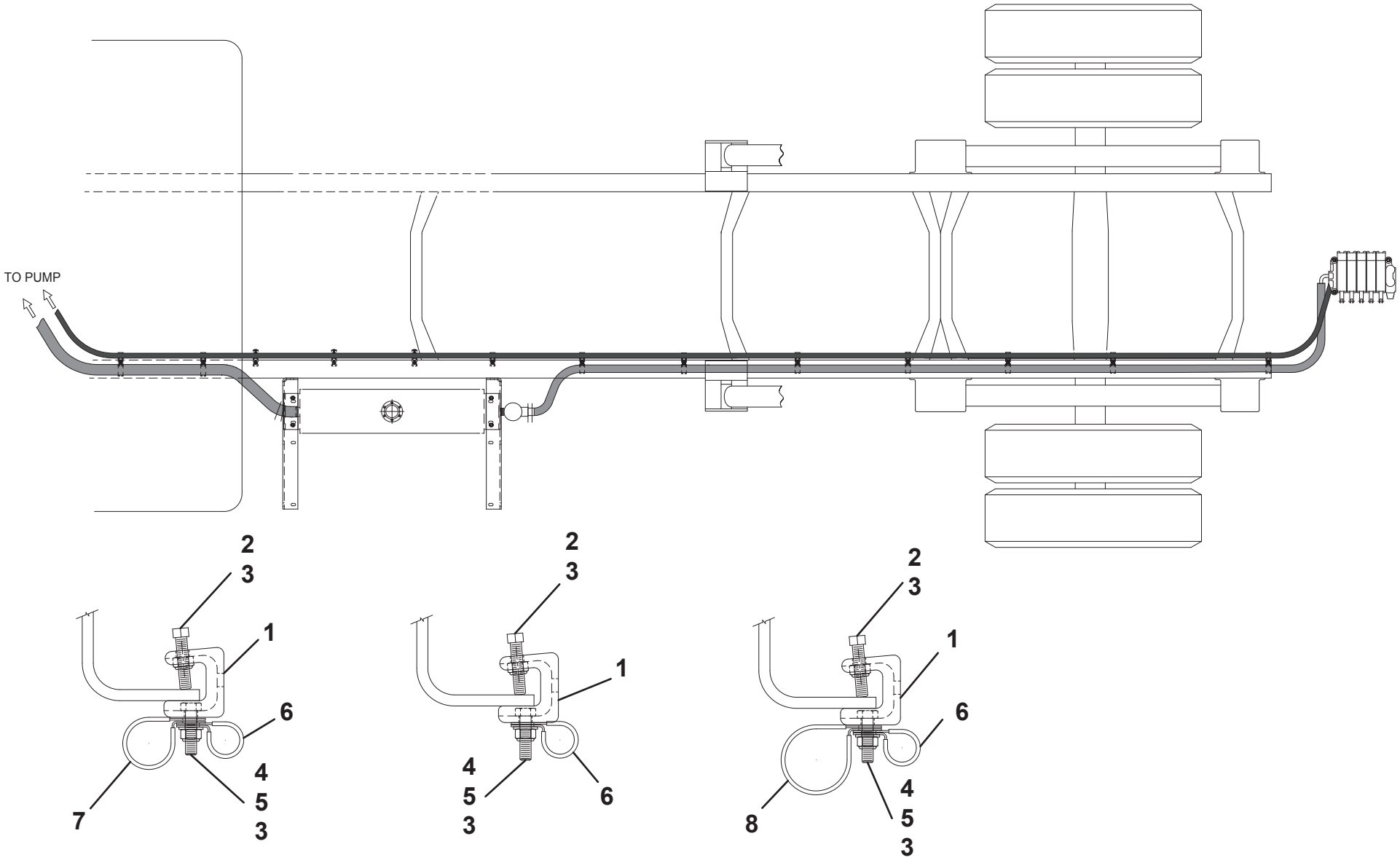

HYDRAULIC COMPONENTS - HOSE ROUTING (FREIGHTLINER)

ITEM	PART NO.	DESCRIPTION	QTY
1	7274000076	Clamp	*
2	7785152420	Screw, 0.31"-18 x 1.50"	*
3	7660152601	Locknut, 0.31"-18NC	*
4	7115151050	Capscrew, 0.31"-18NC x 1.25"	*
5	7950150161	Flatwasher, 0.31" ID	*
6	7274000040	Clamp, 0.81"	*
7	7274000041	Clamp, 1.25"	*
8	7274000042	Clamp, 1.75"	*
9	4706003844	Plate	*
10	7115151064	Bolt, 0.31"-18NC x 1.25"	*

* Quantity varies depending on deck length and deck type.

HYDRAULIC COMPONENTS - HOSE ROUTING (FREIGHTLINER)

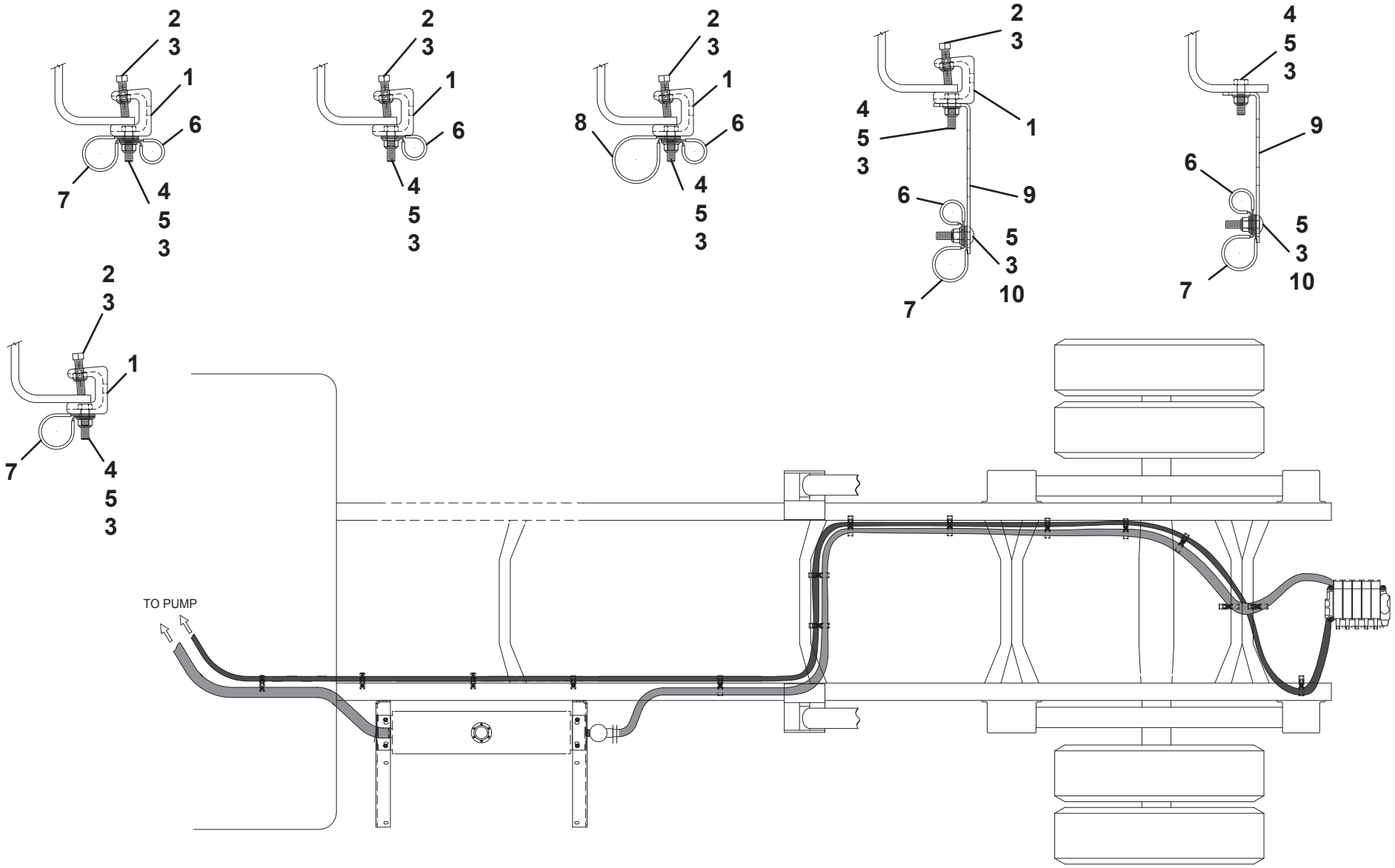

HYDRAULIC COMPONENTS - HOSE ROUTING (PETERBILT)

ITEM	PART NO.	DESCRIPTION	QTY
1	7274000076	Clamp	*
2	7785152420	Screw, 0.31"-18 x 1.50"	*
3	7660152601	Locknut, 0.31"-18NC	*
4	7115151050	Capscrew, 0.31"-18NC x 1.25"	*
5	7950150161	Flatwasher, 0.31" ID	*
6	7274000040	Clamp, 0.81"	*
7	7274000041	Clamp, 1.25"	*
8	7274000042	Clamp, 1.75"	*
9	4706003844	Plate	*
10	7115151064	Bolt, 0.31"-18NC x 1.25"	*

* Quantity varies depending on deck length and deck type.

HYDRAULIC COMPONENTS - HOSE ROUTING (PETERBILT)

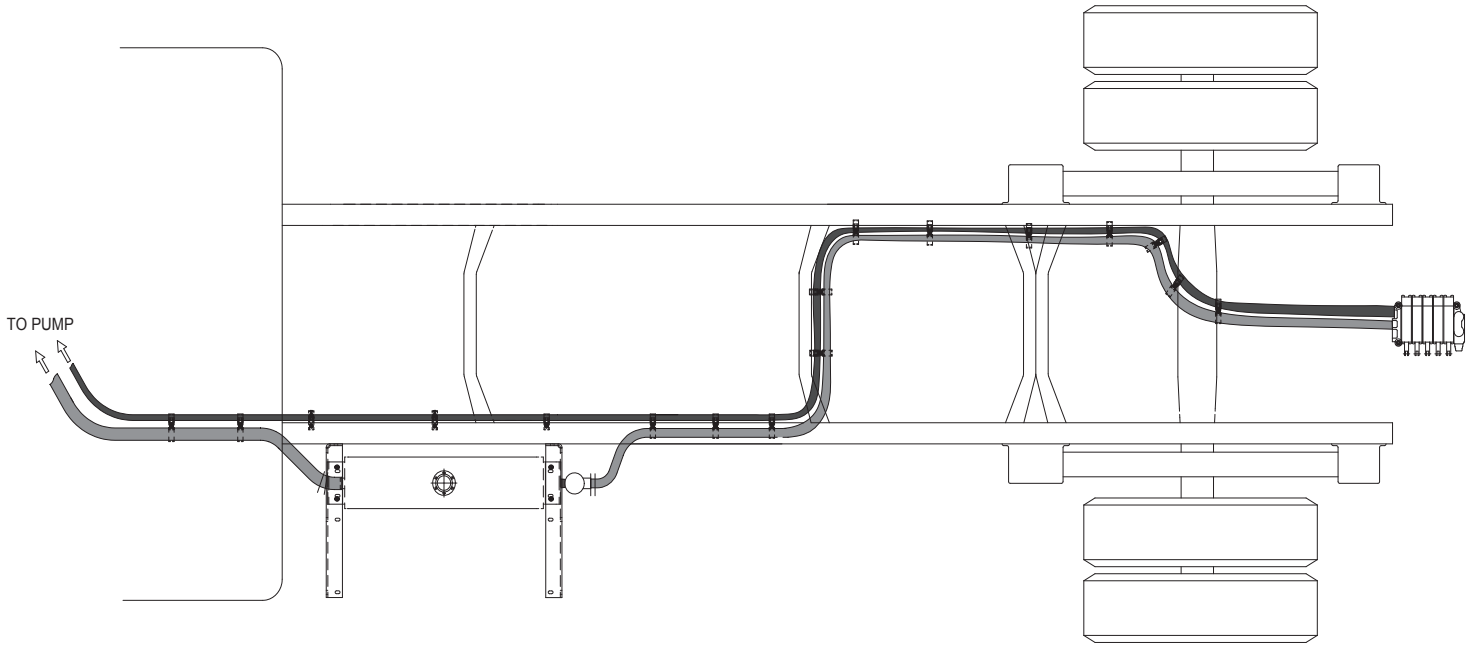

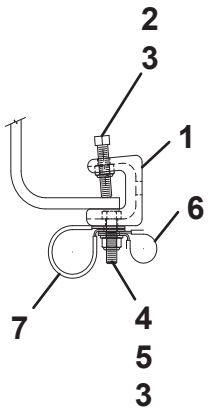

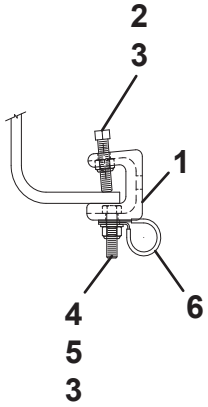

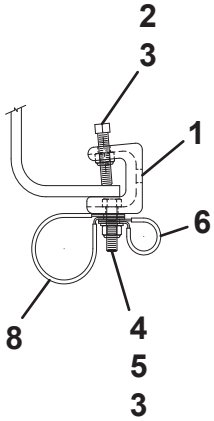

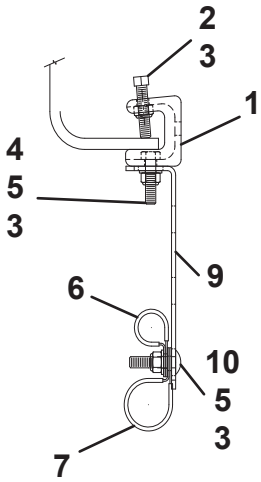

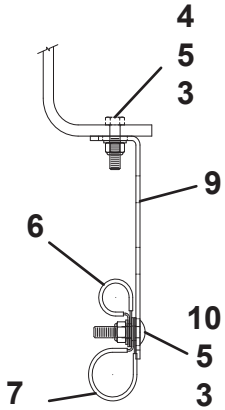

HYDRAULIC COMPONENTS - HOSE ROUTING (CHEVY/GMC)

ITEM	PART NO.	DESCRIPTION	QTY
1	7274000076	Cast Frame Clamp	*
2	7785152420	Set Screw, 0.31”-18NC x 1.50”	*
3	7660152601	Locknut, 0.31”-18NC	*
4	7115151050	Capscrew, 0.31”-18NC x 1.25”	*
5	7950150161	Flatwasher, 0.31” ID	*
6	7274000040	Clamp	*
7	7274000041	Clamp	*
8	7274000042	Clamp	*
9	4706003844	Plate	*
10	7115151064	Carriage Bolt, 0.31”-18NC x 1.25”	*

* Quantity varies depending on deck length and deck type.

HYDRAULIC COMPONENTS - HOSE ROUTING (CHEVY/GMC)

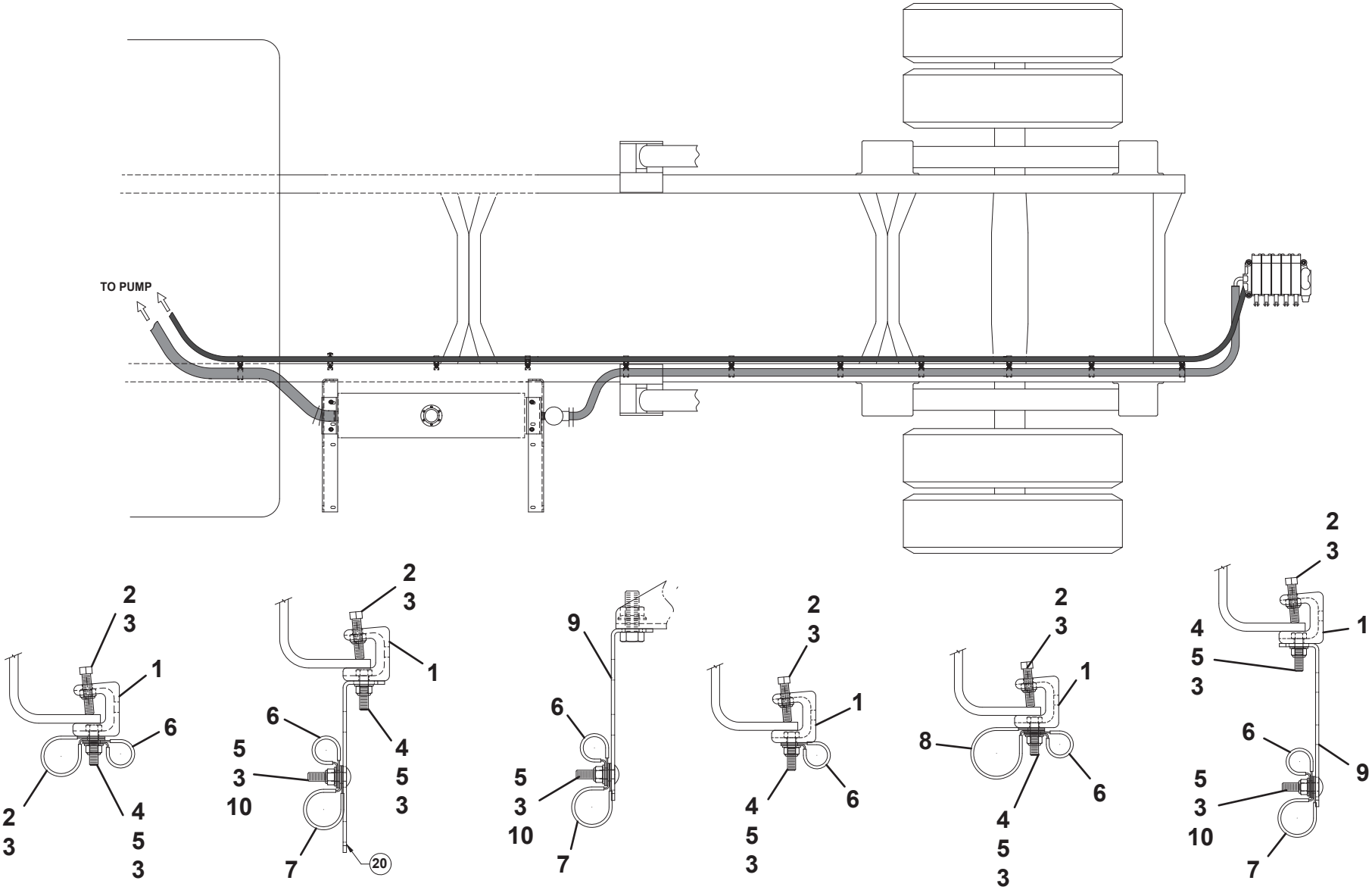

HYDRAULIC COMPONENTS - HOSE ROUTING (DODGE)

ITEM	PART NO.	DESCRIPTION	QTY
1	7274000076	Clamp	*
2	7785152420	Screw, 0.31"-18 x 1.50"	*
3	7660152601	Locknut, 0.31"-18NC	*
4	7115151050	Capscrew, 0.31"-18NC x 1.25"	*
5	7950150161	Flatwasher, 0.31" ID	*
6	7274000040	Clamp, 0.81"	*
7	7274000041	Clamp, 1.25"	*
8	7274000042	Clamp, 1.75"	*
9	4706003844	Plate	*
10	7115151064	Bolt, 0.31"-18NC x 1.25"	*

* Quantity varies depending on deck length and deck type.

HYDRAULIC COMPONENTS - HOSE ROUTING (DODGE)

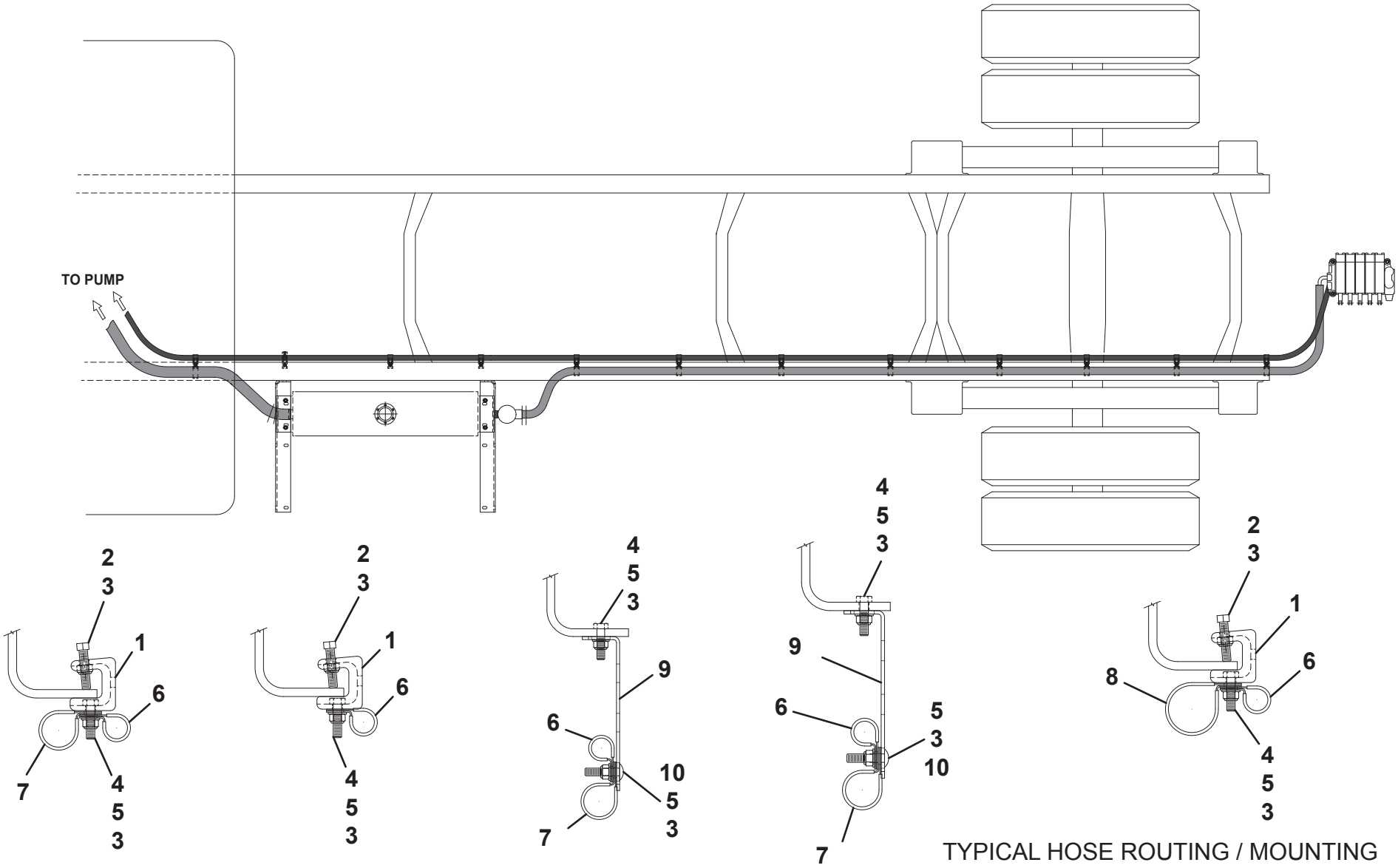

TYPICAL HOSE ROUTING / MOUNTING

HYDRAULIC COMPONENTS - HOSE ROUTING (STD UD)

ITEM	PART NO.	DESCRIPTION	QTY
1	7274000076	Clamp	*
2	7785152420	Screw, 0.31"-18 x 1.50"	*
3	7660152601	Locknut, 0.31"-18NC	*
4	7115151050	Capscrew, 0.31"-18NC x 1.25"	*
5	7950150161	Flatwasher, 0.31" ID	*
6	7274000040	Clamp, 0.81"	*
7	7274000041	Clamp, 1.25"	*
8	4706003844	Plate	*
9	7115151064	Bolt, 0.31"-18NC x 1.25"	*

* Quantity varies depending on deck length and deck type.

HYDRAULIC COMPONENTS - HOSE ROUTING (STD UD)

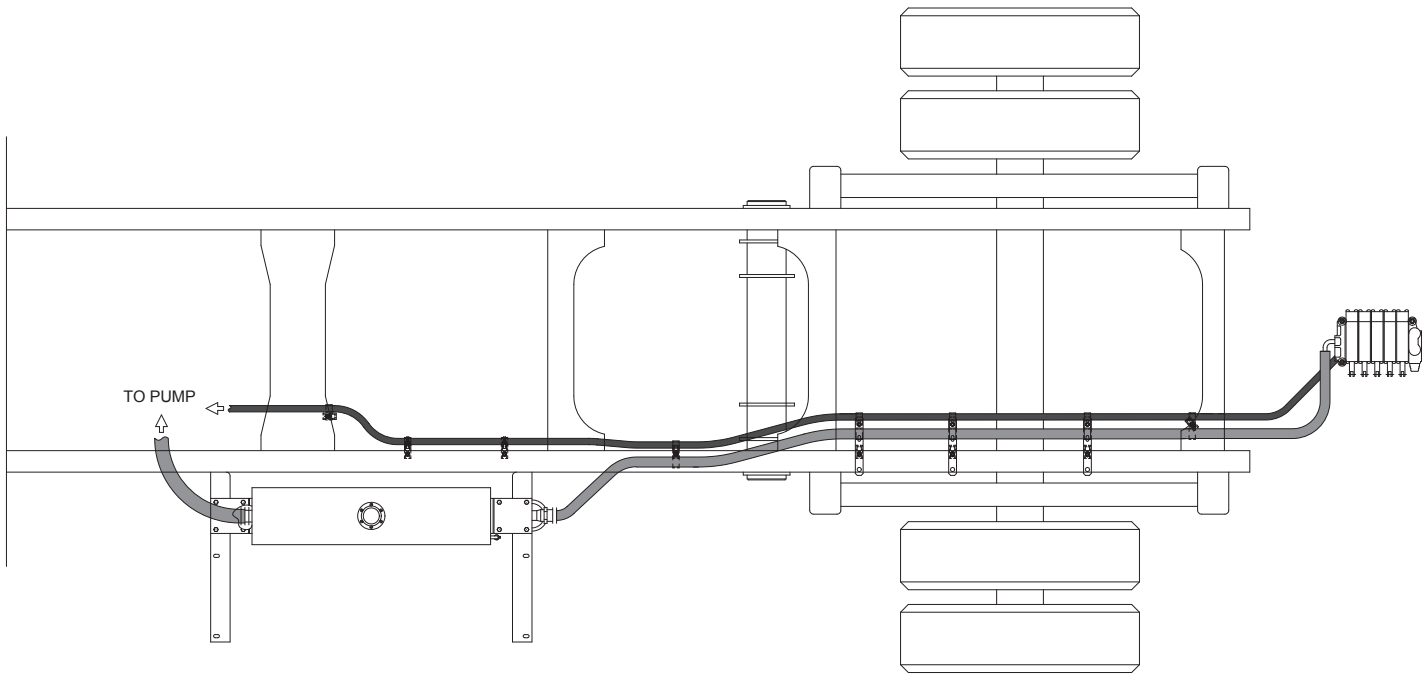

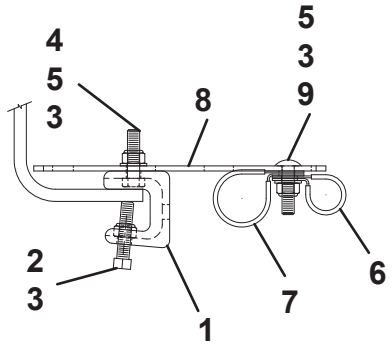

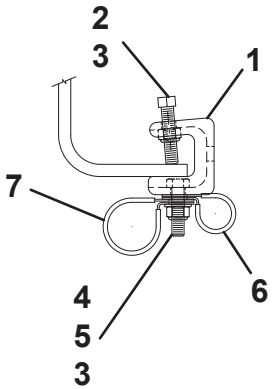

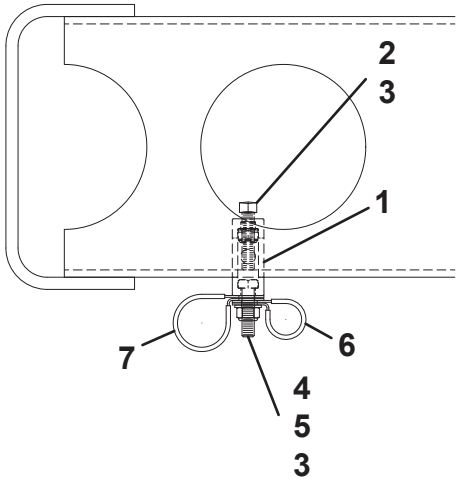

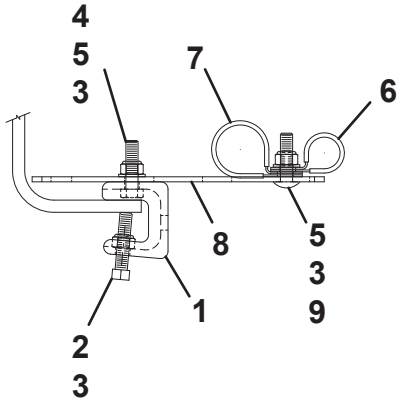

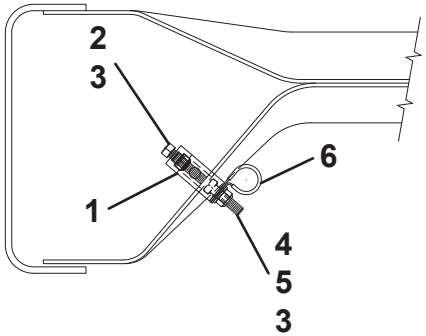

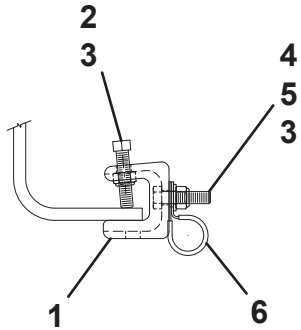

HYDRAULIC COMPONENTS - IRL WHEEL LIFT WITH MANUAL GRIDS

ITEM	PART NO.	DESCRIPTION	QTY
1	7445040843	Adapter	2
2	7935000305	Counter Balance	2
3	7443000129	Reducer	2
4	7445060645	Elbow	4
5	7445060648	Tee	4
6	7445040446	Elbow	2
7	5526000553	Tie Straps	12
8	4567122032	Hose Assembly	2
9	4567123034	Hose Assembly	2
10	4567110032	Hose Assembly	2
11	4567122014	Hose Assembly	2

* also available in Hose Kit, P/N 4577000002

HYDRAULIC COMPONENTS - IRL WHEEL LIFT WITH MANUAL GRIDS

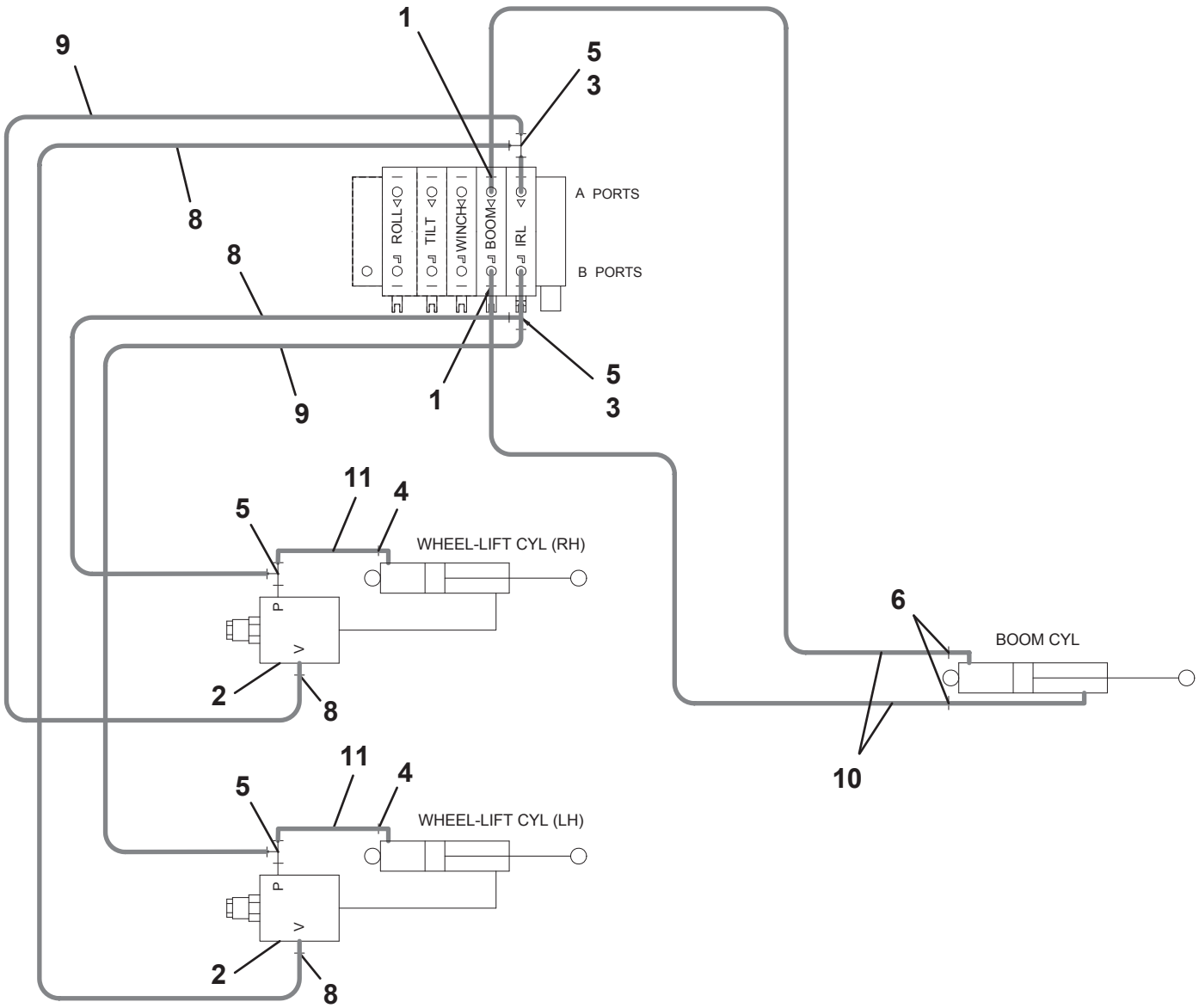

HYDRAULIC COMPONENTS - IRL WHEEL LIFT WITH HYDRAULIC GRIDS

ITEM	PART NO.	DESCRIPTION	QTY
1	7443000129	Reducer	2
2	7445060648	Tee	4
3	4567123034	Hose Assembly	2
4	4567122032	Hose Assembly	2
5	7935000305	Counterbalance Valve	2
6	7445060645	Elbow	4
7	4567122014	Hose Assembly (Manual Grids)	2
	4567122014	Hose Assembly (Hyd Grids - low frame)	
	4567122012	Hose Assembly (Hyd Grids - high frame)	
8	7445040843	Adapter	2
9	4567110032	Hose Assembly (Manual Grids)	2
	4567110042	Hose Assembly (Hyd Grids - low frame)	
	4567110038	Hose Assembly (Hyd Grids - high frame)	
10	7445040446	Elbow	2
11	7443040843	Adapter	2
12	4567110038	Hose Assembly (Manual Grids)	2
	4567110038	Hose Assembly (Hyd Grids - low frame)	
	4567110034	Hose Assembly (Hyd Grids - high frame)	
13	7445040445	Elbow	10
14	7912000237	Tube Assembly	2
15	4570000234	Hose Assembly	2
16	4619000013	Manifold	1
17	7445040443	Adapter	4
18	7912000184	Tube Assembly	4
19	4570000210	Hose Assembly	2
20	4570000211	Hose Assembly	2

HYDRAULIC COMPONENTS - IRL WHEEL LIFT WITH HYDRAULIC GRIDS

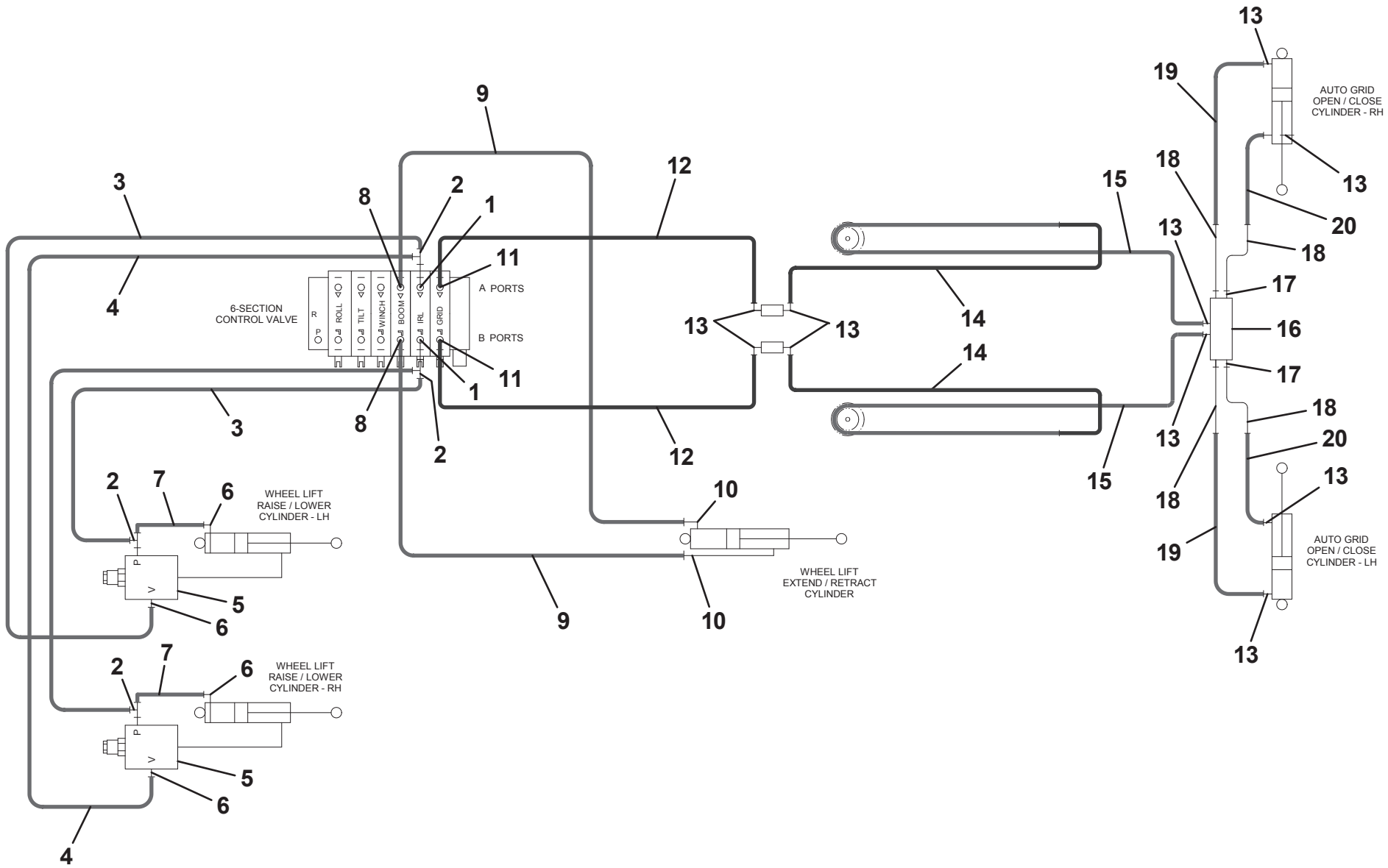

HYDRAULIC COMPONENTS - ZOD WHEEL LIFT WITH MANUAL GRIDS

ITEM	PART NO.	DESCRIPTION	QTY
1	7443000129	Reducer	2
2	7445060648	Tee	4
3	4567123034	Hose Assembly	2
4	4567122032	Hose Assembly	2
5	7935000305	Counterbalance Valve	2
6	7445060645	Elbow	4
7	4567122014	Hose Assembly	2
8	7445060843	Adapter	2
9	4567120025	Hose Assembly	2
10	7445060643	Adapter	4
11	7445040843	Adapter	2
12	4567110034	Hose Assembly	2
13	7445040446	Elbow	2

HYDRAULIC COMPONENTS - ZOD WHEEL LIFT WITH MANUAL GRIDS

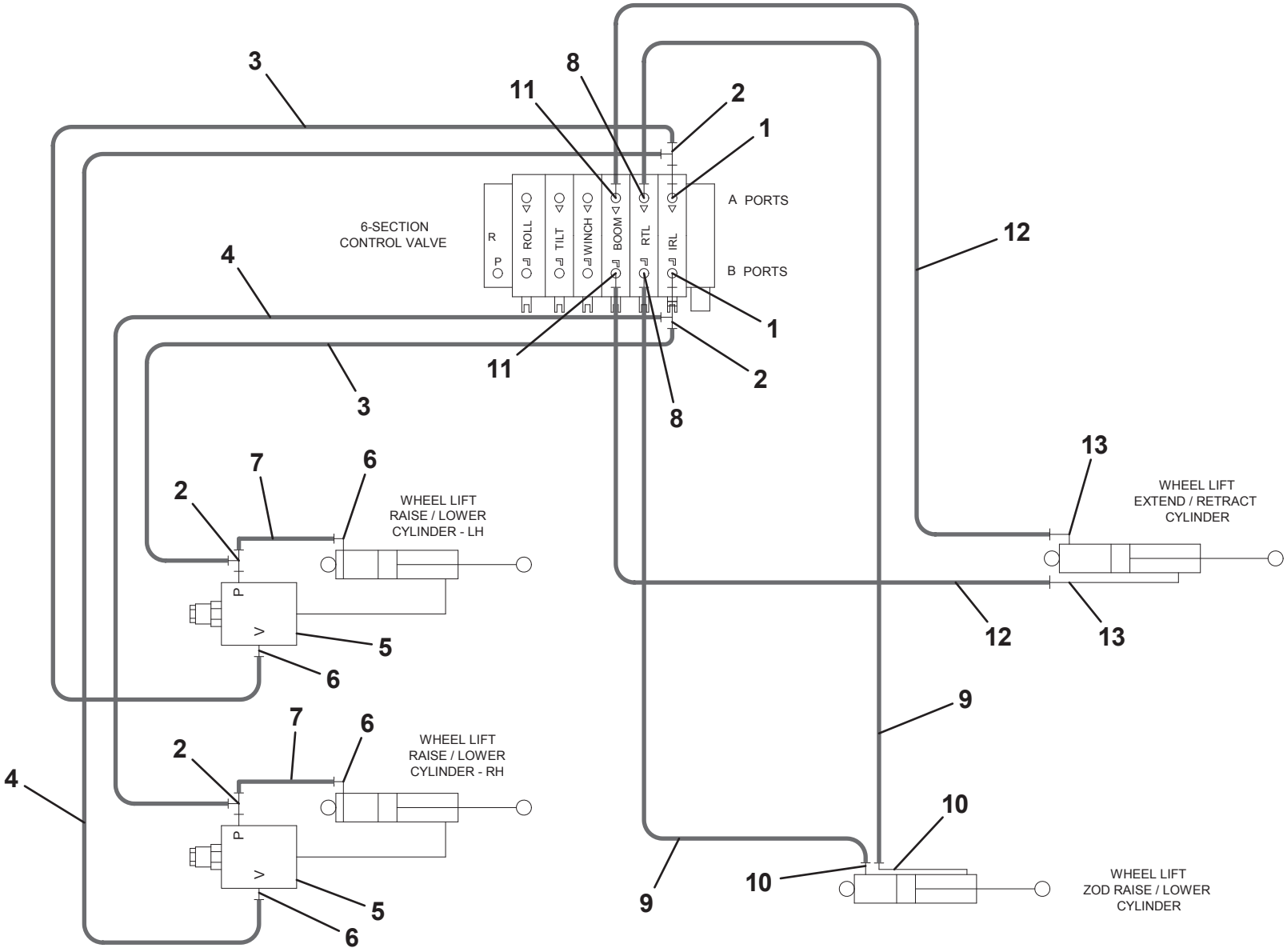

HYDRAULIC COMPONENTS - ZOD WHEEL LIFT WITH HYDRAULIC GRIDS

ITEM	PART NO.	DESCRIPTION	QTY
1	7443000129	Reducer	2
2	7445060648	Tee	4
3	4567123034	Hose Assembly	2
4	4567122032	Hose Assembly	2
5	7935000305	Counterbalance Valve	2
6	7445060645	Elbow	4
7	4567122014	Hose Assembly (Manual Grids)	2
	4567122014	Hose Assembly (Hyd Grids - low frame)	
	4567122012	Hose Assembly (Hyd Grids - high frame)	
8	7445060843	Adapter	2
9	4567120025	Hose Assembly	2
10	7443060643	Adapter	2
11	7445040843	Adapter	2
12	4567110032	Hose Assembly (Manual Grids)	2
	4567110042	Hose Assembly (Hyd Grids - low frame)	
	4567110038	Hose Assembly (Hyd Grids - high frame)	
13	7445040446	Elbow	2
14	7443040843	Adapter	2
15	4567110038	Hose Assembly (Manual Grids)	2
	4567110038	Hose Assembly (Hyd Grids - low frame)	
	4567110034	Hose Assembly (Hyd Grids - high frame)	
16	7445040445	Elbow	10
17	7912000237	Tube Assembly	2
18	4570000234	Hose Assembly	2
19	4619000013	Manifold	1
20	7445040443	Adapter	4
21	7912000184	Tube Assembly	4
22	4570000210	Hose Assembly	2
23	4570000211	Hose Assembly	2

HYDRAULIC COMPONENTS - ZOD WHEEL LIFT WITH HYDRAULIC GRIDS

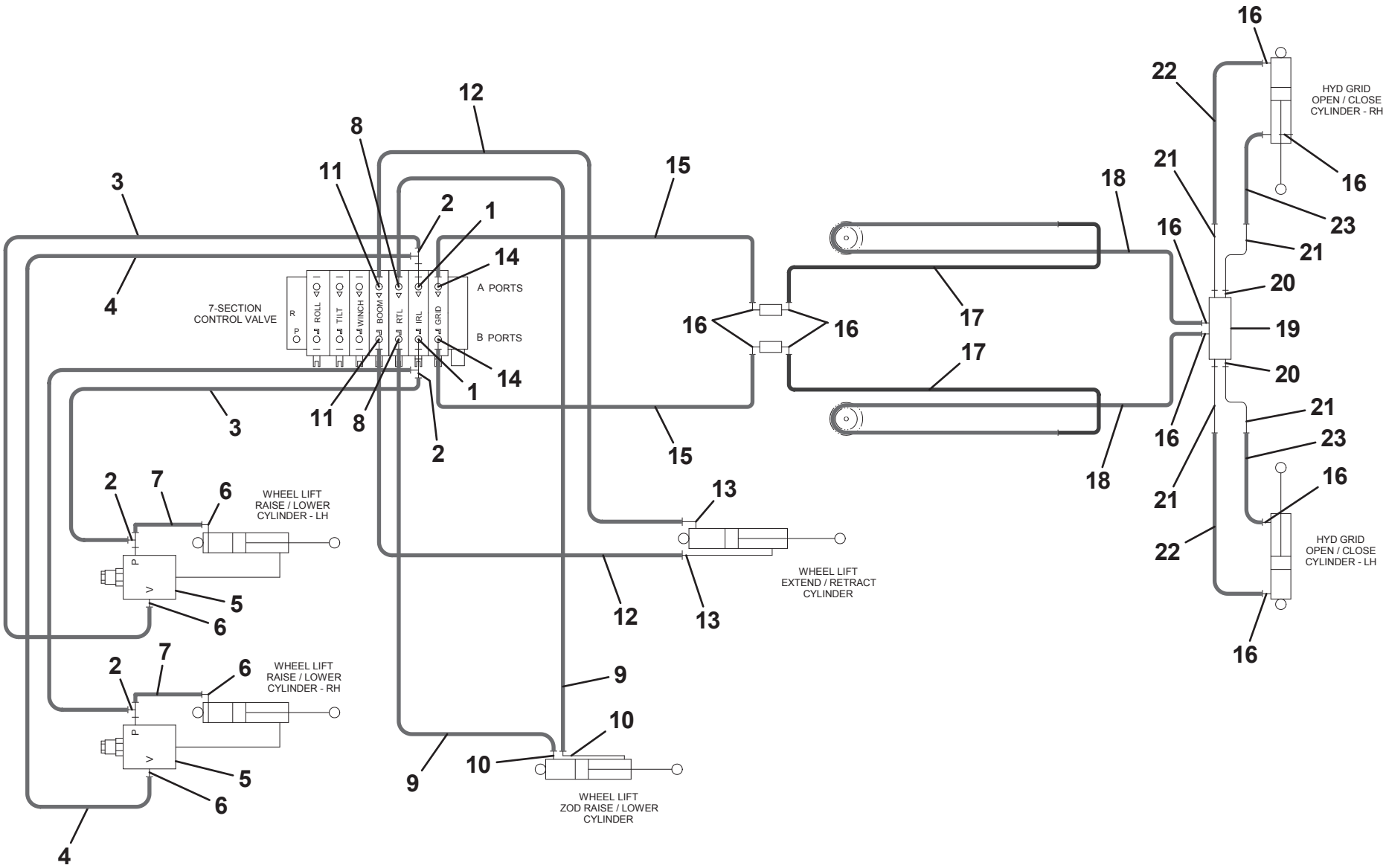

HYDRAULIC COMPONENTS - STABILIZER W/ REESE REC OR PINTLE HITCH

ITEM	PART NO.	DESCRIPTION	QTY
1	7445060845	Elbow	2
2	7443000030	Tee	2
3	4567122032	Hose Assembly	2
4	4567122050	Hose Assembly	2
5	7935000305	Counterbalance Valve	2
6	7445060648	Tee	2
7	7445060645	Elbow	4
8	4567122014	Hose Assembly	2

HYDRAULIC COMPONENTS - STABILIZER W/ REESE REC OR PINTLE HITCH

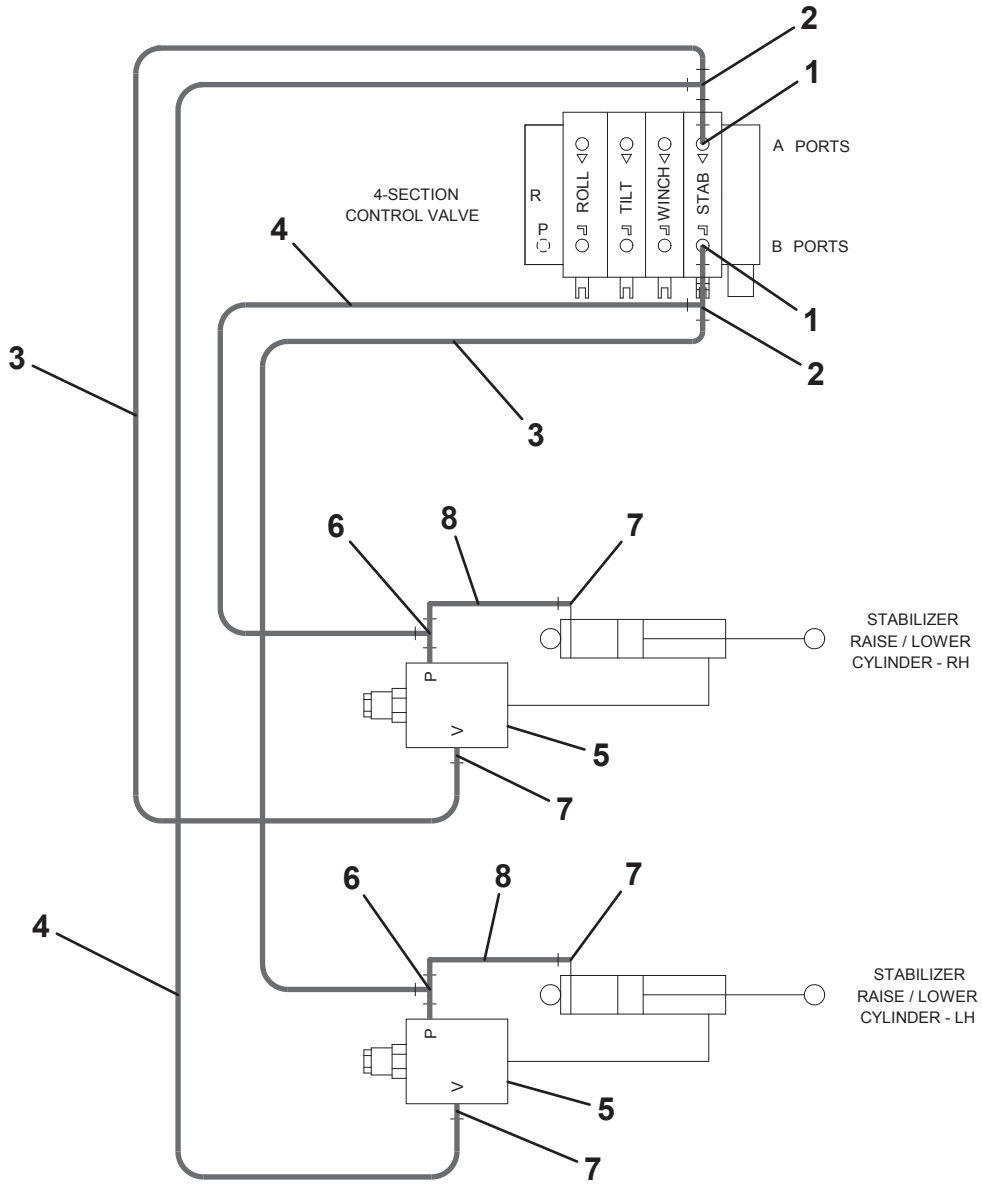

HYDRAULIC COMPONENTS - STABILIZER W/ HYD PINTLE HITCH MTG PLATE

ITEM	PART NO.	DESCRIPTION	QTY
1	7445060843	Adapter	2
2	7445060845	Elbow	2
3	7443000030	Tee	2
4	4567122032	Hose Assembly	2
5	4567122050	Hose Assembly	2
6	7935000305	Counterbalance Valve	2
7	7445060645	Elbow	4
8	7445060648	Tee	2
9	4567122014	Hose Assembly	2
10	4567120024	Hose Assembly	2
11	7445060643	Adapter	2

HYDRAULIC COMPONENTS - STABILIZER W/ HYD PINTLE HITCH MTG PLATE

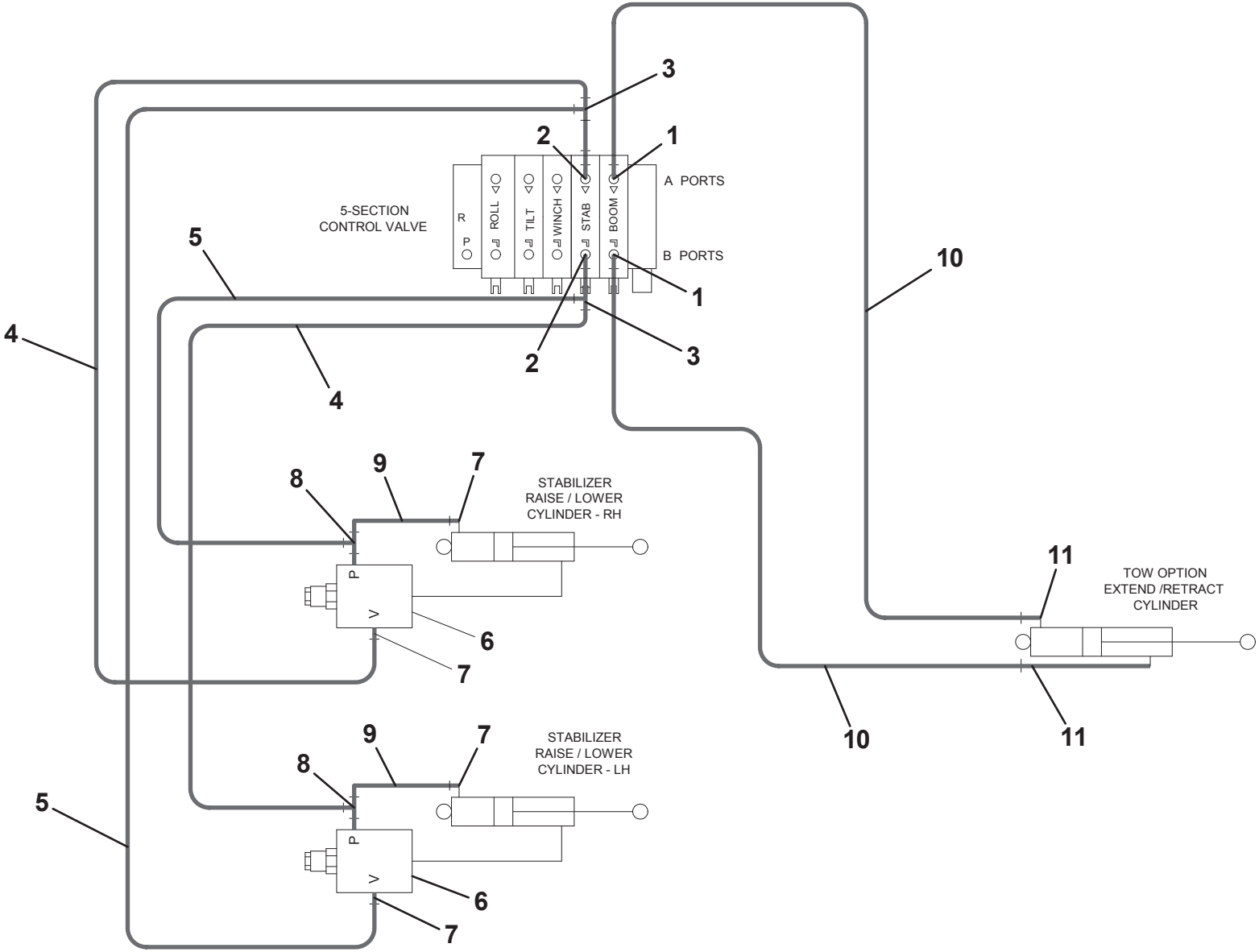

HYDRAULIC COMPONENTS - IRL TOW OPTION

ITEM	PART NO.	DESCRIPTION	QTY
1	7443000129	Reducer	2
2	7445060648	Tee	4
3	4567123034	Hose Assembly	2
4	4567122032	Hose Assembly	2
5	7935000305	Counterbalance Valve	2
6	7445060645	Elbow	4
7	4567122014	Hose Assembly	2
8	7445040843	Adapter	2
9	4567112042	Hose Assembly	2
10	7445040645	Elbow	2

HYDRAULIC COMPONENTS - IRL TOW OPTION

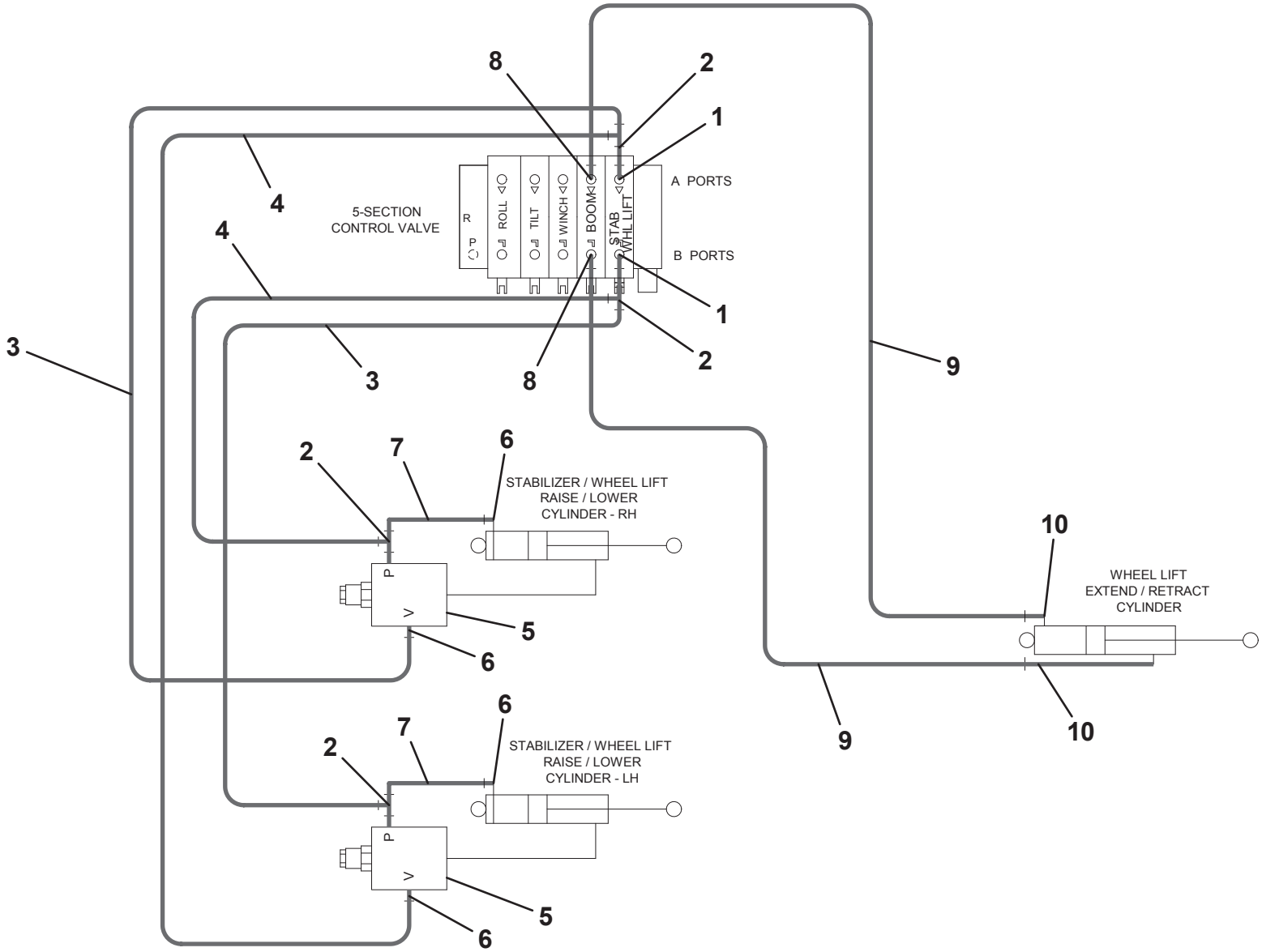

HYDRAULIC COMPONENTS - HYDRAULIC EXTEND TOW OPTION

ITEM	PART NO.	DESCRIPTION	QTY
1	7445040843	Adapter	2
2	4567112042	Hose Assembly	2
3	7445040645	Elbow	2

HYDRAULIC COMPONENTS - HYDRAULIC EXTEND TOW OPTION

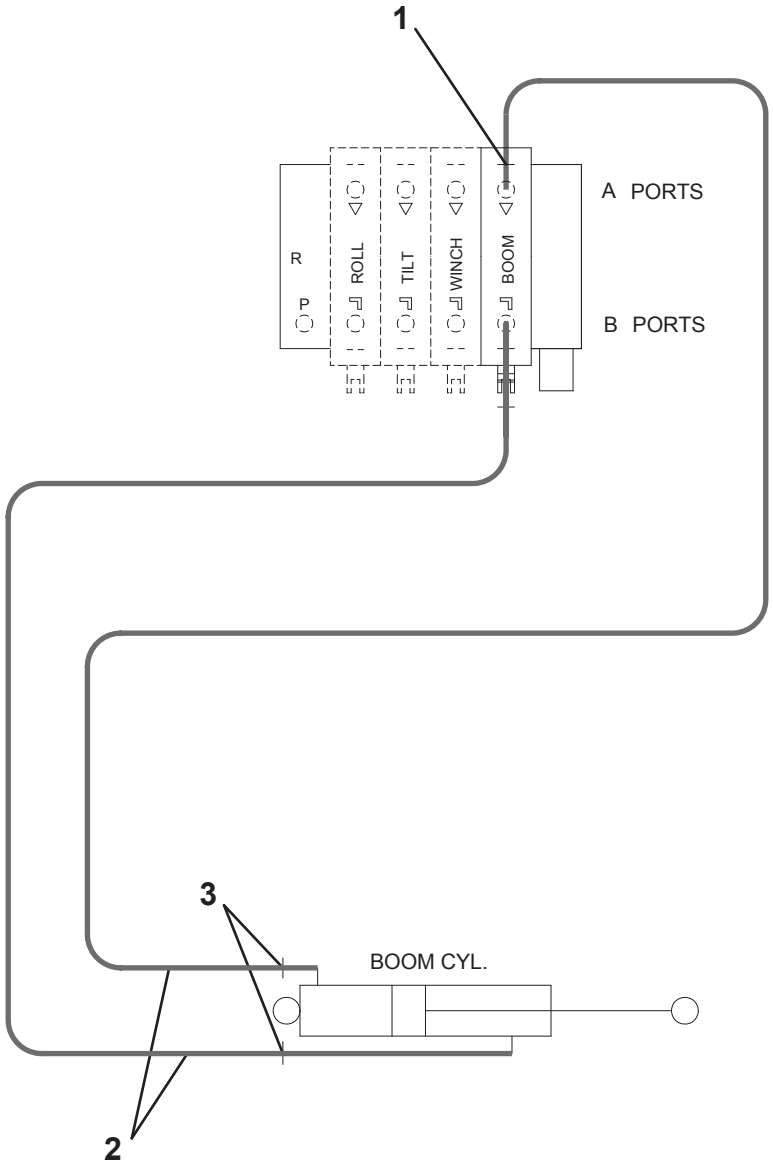

ELECTRICAL COMPONENTS - STANDARD W/ BOLT-ON HEADBOARD

ITEM	PART NO.	DESCRIPTION	QTY
1	7552000098	Subframe to Deck Harness	1
2	7552000074	Subframe to Cab Harness	1
3	7552000126	Subframe Harness	1
4	7552000177	Deck Harness	1
5	7552000166	Winch Lights Harness	1
6	7552000222	Work Lights on Headboard Harness	1
7	7345241902	Terminal	1
8	7457000004	Circuit Breaker	1
9	7790100856	Screw, #10 x 0.50”	2
10	7345221902	Terminal	2
11	7950100151	Flatwasher, 0.19” ID	2
12	7280000013	Clip	*
13	7577000194	Wiring Connector Kit	1

* Quantity varies depending on deck construction

ELECTRICAL COMPONENTS - STANDARD W/ BOLT-ON HEADBOARD

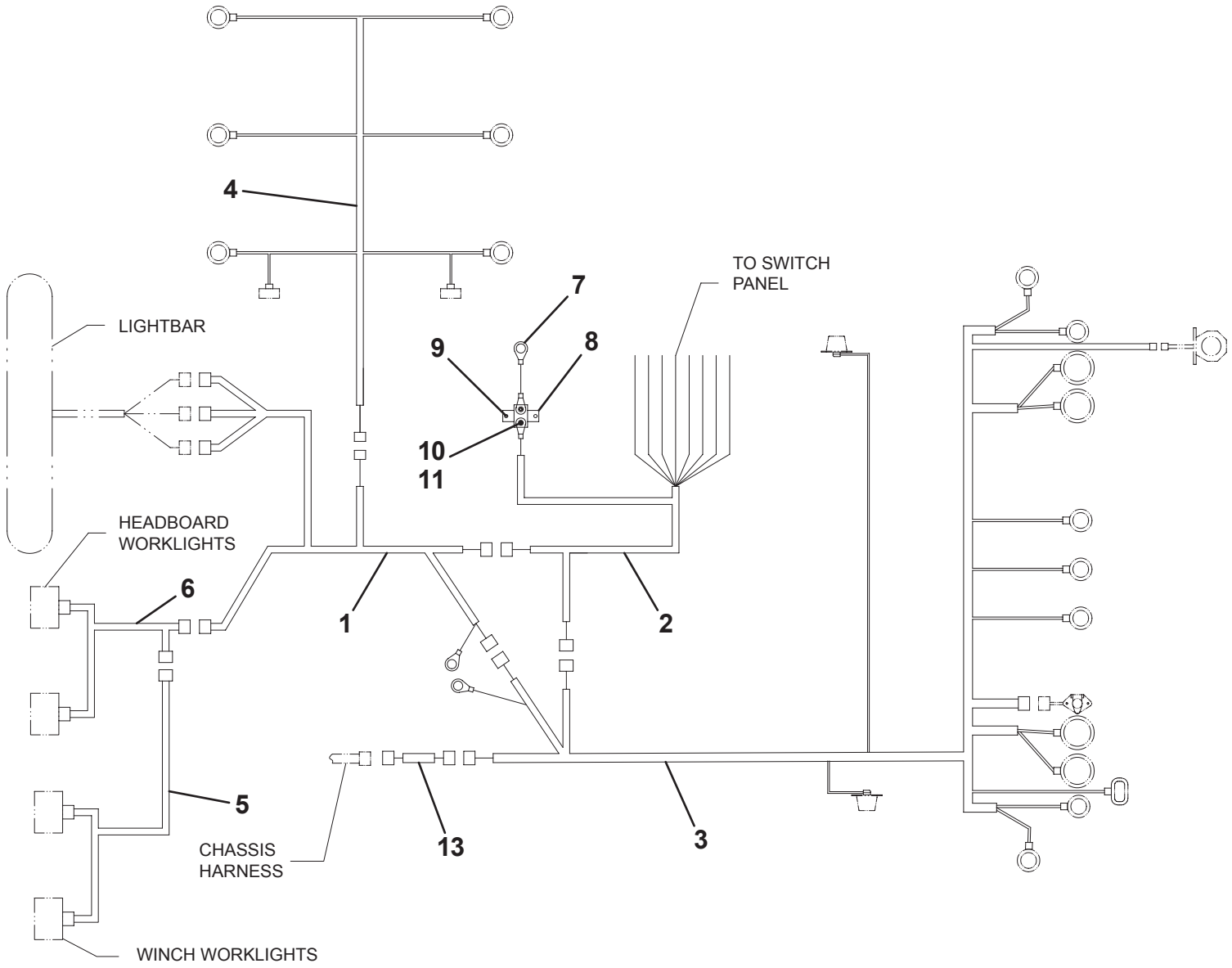

ELECTRICAL COMPONENTS - STANDARD W/ STATIONARY HEADBOARD

ITEM	PART NO.	DESCRIPTION	QTY
1	7552000204	Subframe to Cab Harness	1
2	7552000075	Subframe to Deck Harness	1
3	7552000126	Subframe Harness	1
4	7552000177	Deck Harness	1
5	7552000166	Winch Lights Harness	1
6	7345241902	Terminal	1
7	7457000004	Circuit Breaker	1
8	7790100856	Screw, #10 x 0.50”	2
9	7345221902	Terminal	2
10	7950100151	Flatwasher, 0.19” ID	2
11	7280000013	Clip	*
12	7577000194	Wiring Connector Kit	1

* Quantity varies depending on deck construction

ELECTRICAL COMPONENTS - STANDARD W/ STATIONARY HEADBOARD

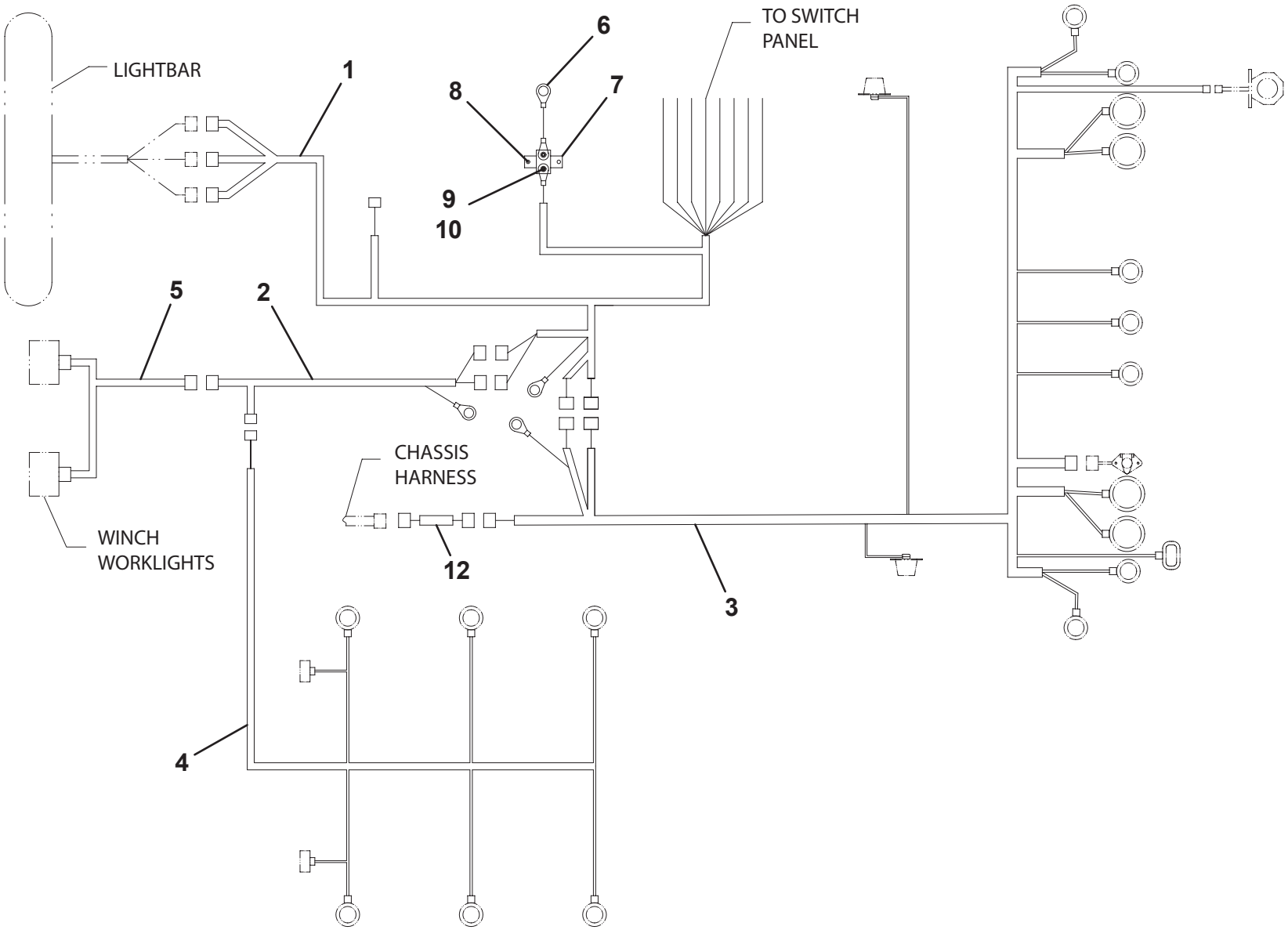

DECK MARKER LIGHTS

ITEM	PART NO.	DESCRIPTION	QTY
1	7590000339	Light, Amber	2
	7590000148	Light, Amber - 24V	2
2	7590000342	Light, Round - Amber	8
	7590000133	Light, Round - Amber - 24V	8
3	7590000343	Light, Round - Red	2
	7590000132	Light, Round - Red - 24V	2
4	7493000010	Grommet	2
5	7493000009	Grommet	10

DECK MARKER LIGHTS

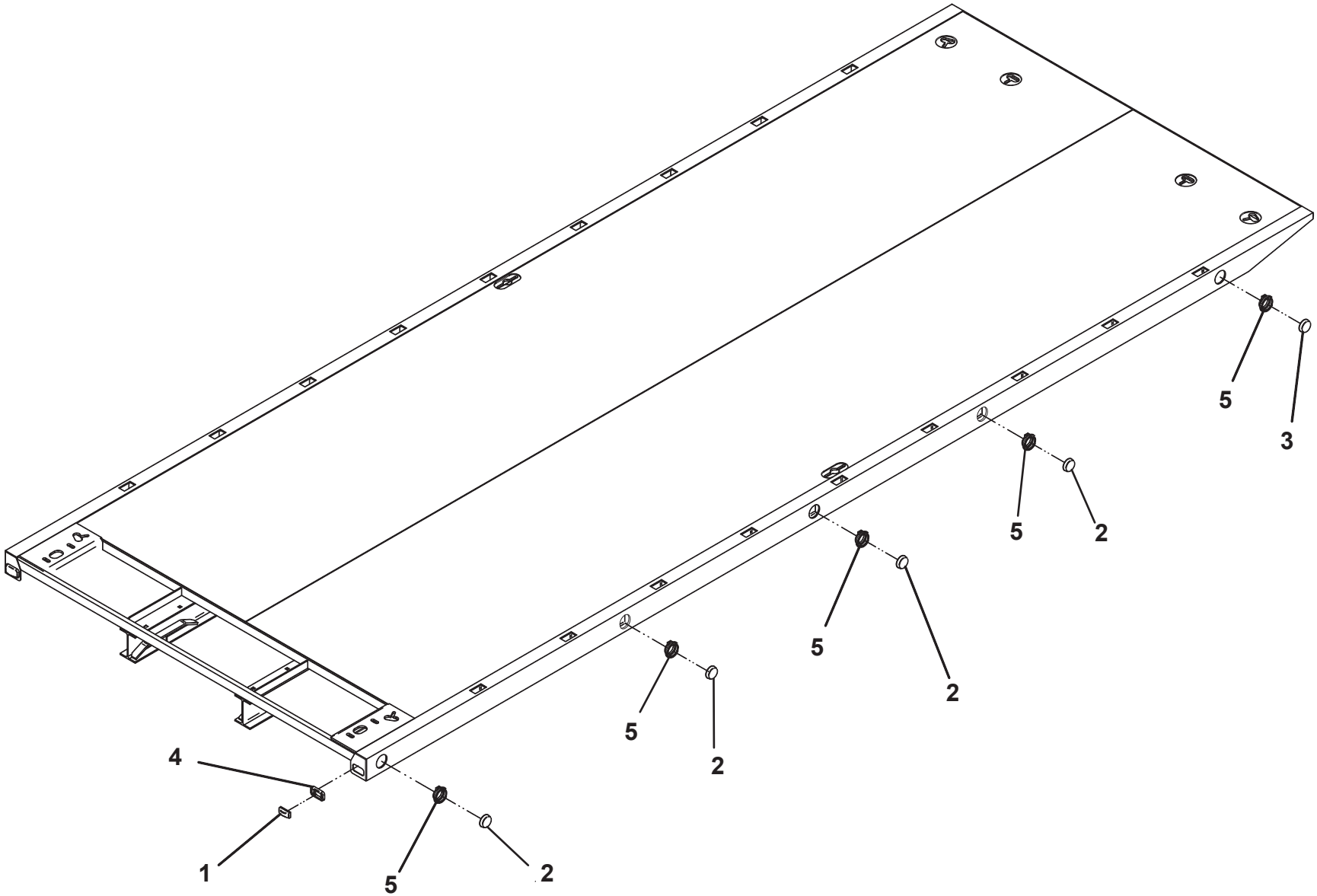

R.A.I.L. MARKER LIGHTS

ITEM	PART NO.	DESCRIPTION	QTY
1	1001145074	Bracket w/ Whelen Flash, LH	2
2	1001145075	Bracket w/ Whelen Flash, RH	2
3	1001143064	Bracket, LH	2
	1001143063	Bracket, RH	2
4	1001145629	Double Sided Tape	4
5	1001143690	Lamp, Strobe	4
6	1001145077	Harness	1
7	7493000009	Grommet	8
8	7590000342	Light, Amber	2
9	7590000343	Light, Red	2
10	1001144986	Harness, Headboard	1

R.A.I.L. MARKER LIGHTS

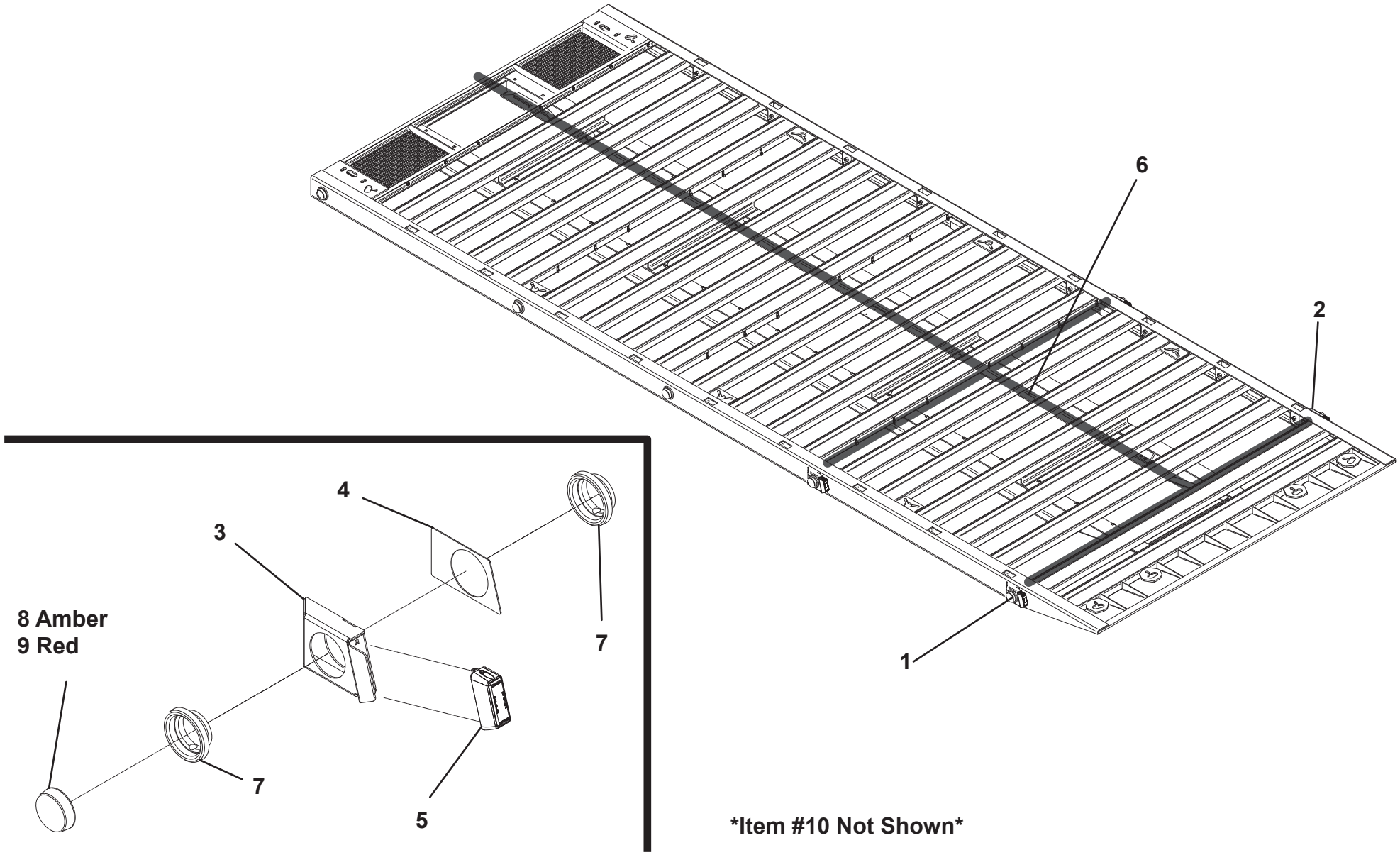

Item #10 Not Shown

HEADBOARD SIDE MARKER LIGHTS

ITEM	PART NO.	DESCRIPTION	QTY
1	7493000009	Grommet (36” & 40” Headboard)	2
	7493000009	Grommet (45”, 50” & 57” Headboard)	4
2	7590000342	Marker Light - Amber (LED)	2
		(36” & 40” Headboard)	
	7590000342	Marker Light - Amber (LED)	4
		(45”, 50” & 57” Headboard)	
3	7552000409	Headboard to Cab Harness	1

HEADBOARD SIDE MARKER LIGHTS

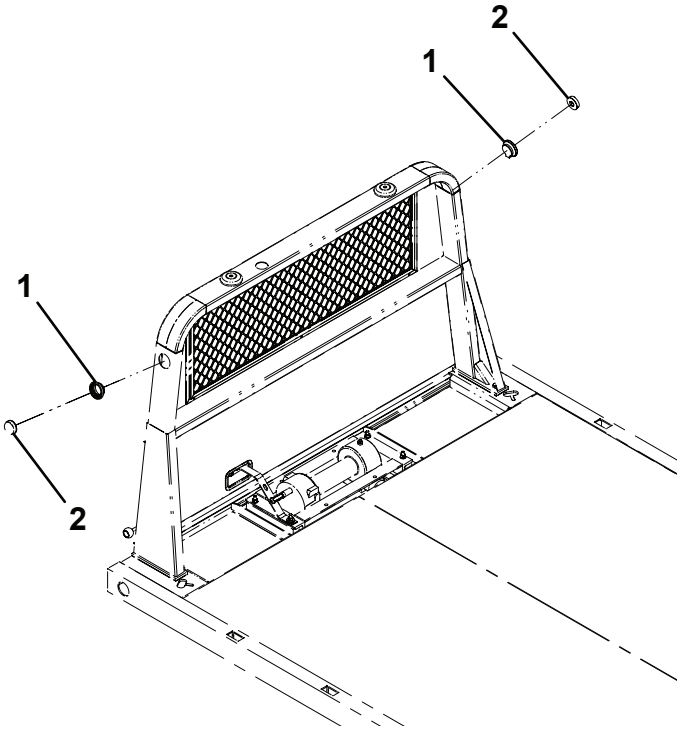

FOR 36” & 40” HEADBOARDS

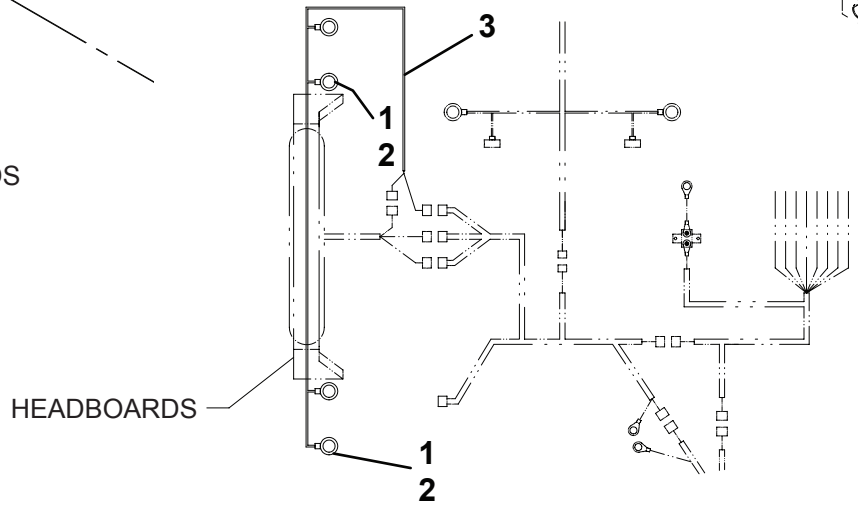

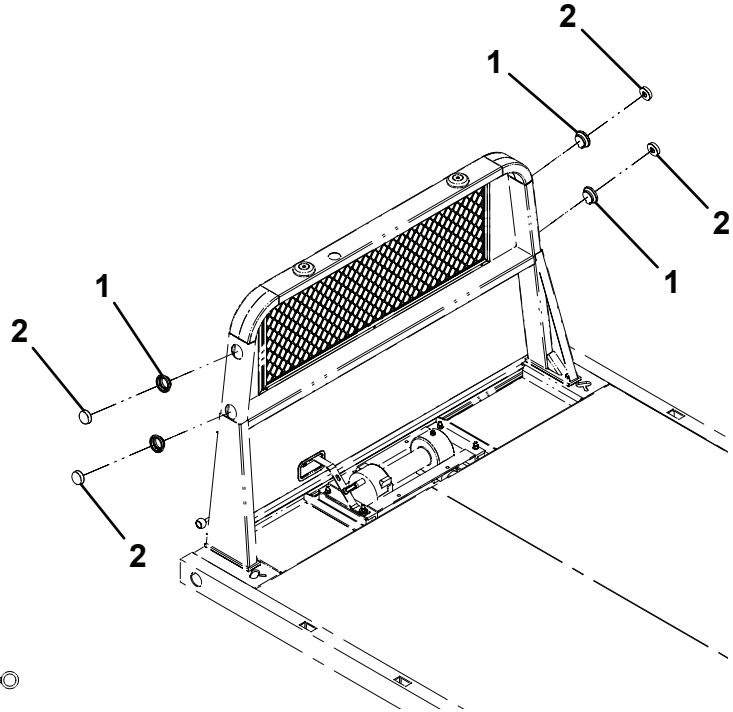

FOR 45”, 50” & 57” HEADBOARDS

ELECTRICAL COMPONENTS - OPTIONAL (TAIL LIGHT CONVERTER)

ITEM	PART NO.	DESCRIPTION	QTY
1	7552000472	Harness	1
2	7590000432	Light	2
3	7114101018	Capscrew, #10-24NC x 1.25"	6
4	7660102604	Locknut, #10-24UNC	6
5	1001142769	Light	-2
6	7493000002	Grommet	-2
7	1001159336	Converter	1
8	7345001714	Terminal	6
9	7346000039	Heat Shrink Tubing	0.2
10	1001100949	Diode	1

ELECTRICAL COMPONENTS - OPTIONAL (TAIL LIGHT CONVERTER)

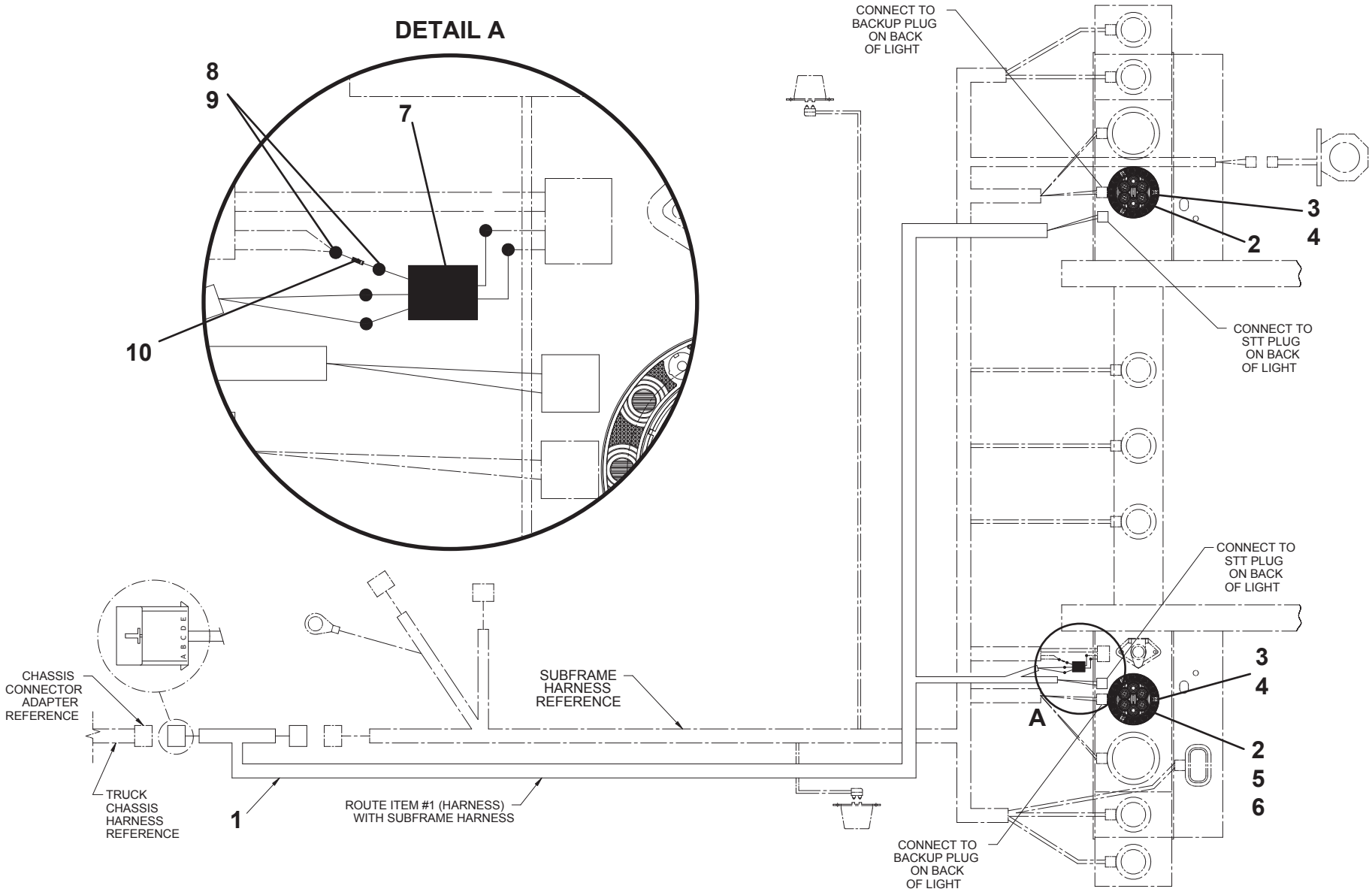

IRL WHEEL LIFT - MANUAL GRIDS

ITEM	PART NO.	DESCRIPTION	QTY
1	3170000170	Boom Outer Weld - Standard	1
	3170000445	Boom Outer Weld - Standard - Galvanized	1
	3170000450	Boom Outer Weld - Extended	1
	3170000456	Boom Outer Weld - Extended - Galvanized	1
2	1001158626	Tube Inner Weld	1
3	3320000115	Cylinder	1
4	4691000296	Pin	1
5	4691000268	Pin	1
6	7754000006	Retaining Ring	4
7	7209000030	Bushing	1
8	4679000046	Pad	1
9	4017000739	Angle	2
10	7118140418	Capscrew, 0.25”-20NC x 0.50"	4
11	4751300	Flatwasher, 0.18"	4
12	4679000211	Pad	1
13	3320000114	Cylinder	2
14	3691000164	Pin	2
15	7115160950	Bolt, 0.38”-16NC x 1.13"	6
16	7660162601	Locknut, 0.38”-16NC	6
17	3691000166	Pin	3
18	3020000113	Arm Weld - Galvanized	2
	3020000097	Arm Weld - Standard	2
19	7082000017	Bearing	4
20	7082000018	Bearing	4
21	3592000057	Link Assembly - Galvanized	1
	3592000036	Link Assembly - Standard	1
22	3691000069	Pin	1
23	7082000016	Bearing	4
24	7291000010	Connector Assembly	1
25	7796000048	Gasket	1
26	7114140528	Screw, 0.25”-20NC x 0.63"	2
27	7660142601	Locknut, 0.25”-20NC	2

IRL WHEEL LIFT - MANUAL GRIDS

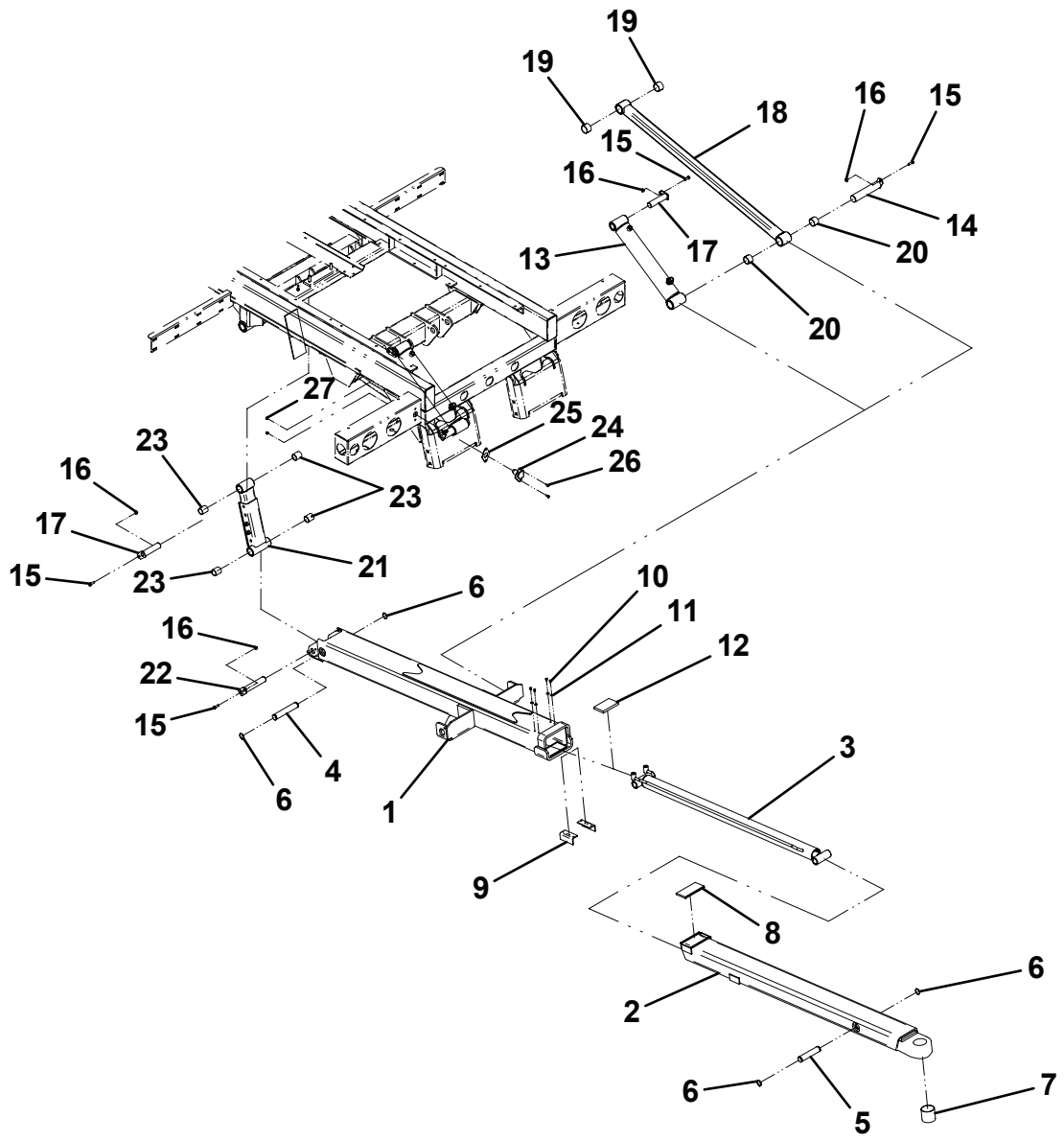

IRL WHEEL LIFT - HYDRAULIC GRIDS

ITEM	PART NO.	DESCRIPTION	QTY
1	3170000428	Boom Weld Outer	1
2	1001158626	Tube Weld Inner	1
3	3320000115	Cylinder	1
4	4691000296	Pin	1
5	4691000268	Pin	1
6	7754000006	Retaining Ring	4
7	7209000030	Bushing	1
8	4679000046	Pad	1
9	4017000739	Angle	2
10	7118140418	Capscrew 0.25"-20NC x 0.50"	4
11	4751300	Flatwasher, 0.18" ID	4
12	4679000211	Pad	1
13	3320000114	Cylinder - High Frame	2
	3320000134	Cylinder	
14	3691000164	Pin	2
15	7115160950	Bolt, 0.38”-16NC x 1.13"	6
16	7660162601	Locknut, 0.38”-16NC	6
17	3691000166	Pin	3
18	3020000097	Arm Weld - High Frame	2
	3020000110	Arm Weld	2
19	7082000017	Bearing	4
20	7082000018	Bearing	4
21	3592000054	Link Assembly	1
22	3691000092	Pin	1
23	7082000016	Bearing	4
24	7291000010	Connector Assembly	1
25	7796000048	Gasket	1
26	7114140528	Screw, 0.25”-20NC x 0.63"	2
27	7660142601	Locknut, 0.25" -20NC	2

IRL WHEEL LIFT - HYDRAULIC GRIDS

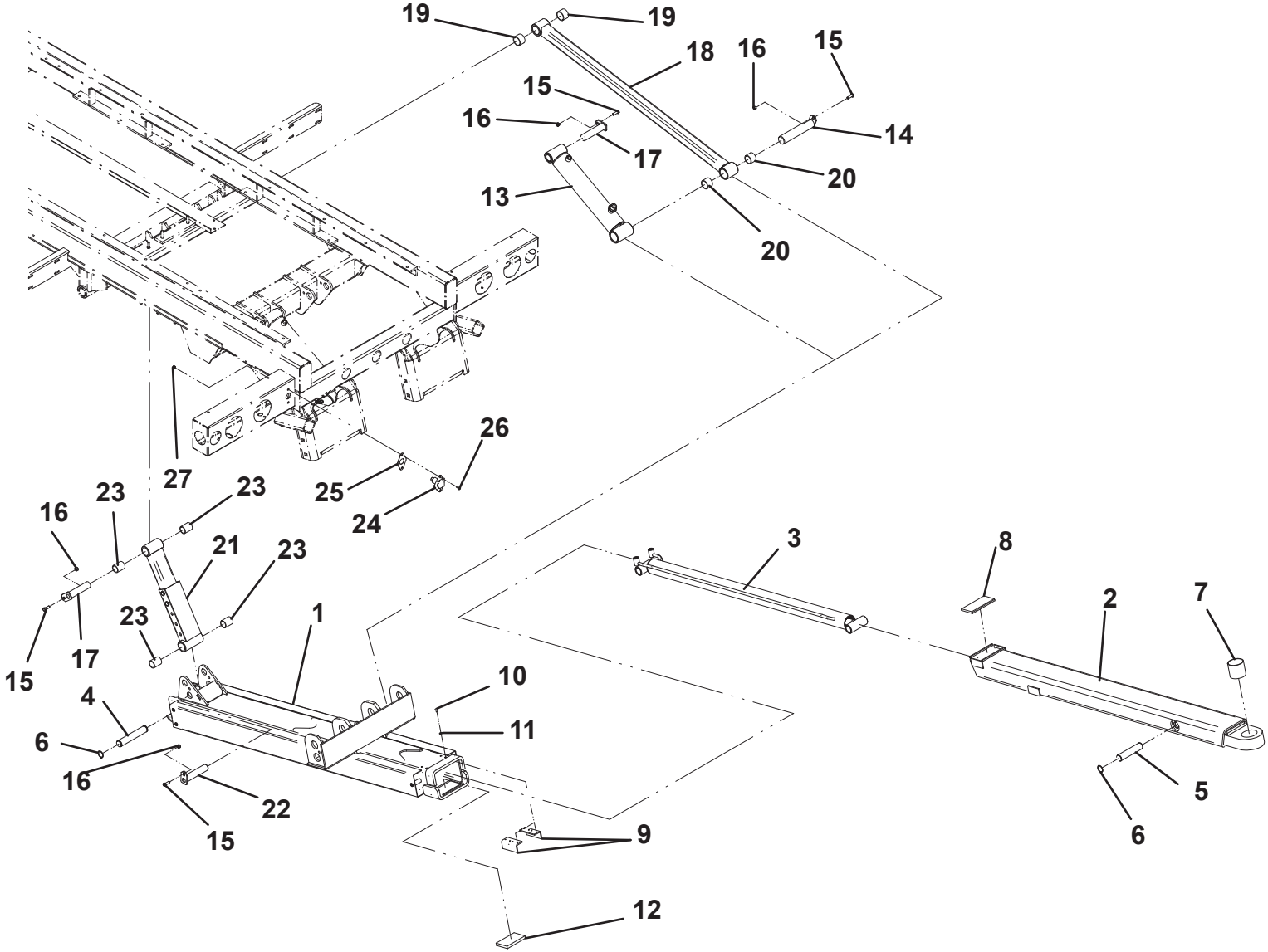

ZOD WHEEL LIFT - MANUAL GRIDS

ITEM	PART NO.	DESCRIPTION	QTY
1	3170000237	Boom Weld Outer - Standard	1
	3170000460	Boom Weld Outer - Galvanized	1
	3170000504	Boom Weld Outer - Galvanized (T-37 Grids)	
2	1001158626	Tube Weld Inner	1
	1001158627	Tube Weld Inner - Galvanized (T-37 Grids)	
3	3320000115	Cylinder	1
4	4691000296	Pin	1
5	4691000268	Pin	1
6	7754000006	Retaining Ring	4
7	7209000030	Bushing	1
8	4679000046	Pad	2
9	4017000739	Angle	2
10	7118140418	Capscrew, 0.25”-20NC x 0.50"	4
11	4751300	Flatwasher, 0.18" ID	4
12	4679000211	Pad	1
13	3320000114	Cylinder	2
14	3691000164	Pin	2
15	7115160950	Bolt, 0.38”-16NC x 1.13"	6
16	7660162601	Locknut, 0.38”-16NC	6
17	3691000166	Pin	3
18	3020000097	Arm Weld - Standard	2
	3020000113	Arm Weld - Galvanized	2
19	7082000017	Bearing	4
20	7082000018	Bearing	4
21	3320000118	Cylinder	1
22	3691000069	Pin	1
23	7291000010	Connector Assembly	1
24	7796000048	Gasket	1
25	7114140528	Screw, 0.25”-20NC x 0.63"	2
26	7660142601	Locknut, 0.25”-20NC	2
27	7082000016	Bearing	8
28	7082000018	Bearing	4

ZOD WHEEL LIFT - MANUAL GRIDS

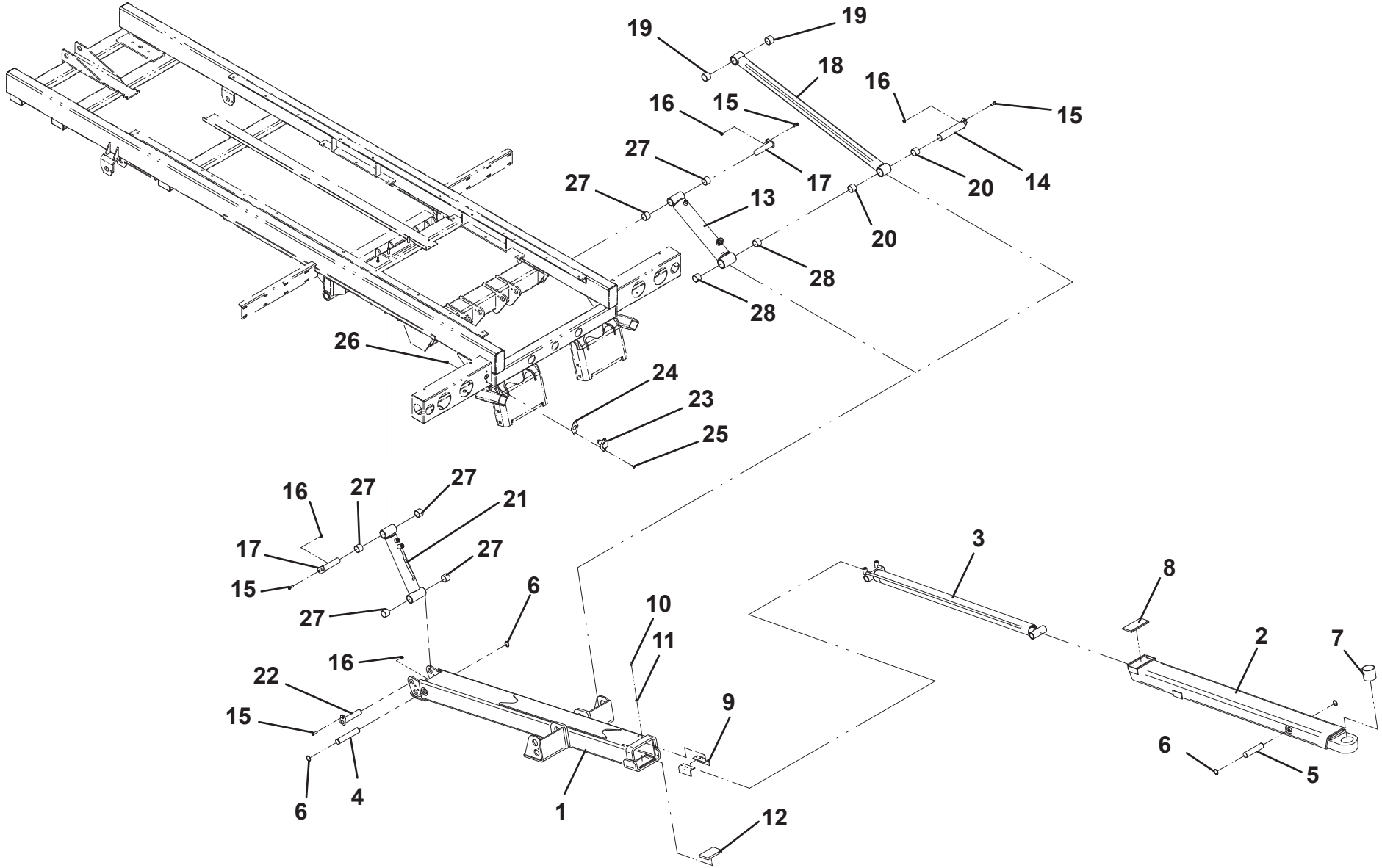

ZOD WHEEL LIFT - HYDRAULIC GRIDS

ITEM	PART NO.	DESCRIPTION	QTY
1	3170000428	Boom Weld Outer	1
2	1001158626	Tube Weld Inner	1
3	3320000115	Cylinder	1
4	4691000296	Pin	1
5	4691000268	Pin	1
6	7754000006	Retaining Ring	4
7	7209000030	Bushing	1
8	4679000046	Pad	1
9	4017000739	Angle	2
10	7118140418	Capscrew, 0.25”-20NC x 0.50"	4
11	4751300	Flatwasher, 0.18" ID	4
12	4679000211	Pad	1
13	3320000114	Cylinder	2
14	3691000164	Pin	2
15	7115160950	Bolt, 0.38”-16NC x 1.13"	6
16	7660162601	Locknut, 0.38”-16NC	6
17	3691000166	Pin	3
18	3020000097	Arm Weldment, 53.88”	2
	3020000110	Arm Weldment - Frame Heights > 37.00”	2
19	7082000017	Bearing	4
20	7082000018	Bearing	4
21	3320000157	Cylinder	1
22	3691000092	Pin	1
23	7291000010	Connector Assembly	1
24	7660142601	Locknut, 0.25”-20NC	2
25	7114140528	Screw .25”-20NC x 0.63"	2
26	7796000048	Gasket	1
27	7082000016	Bearing	8
28	7082000018	Bearing	4

ZOD WHEEL LIFT - HYDRAULIC GRIDS

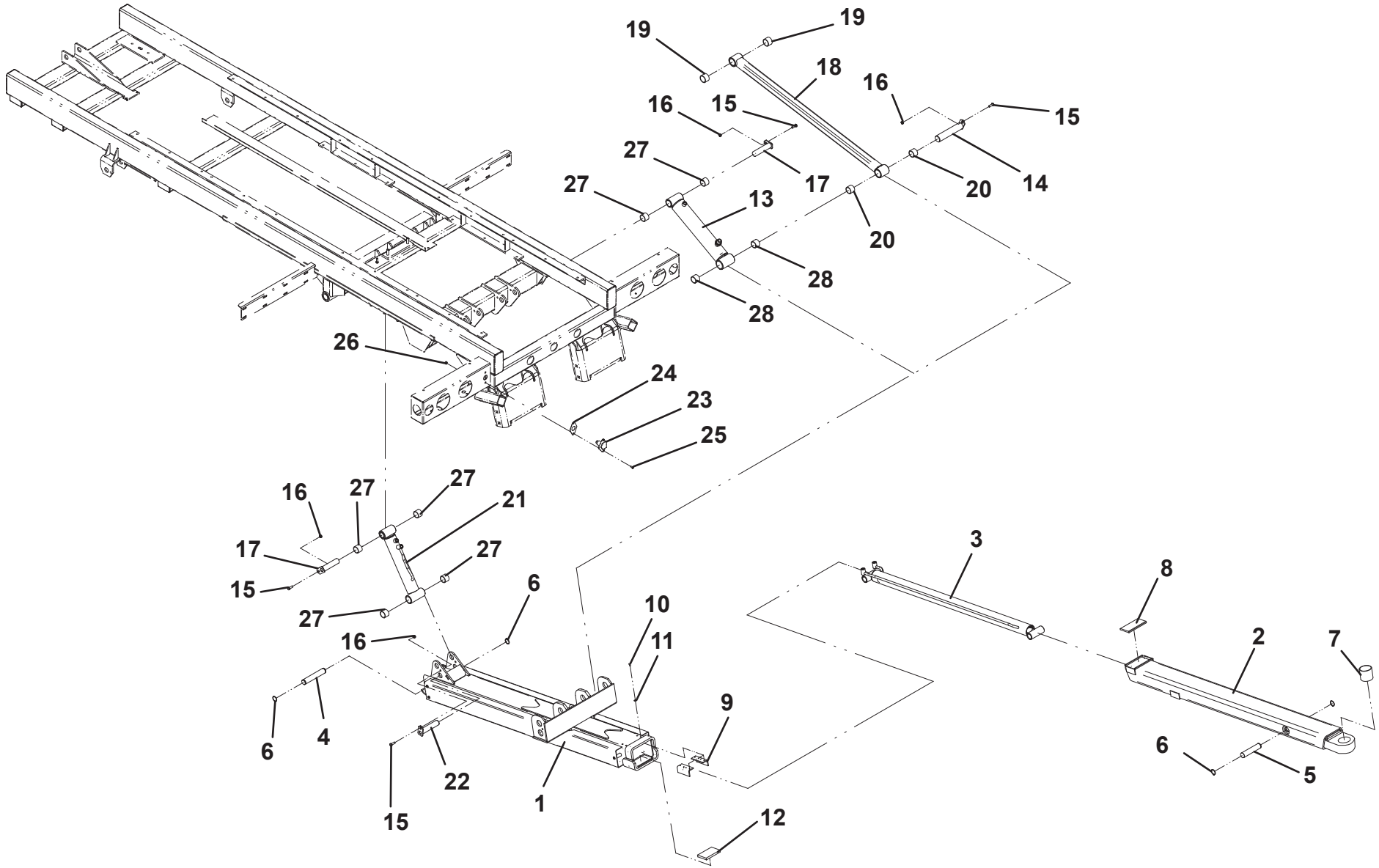

MANUAL L-ARM WHEEL LIFT GRID W/ BALL PLATE

ITEM	PART NO.	DESCRIPTION	QTY
1	3913000093	Tube Weld Pivot w/ Ball Plate - IRL	1
	3913000096	Tube Weld Pivot w/ Ball Plate - ZOD	1
2	3484000035	Grid Weld LH	1
3	3484000034	Grid Weld RH	1
4	4691000278	Pin	1
5	4949000047	Washer, 5.00" OD x 2.84" ID	2
6	7754000024	Retaining Ring	1
7	3551000036	T-Handle	2
	1001153950	Cam-Lock	2
8	3020000072	L-Arm Weld - Standard	2
8	3020000114	L-Arm Weld Galvanized	2
9	7701000062	Plug	2
10	3551000011	Cam Lock Assembly	2
11	7253000002	Grease Fitting	1
12	7330000419	Decal	2
13	7330000417	Decal, LH	1
14	7330000418	Decal, RH	1
15	7330000609	Decal, Grease Required	1
16	7440030000	Grease Fitting	2
101	1001153944	Pin	1
102	1001153945	Tube	1
103	1001153946	Cap	1
104	1001153947	Handle	1
105	1001153971	Spring	1
106	7440030000	Grease Fitting	1
107	7253000002	Grease Fitting Cap	1

MANUAL L-ARM WHEEL LIFT GRID W/ BALL PLATE

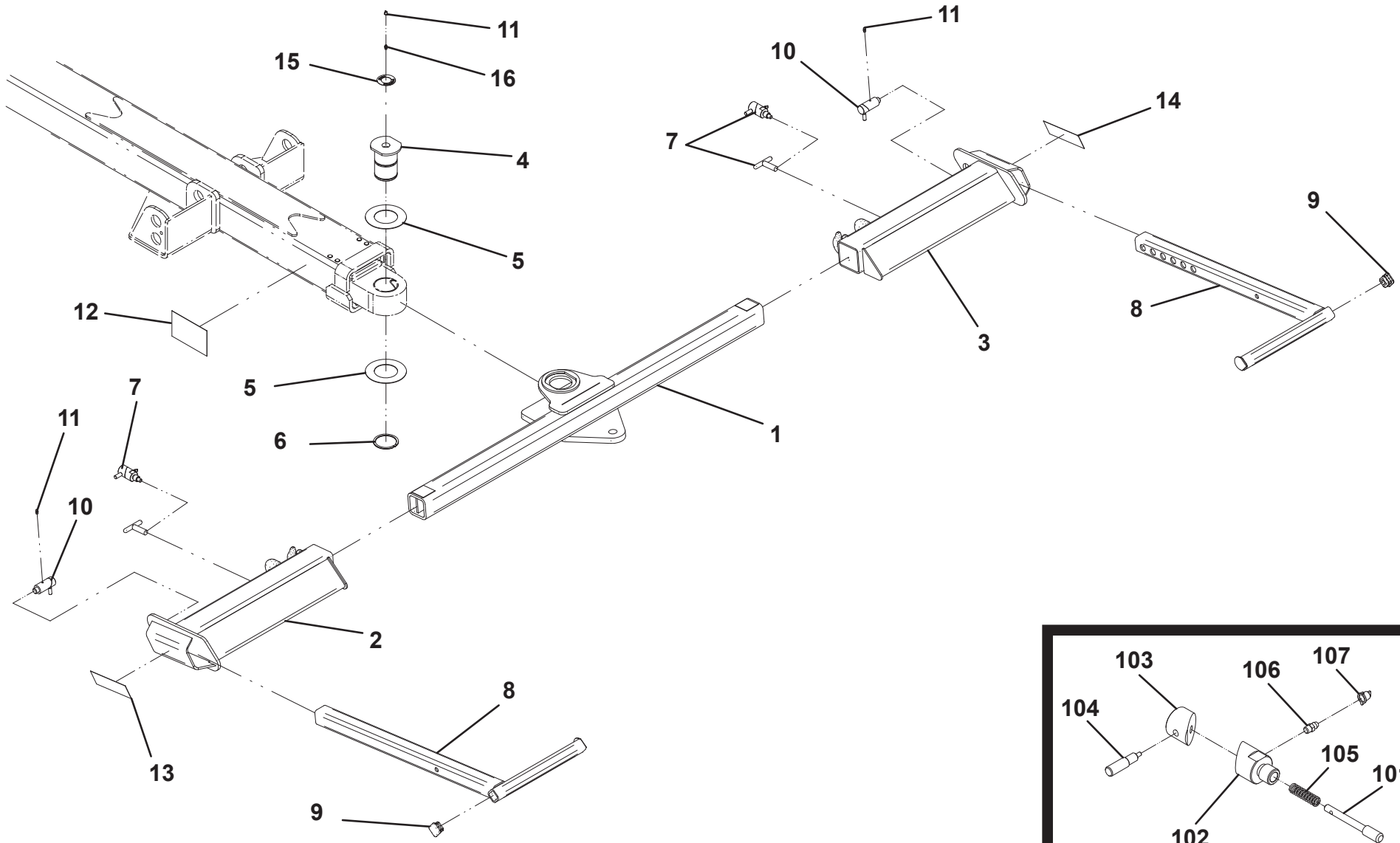

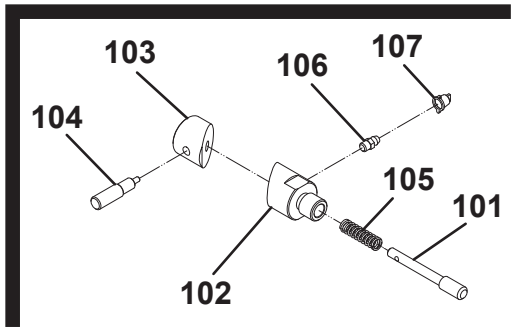

MANUAL L-ARM WHEEL LIFT GRID W/ REESE RECIEVER

ITEM	PART NO.	DESCRIPTION	QTY
1	3913000098	Tube Weld Pivot w/ Reese - IRL	1
	3913000099	Tube Weld Pivot w/ Reese - ZOD	1
2	3484000035	Grid Weld LH	1
3	3484000034	Grid Weld RH	1
4	4691000278	Pin	1
5	4949000047	Washer, 5.00" OD x 2.84" ID	2
6	7754000024	Retaining Ring	1
7	3551000036	T-Handle	2
	1001153950	Cam-Lock	2
8	3020000072	L-Arm Weld - Standard	2
8	3020000114	L-Arm Weld - Galvanized	2
9	7701000062	Plug	2
10	3551000011	Cam Lock Assembly	2
11	7253000002	Grease Fitting	1
12	7330000419	Decal	2
13	7330000417	Decal, LH	1
14	7330000418	Decal, RH	1
15	7330000609	Decal, Grease Required	1
16	7440030000	Grease Fitting	2
101	1001153944	Pin	1
102	1001153945	Tube	1
103	1001153946	Cap	1
104	1001153947	Handle	1
105	1001153971	Spring	1
106	7440030000	Grease Fitting	1
107	7253000002	Grease Fitting Cap	1

MANUAL L-ARM WHEEL LIFT GRID W/REESE RECIEVER

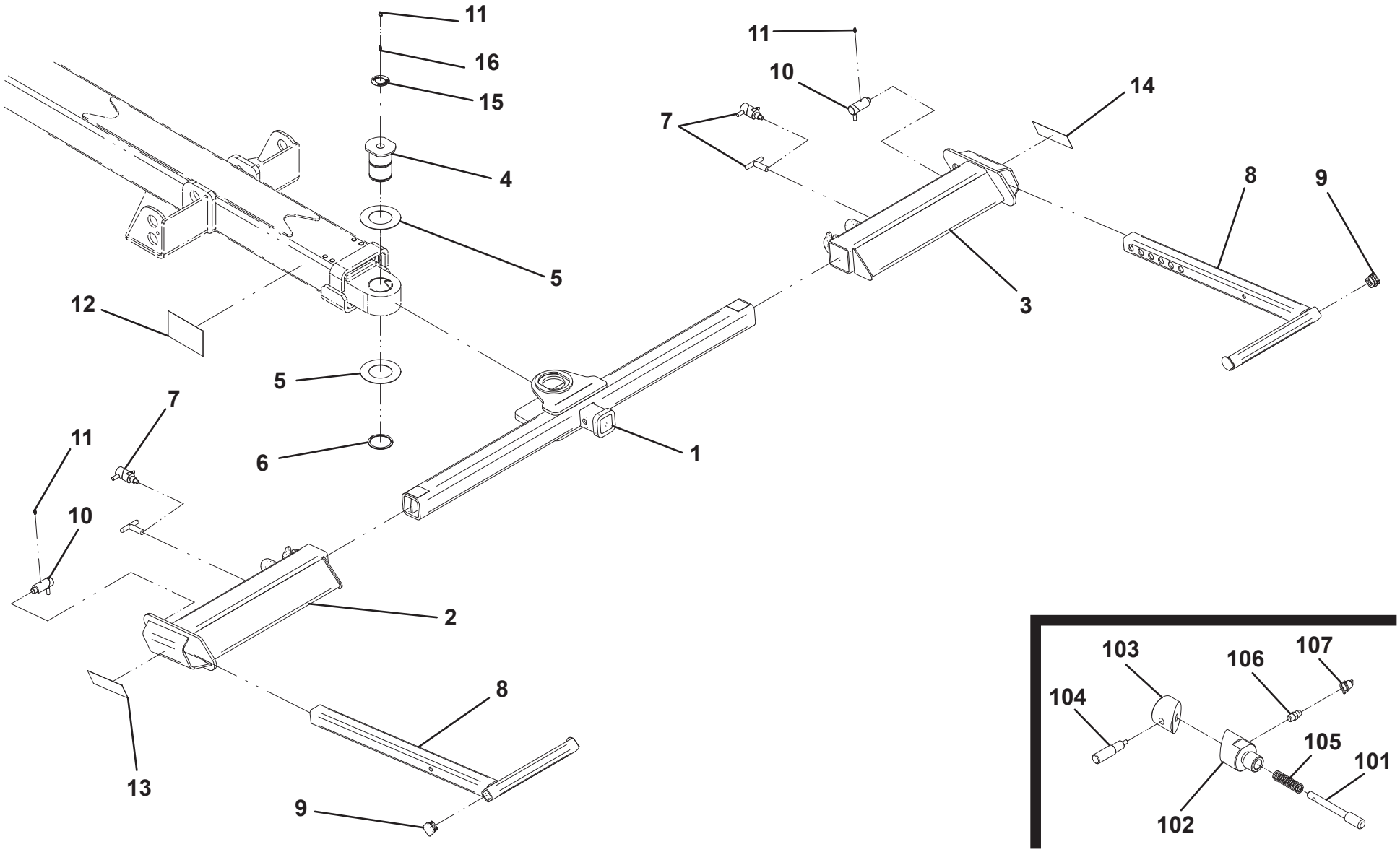

MANUAL L-ARM WHEEL LIFT GRID W/ PINTLE PLATE

ITEM	PART NO.	DESCRIPTION	QTY
1	3550001747	Tube Weld Pivot w/ Pintle	1
2	3484000035	Grid Weld LH	1
3	3484000034	Grid Weld RH	1
4	4691000278	Pin	1
5	4949000047	Washer, 5.00" OD x 2.84" ID	2
6	7754000024	Retaining Ring	1
7	3551000036	T-Handle	2
	1001153950	Cam-Lock	2
8	3020000072	L-Arm Weld - Standard	2
9	7701000062	Plug	2
10	3551000011	Cam Lock Assembly	2
11	7253000002	Grease Fitting	1
12	7330000419	Decal	2
13	7330000417	Decal, LH	1
14	7330000418	Decal, RH	1
15	7330000609	Decal, Grease Required	1
16	7440030000	Grease Fitting	2
101	1001153944	Pin	1
102	1001153945	Tube	1
103	1001153946	Cap	1
104	1001153947	Handle	1
105	1001153971	Spring	1
106	7440030000	Grease Fitting	1
107	7253000002	Grease Fitting Cap	1

MANUAL L-ARM WHEEL LIFT GRID W/ PINTLE PLATE

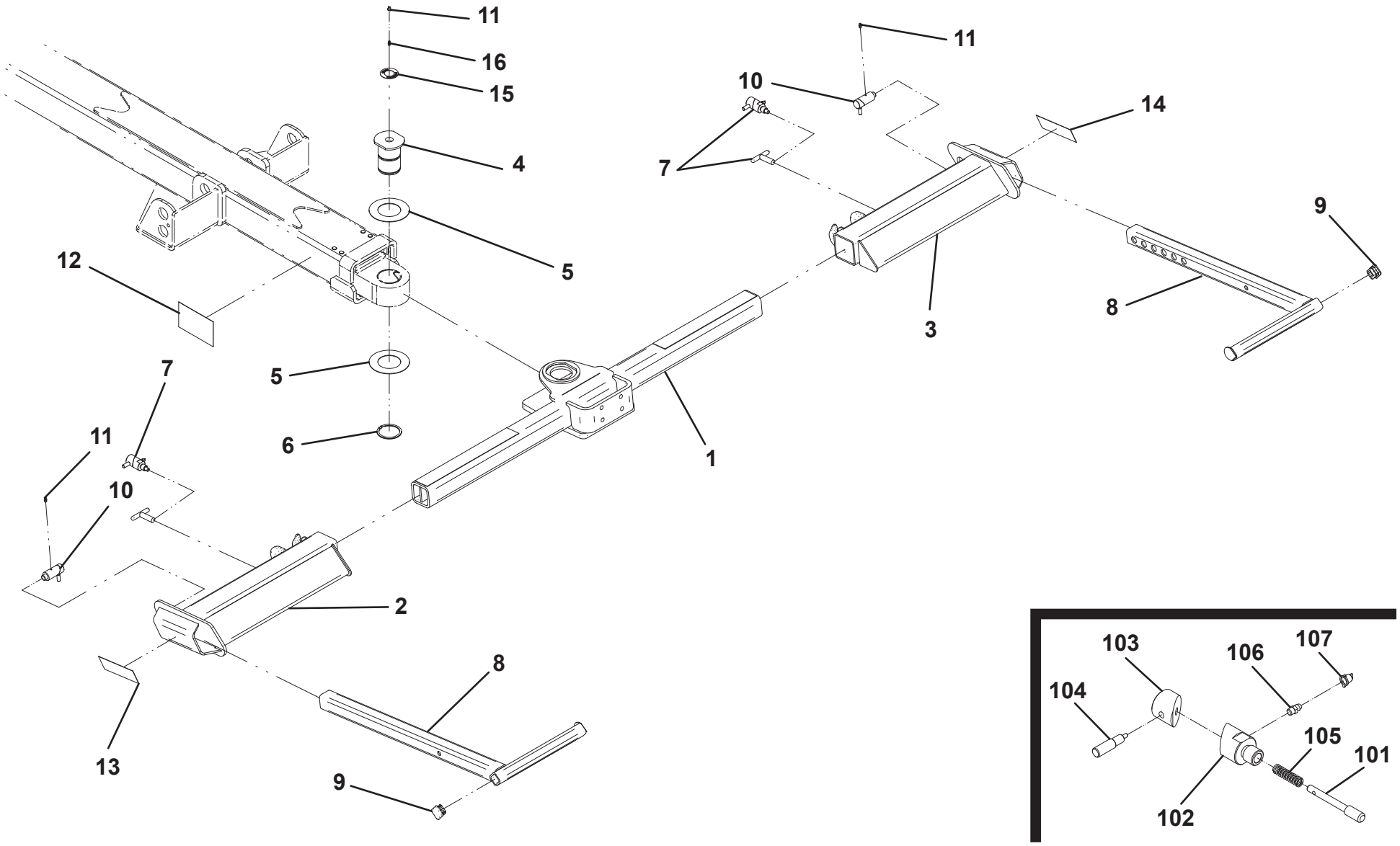

MANUAL T37 PIVOTING WHEEL LIFT GRID W/ BALL PLATE

ITEM	PART NO.	DESCRIPTION	QTY
1	3484000051	Grid Weld LH	1
2	4259000002	Grid Pivot LH	1
3	4691000354	Pin	1
4	7440030000	Grease Fitting	4
5	4691000186	Pin	1
6	7843000006	Spring	1
7	4254000005	Cap, 1.25" x 1.22"	1
8	4763000184	Rod	1
9	7843000016	Spring	1
10	4691000183	Pin	1
11	7786000006	Screw, 0.75”-10NC x 0.63"	1
12	7950200000	Lockwasher, 0.63" ID	1
13	4691000357	Pin	1
14	7754000037	Retaining Ring	1
1	3484000050	Grid Weld RH	1
2	4259000001	Grid Pivot RH	1
15	3020000030	L-Arm Weld RH	1
16	3020000029	L-Arm Weld LH	1
17	7330000419	Decal	2
18	7330000420	Decal LH	1
19	7330000432	Decal RH	1
20	3551000036	T-Handle Weld	2
	1001153950	Cam-Lock	2
21	3913000093	Tube Weld Pivot w/Ball Plate - IRL	1
	3913000096	Tube Weld Pivot w/Ball Plate - ZOD	1
22	4691000278	Pin	1
23	7754000024	Retaining Ring	1
24	4949000047	Washer, 5.00" OD x 2.84" ID	2
25	7330000609	Decal	1
26	7253000002	Grease Fitting Cap	1
101	1001153944	Pin	1
102	1001153945	Tube	1
103	1001153946	Cap	1
104	1001153947	Handle	1
105	1001153971	Spring	1
106	7440030000	Grease Fitting	1
107	7253000002	Grease Fitting Cap	1

MANUAL T37 PIVOTING WHEEL LIFT GRID W/ BALL PLATE

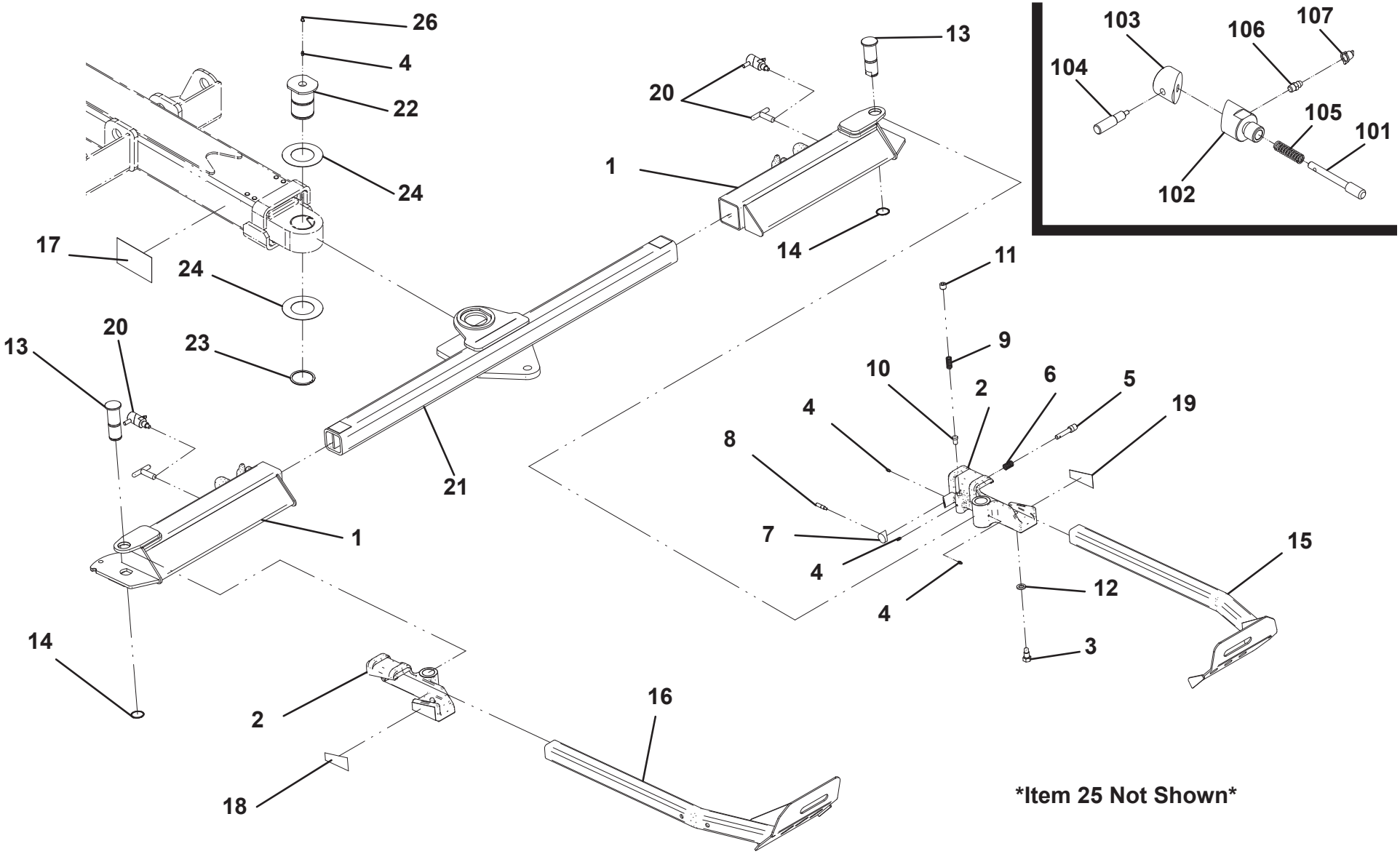

Item 25 Not Shown

MANUAL T37 PIVOTING WHEEL LIFT GRID W/ REESE RECIEVER

ITEM	PART NO.	DESCRIPTION	QTY
1	3484000051	Grid Weld LH	1
2	4259000002	Grid Pivot LH	1
3	4691000354	Pin	1
4	7440030000	Grease Fitting	4
5	4691000186	Pin	1
6	7843000006	Spring	1
7	4254000005	Cap, 1.25" x 1.22"	1
8	4763000184	Rod	1
9	7843000016	Spring	1
10	4691000183	Pin	1
11	7786000006	Screw, 0.75”-10NC x 0.63"	1
12	7950200000	Lockwasher, 0.63" ID	1
13	4691000357	Pin	1
14	7754000037	Retaining Ring	1
1	3484000050	Grid Weld RH	1
2	4259000001	Grid Pivot RH	1
15	3020000030	L-Arm Weld RH	1
16	3020000029	L-Arm Weld LH	1
17	7330000419	Decal	2
18	7330000420	Decal LH	1
19	7330000432	Decal RH	1
20	3551000036	T-Handle Weld	2
	1001153950	Cam-Lock	2
21	3913000098	Tube Weld Pivot - Reese - IRL	1
	3913000099	Tube Weld Pivot - Reese - ZOD	1
22	4691000278	Pin	1
23	7754000024	Retaining Ring	1
24	4949000047	Washer, 5.00" OD x 2.84" ID	2
25	7330000609	Decal	1
26	7253000002	Grease Fitting Cap	1
101	1001153944	Pin	1
102	1001153945	Tube	1
103	1001153946	Cap	1
104	1001153947	Handle	1
105	1001153971	Spring	1
106	7440030000	Grease Fitting	1
107	7253000002	Grease Fitting Cap	1

MANUAL T37 PIVOTING WHEEL LIFT GRID W/ REESE RECIEVER

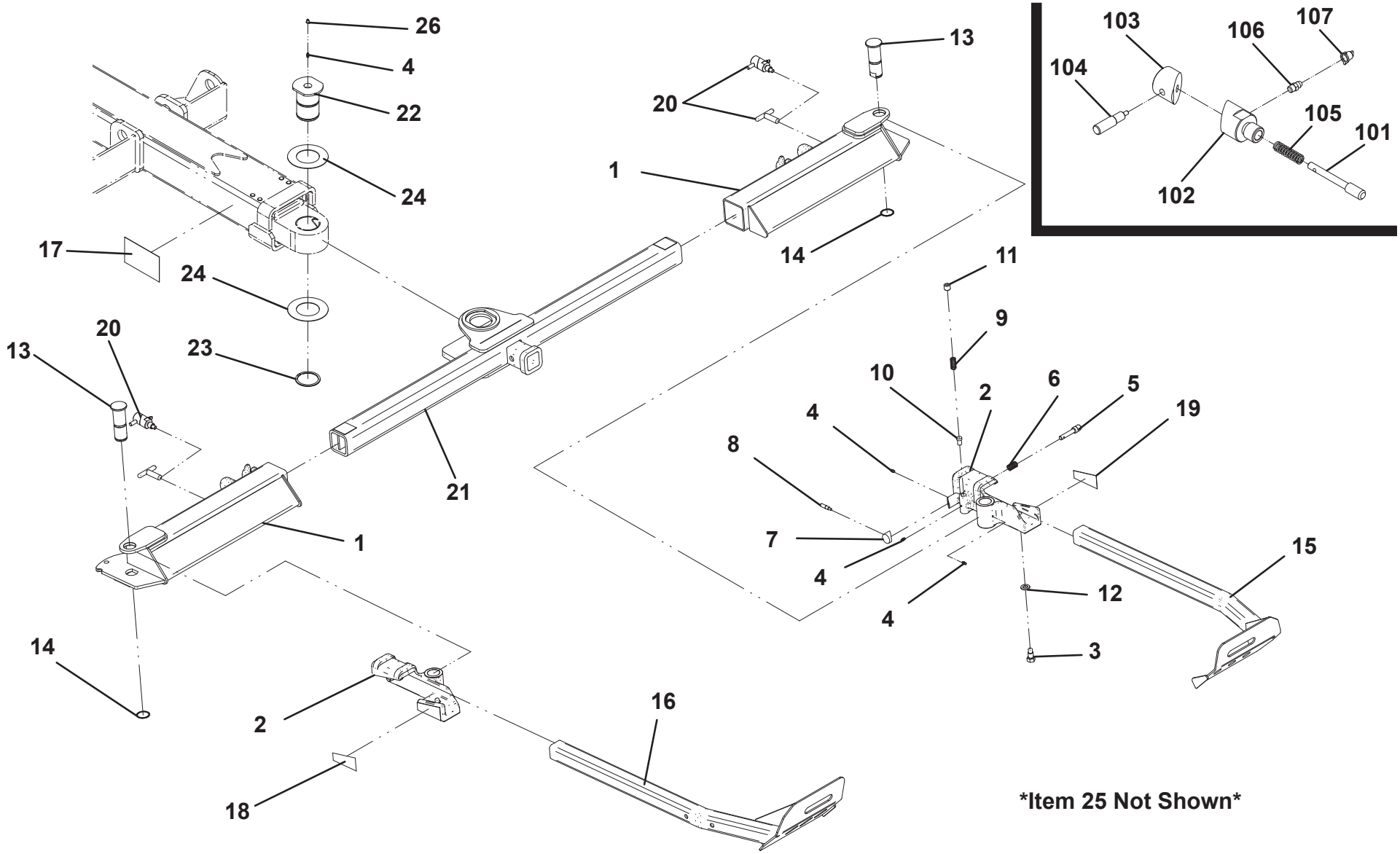

HYDRAULIC WHEEL LIFT GRID

ITEM	PART NO.	DESCRIPTION	QTY
1	4691000198	Pin	1
2	7754000024	Retaining Ring	1
3	4949000047	Washer, 2.84" ID	2
4	4679000268	Pad	1
5	7118161026	Capscrew, 0.38”-16NC x 1.25"	2
6	7330000609	Decal, Grease Required	1
7	7440030000	Grease Fitting	1
8	7253000002	Grease Fitting Cap	1
9	7732000002	Reel w/ Spring	2
10	4706003501	Plate	2
11	7719000004	Pulley	2
12	7691000040	Pin	2
13	7691000042	Cotter Pin	2
14	7912000237	Tube	2
15	7274000073	Hose Clamp 0.25"	4
16	4314000117	Cover Plate, LH	1
17	4314000118	Cover Plate, RH	1
18	7445040431	Elbow	2
19	7445040472	Elbow	2
20	7950150161	Flatwasher, 0.31" ID	4
21	7790151253	Screw, 0.31”-18NC x 0.75"	8
22	7660142604	Locknut, 0.25”-20NC	4
23	7950140153	Flatwasher, 0.25" ID	4
24	4831000109	Spacer	2
25	4570000234	Hose	2
26	7445040445	Elbow	6
27	4570000211	Hose	2
28	4570000212	Hose	2
29	7330000419	Decal	2
30	3020000112	Arm Weldment	2
31	3691000222	Pin	2
32	7115150423	Capscrew, 0.31”-18NC x 0.50"	2
33	4691000527	Pin	2
34	7690144005	Pin	2
35	7690141600	Pin	2
36	7719000005	Pulley	2
37	4831000112	Spacer	4
38	7843000043	Spring	2
39	7248000115	Cable	2
40	7754000006	Retaining Ring	2
41	7754000087	Retaining Ring	4
42	7690021210	Pin	2
43	4949000072	Washer, 1.27" ID	4
44	8411080091	L-Arm Spacer	2
45	3484000074	Grid Weldment	1
46	4314000189	Coverplate	2
47	4619000013	Manifold	1
48	7912000184	Tube	4
49	7320000064	Cylinder	2
50	3691000229	Pin	4
51	7274000039	Clamp Cover	2
52	3592000052	Link Weldment	2
53	3592000051	Link Weldment	2
54	4706003497	Plate	2
55	3020000115	Arm Weldment - LH	1
56	3020000111	Arm Weldment - RH	1
57	3691000230	Pin	2
58	7445040443	Adapter	4
59	7274000086	Clamp Half	4
60	7754000022	Retaining Ring	4
61	7785140400	Screw, 0.25”-20NC x 0.25"	2
62	7114140518	Capscrew, 0.25”-20NC x 0.62"	4
63	7115151250	Capscrew, 0.31”-18NC x 1.50"	4
64	7950150000	Washer, 0.31" ID	2
65	1001137904	Bolt, 0.31”-18NC x 1.25"	6
66	7660152601	Locknut, 0.31”-18NC	6
67	7950140143	Flatwasher, 0.25" ID	4
68	7082000027	Bearing	6
69	7082000026	Bearing	10

HYDRAULIC WHEEL LIFT GRID

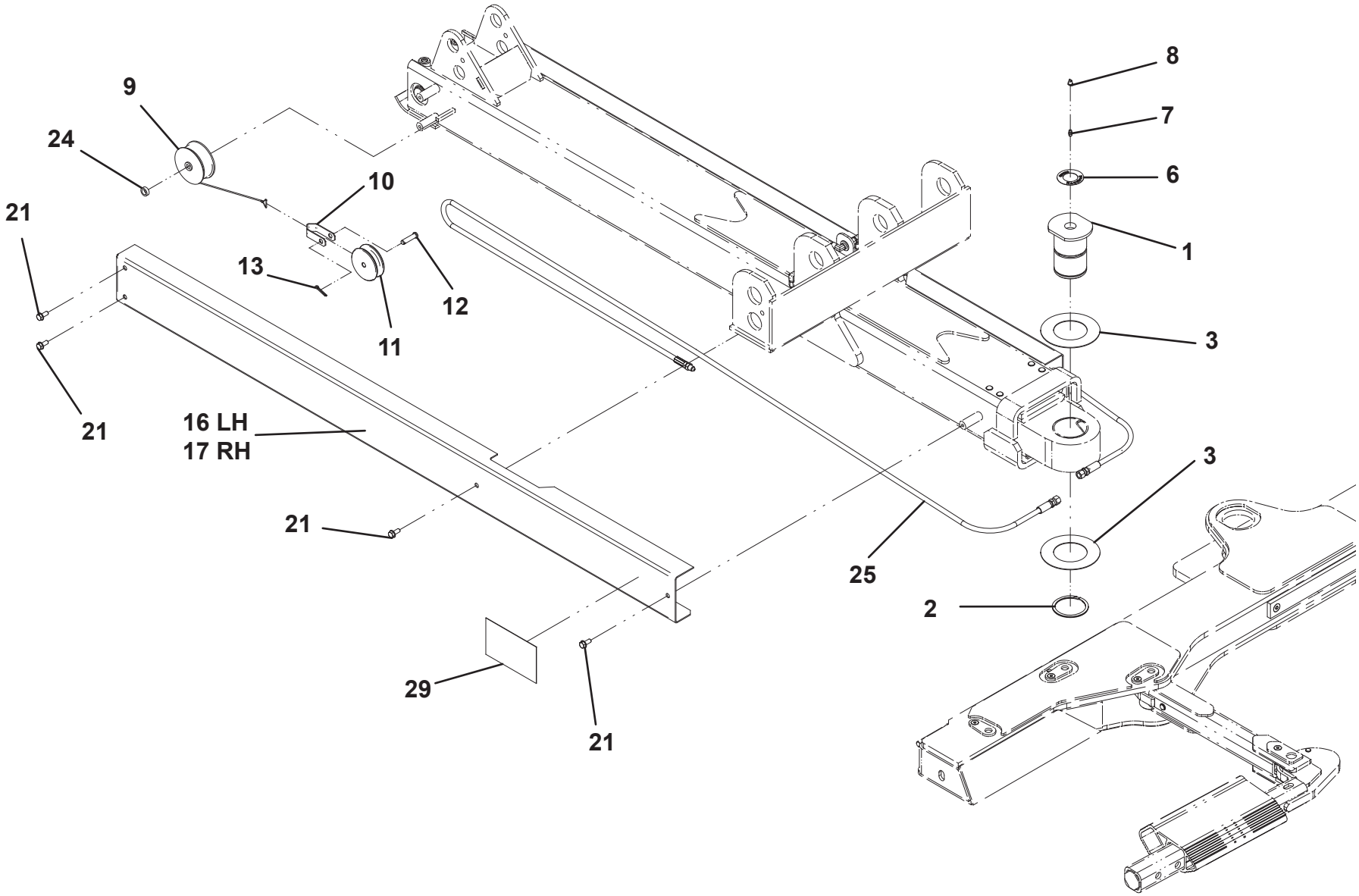

HYDRAULIC WHEEL LIFT GRID

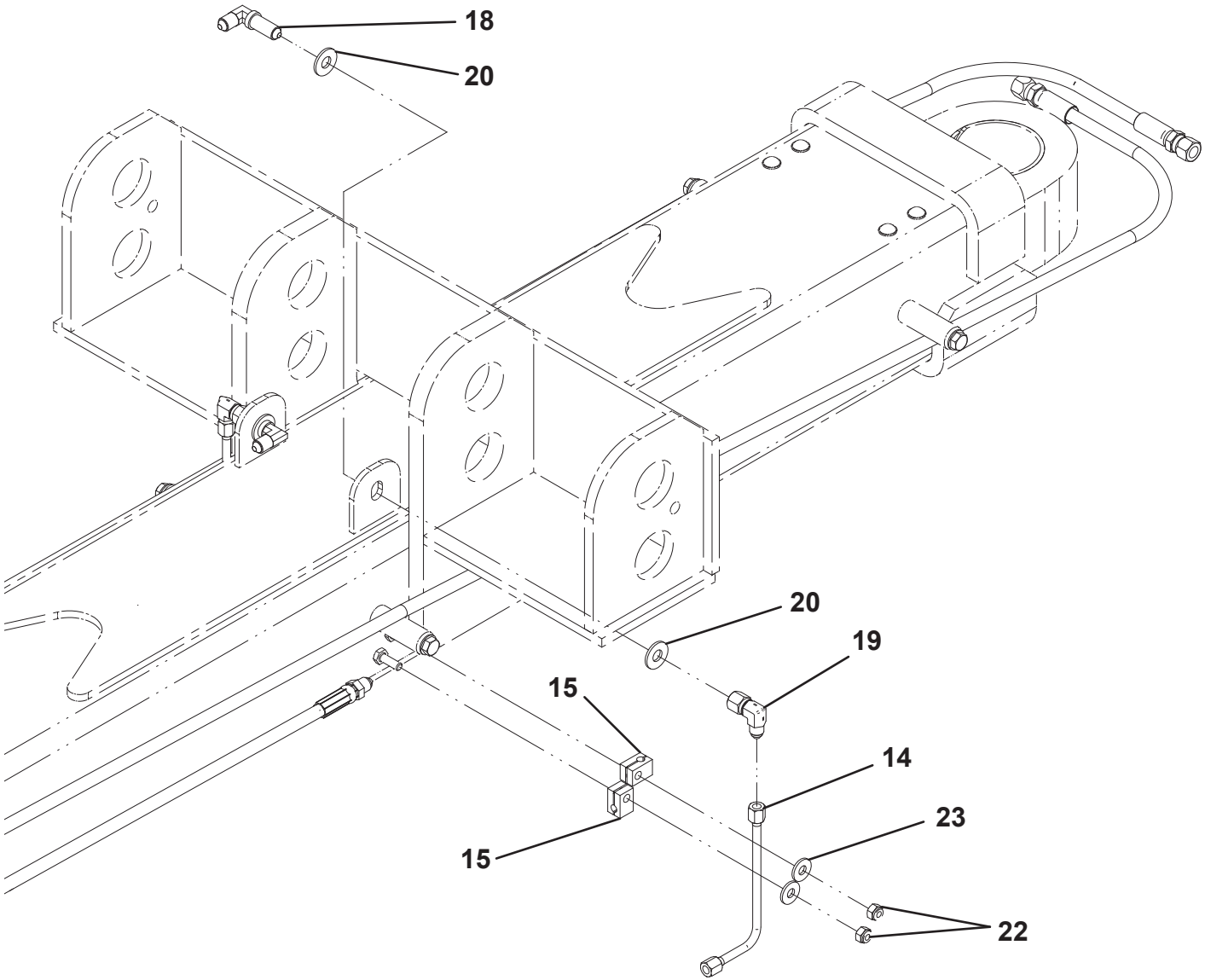

HYDRAULIC WHEEL LIFT GRID

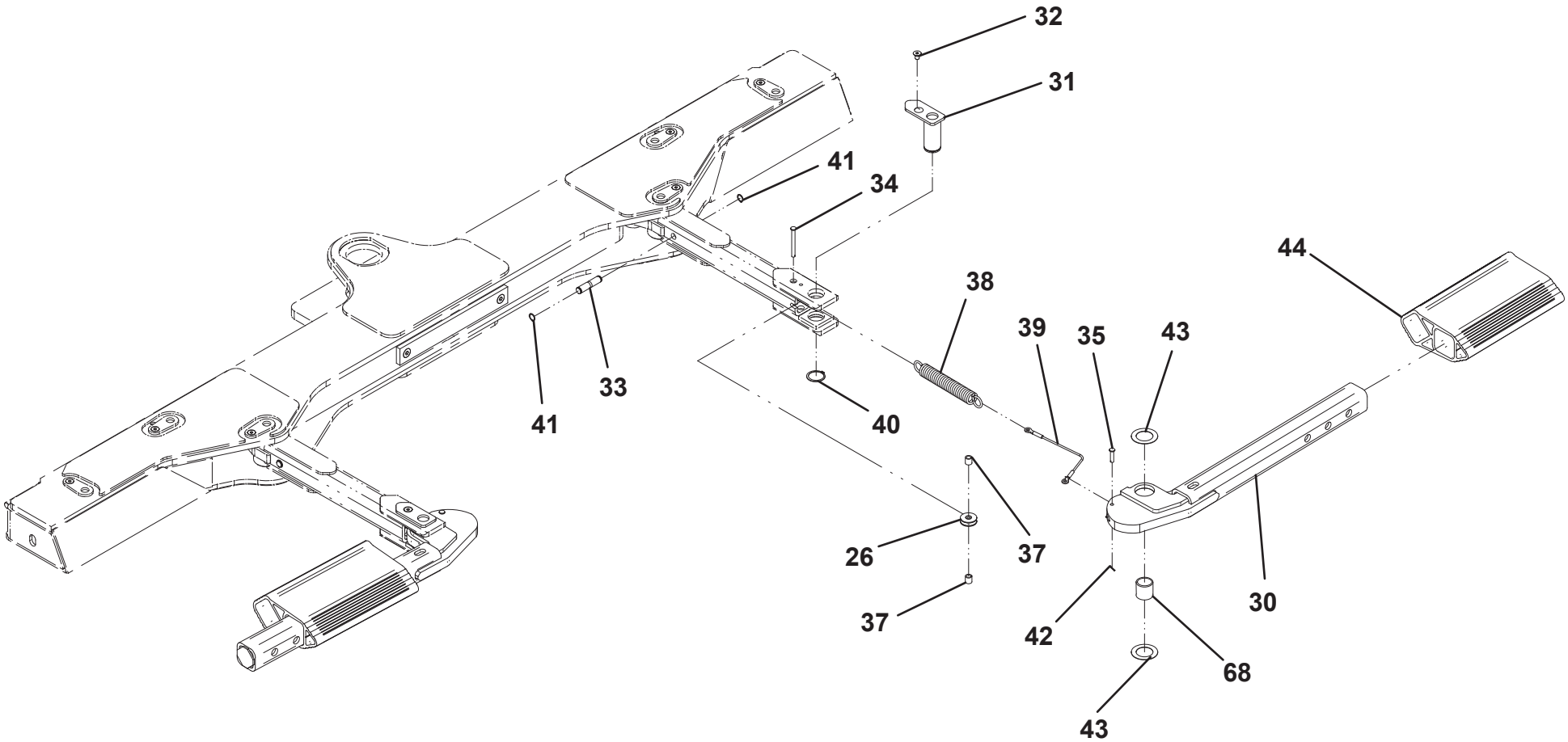

HYDRAULIC WHEEL LIFT GRID

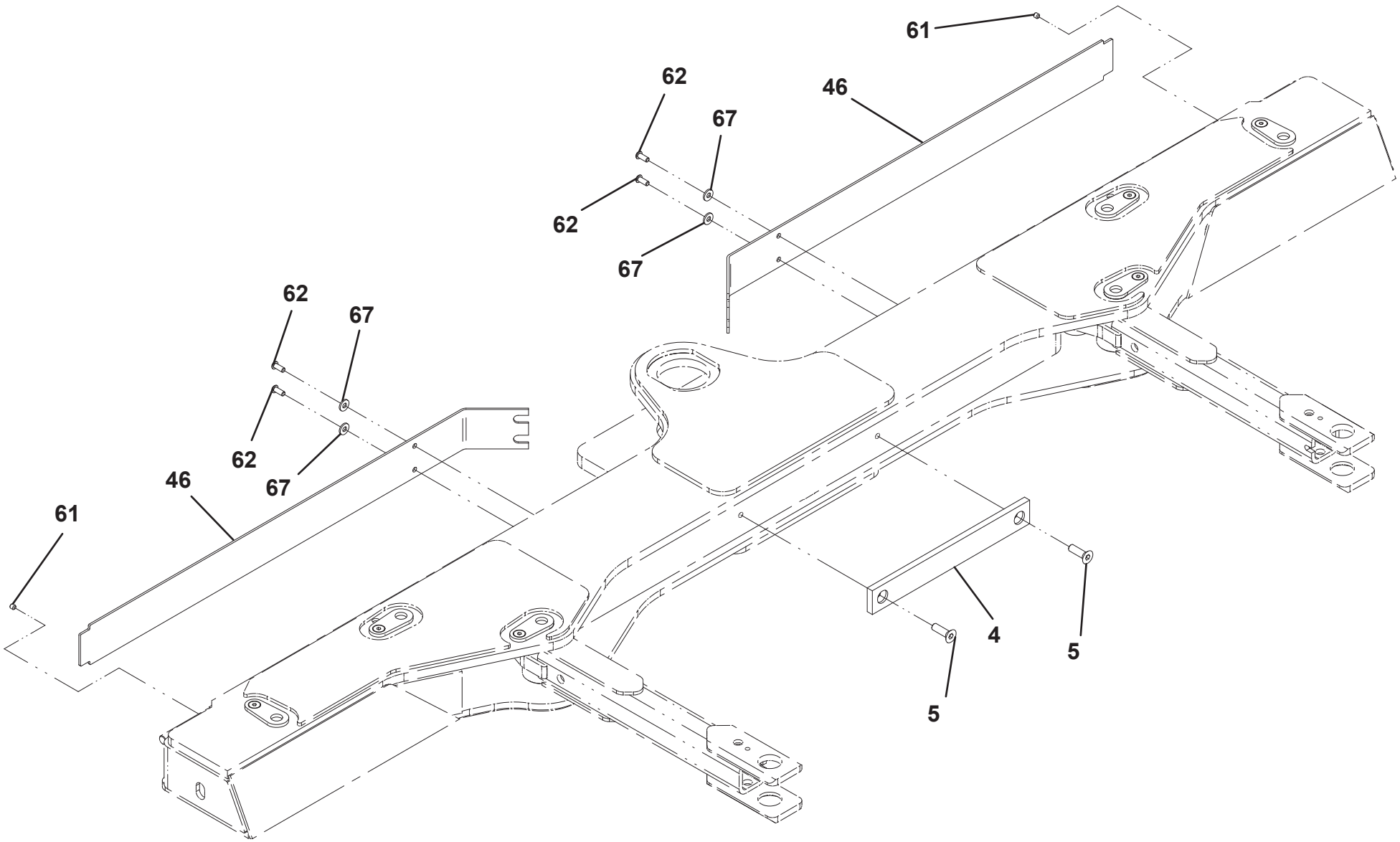

HYDRAULIC WHEEL LIFT GRID

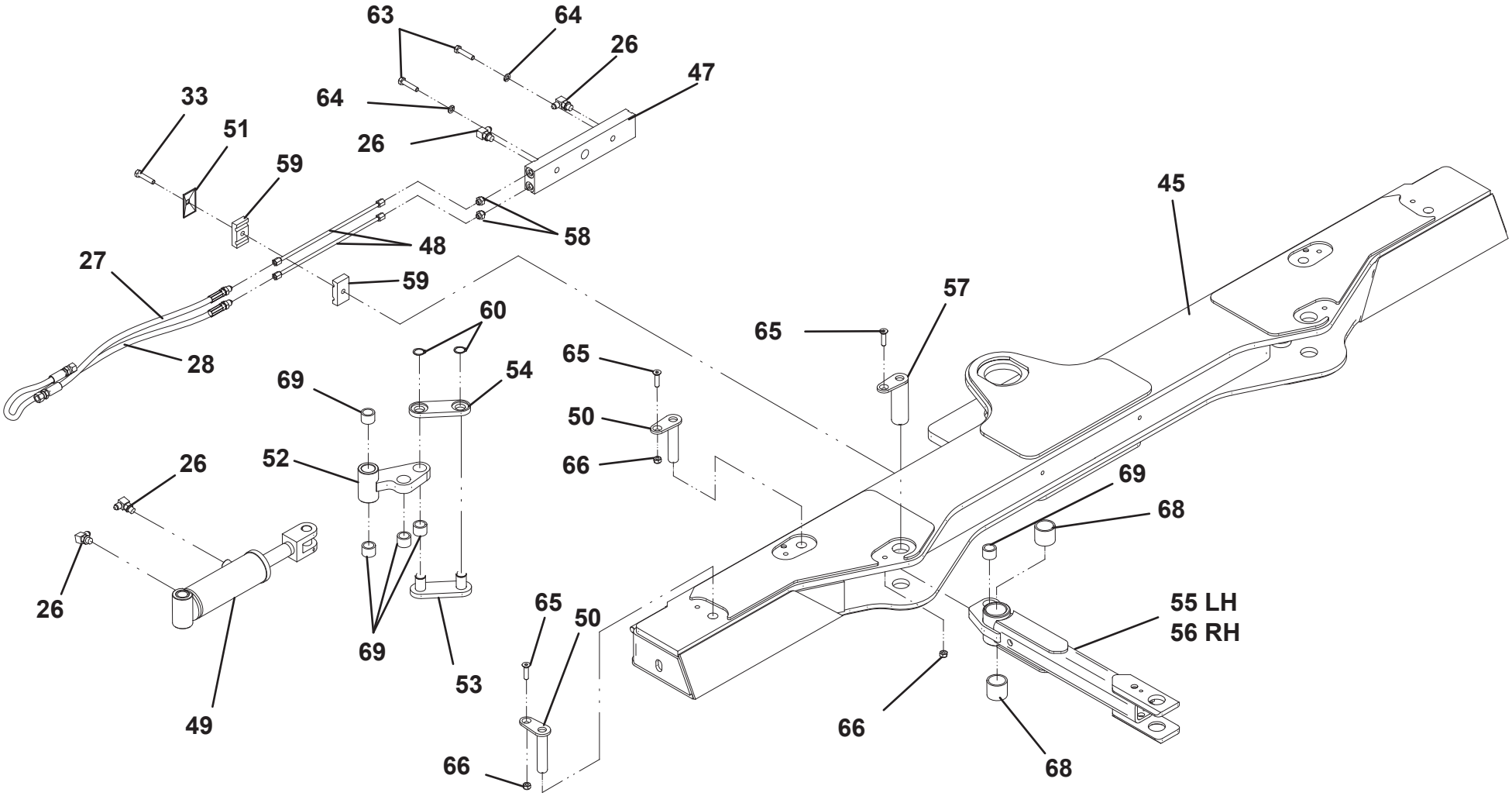

HYDRAULIC REAR DOCK STABILIZER

ITEM	PART NO.	DESCRIPTION	QTY
1	3849000021	Stabilizer Rear Dock Weld	1
2	3320000114	Cylinder	2
3	3691000165	Pin	2
4	3691000166	Pin	2
5	7115160950	Bolt, 0.38”-16NC x 1.13"	4
6	7660162601	Locknut, 0.38”-16NC	4
7	7082000017	Bearing	4

* included in Stabilizer Weld, P/N 3849000021

HYDRAULIC REAR DOCK STABILIZER

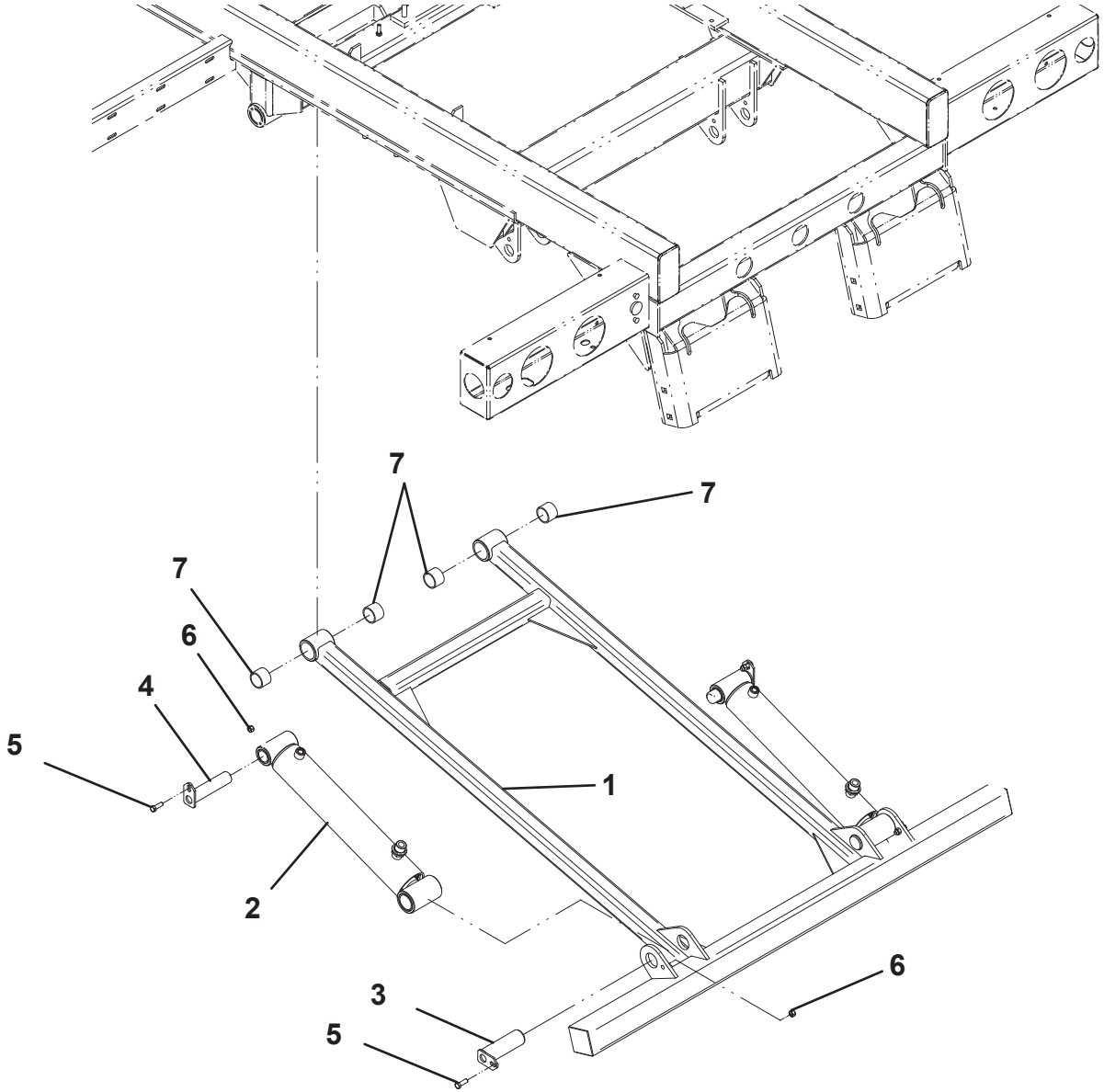

HYDRAULIC REAR DOCK STABILIZER W/ REESE HITCH RECEIVER

ITEM	PART NO.	DESCRIPTION	QTY
1	3849000023	Stabilizer Weld w/ 2.00" Reese	1
	3849000041	Stabilizer Weld w/ 2.50" Reese	
2	3320000114	Cylinder	2
3	3691000165	Pin	2
4	3691000166	Pin	2
5	7115160950	Bolt, 0.38”-16NC x 1.13"	4
6	7660162601	Locknut, 0.38”-16NC	4
7	7796000048	Gasket	1
8	7291000010	Connector	1
9	7114140528	Screw, 0.25”-20NC x 0.63"	2
10	7660142601	Locknut, 0.25”-20NC	2
11	7082000017	Bearing	4

* included in Stabilizer Weld, P/N 3849000023
^ included in Stabilizer Weld, P/N 3849000041

HYDRAULIC REAR DOCK STABILIZER W/ REESE HITCH RECEIVER

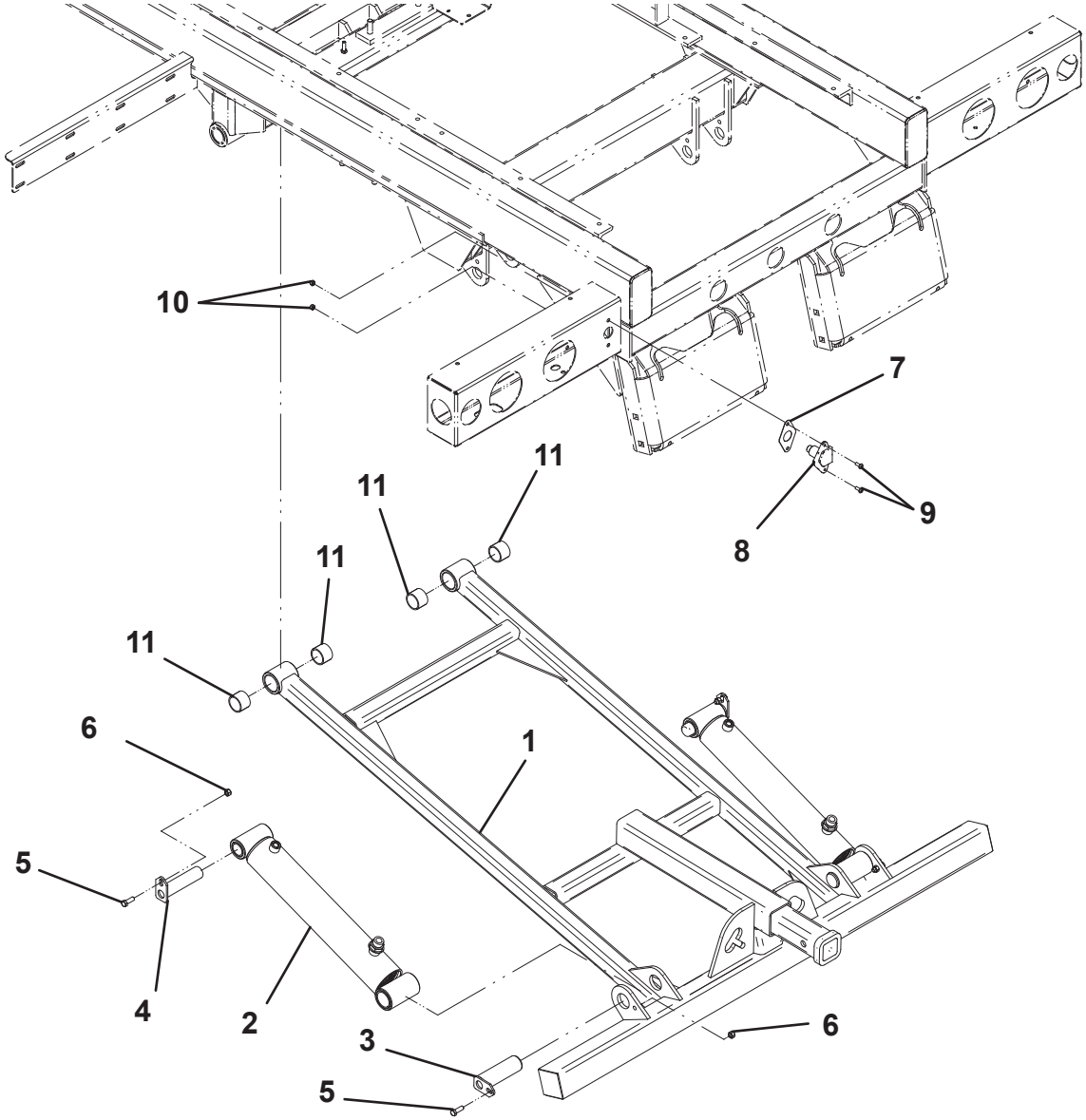

HYDRAULIC REAR DOCK STABILIZER W/ HYD EXT PINTLE HITCH MTG PLATE

ITEM	PART NO.	DESCRIPTION	QTY
1	3849000022	Stabilizer Weld w/ Pintle	1
2	1001127297	Boom Weld	1
3	3691000064	Pin	1
4	7691000001	Pin	1
5	3691000165	Pin	2
6	3691000166	Pin	2
7	7115160950	Bolt, 0.38”-16NC x 1.13"	4
8	7660162601	Locknut, 0.38”-16NC	4
9	7082000017	Bearing	4
10	7796000048	Gasket	1
11	3320000114	Cylinder	2
12	3320000117	Cylinder	1
13	4691000429	Pin	1
14	7754000006	Retaining Ring	4
15	4691000430	Pin	1
16	7291000010	Receptacle	1
17	7114140528	Screw, 0.25”-20NC x 0.63"	2
18	7660142601	Locknut, 0.25”-20NC	2
19	691810	Screw, 0.5”-20 x 1.25"	4
20	4761800	Washer, 0.50" ID	4

* included in Stabilizer Weld, P/N 3849000022

HYDRAULIC REAR DOCK STABILIZER W/ HYD EXT PINTLE HITCH MTG PLATE

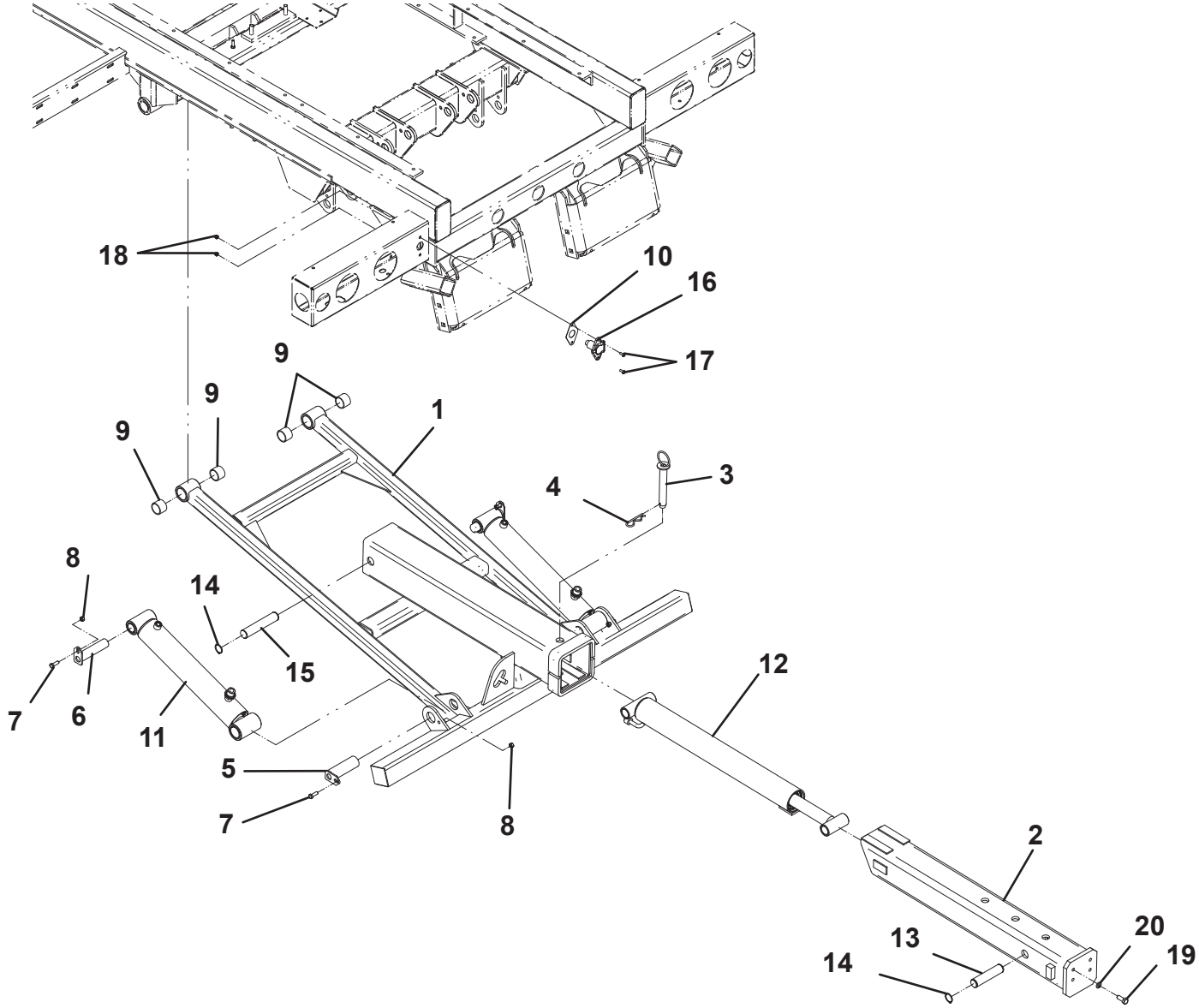

HYDRAULIC REAR DOCK STABILIZER W/ MAN EXT PINTLE HITCH MTG PLATE

ITEM	PART NO.	DESCRIPTION	QTY
1	3849000022	Stabilizer Weld w/ Pintle	1
2	1001127297	Boom Weld	1
3	3691000064	Pin	1
4	7691000001	Pin	1
5	3691000165	Pin	2
6	3691000166	Pin	2
7	7115160950	Bolt, 0.38”-16NC x 1.13"	4
8	7660162601	Locknut, 0.38”-16NC	4
9	7082000017	Bearing	1
10	7796000048	Gasket	1
11	3320000114	Cylinder	2
12	7291000010	Receptacle	1
13	7114140528	Screw, 0.25”-20NC x 0.63"	2
14	7660142601	Locknut, 0.25”-20NC	2
15	691810	Screw, 0.5”-20 x 1.25"	4
16	4761800	Washer, 0.50" ID	4

* included in Stabilizer Weld, P/N 3849000022

HYDRAULIC REAR DOCK STABILIZER W/ MAN EXT PINTLE HITCH MTG PLATE

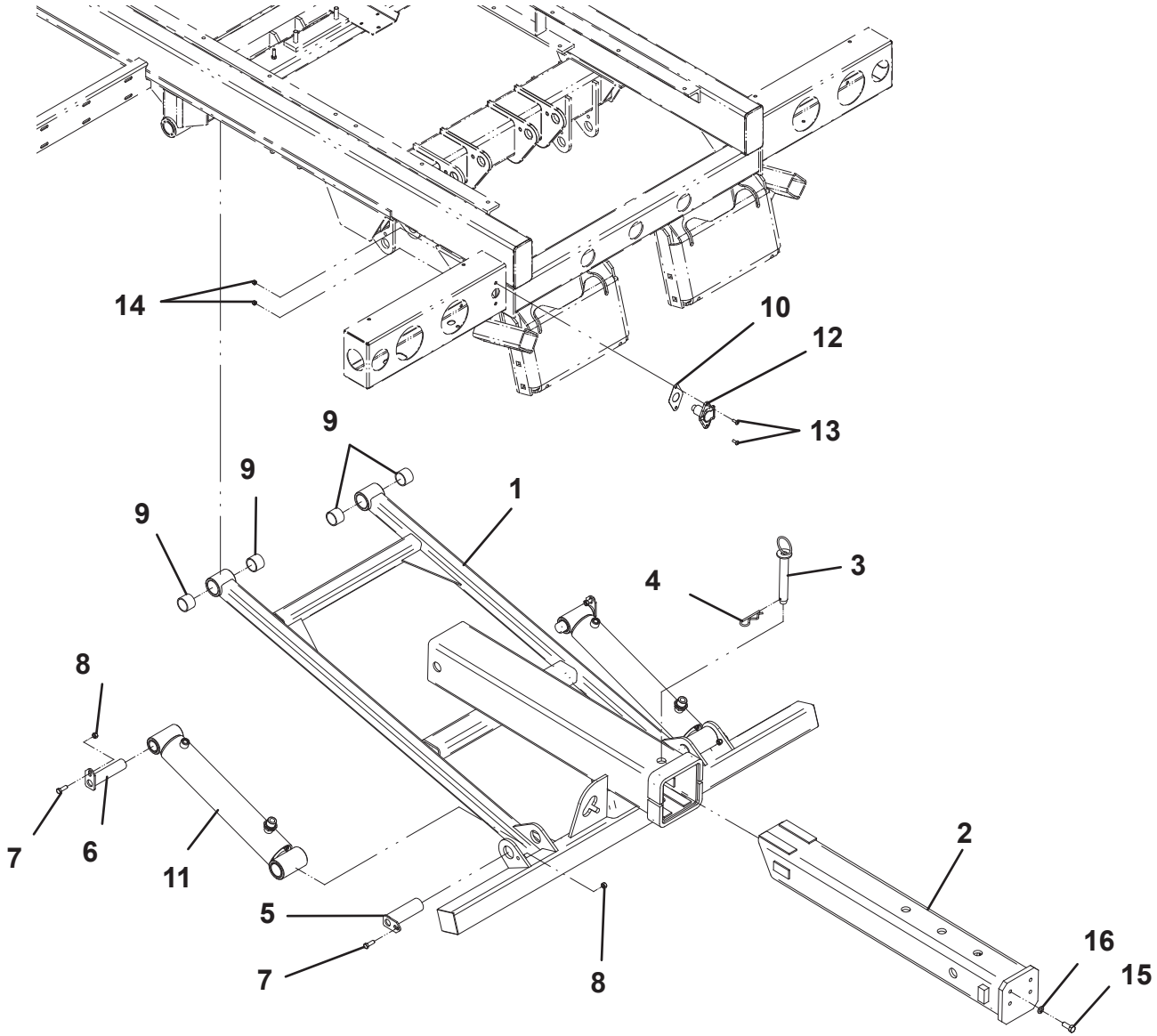

BALL HITCH MOUNTING PLATE - IRL

ITEM	PART NO.	DESCRIPTION	QTY
1	3170000275	Outer Boom Weld	1
2	3911000062	Inner Boom Weld	1
3	3320000116	Cylinder Assembly	1
4	4691000430	Pin	1
5	4691000429	Pin	1
6	7754000006	Retaining Ring	4
7	3691000064	Pin Weld	1
8	7691000001	Hair Pin	1
9	3320000114	Cylinder Assembly	2
10	3691000164	Pin Weld	2
11	7115160950	Capscrew, 0.38”-16NC x 1.12”	5
12	7660162601	Locknut, 0.38”-16NC	5
13	3691000166	Pin Weld	3
14	3020000097	Arm Weld	2
15	7082000017*	Bushing	4
16	7082000018*	Bushing	4
17	7082000016+	Bushing	2
18	7291000010	4-Way Receptacle	1
19	7796000048	Gasket	1
20	7114140528	Screw, 0.25”-20NC x 0.63”	2
21	7660142601	Locknut, 0.25”-20NC	2
22	4330000002	Reflective Tape	2

* included in Arm Weld, P/N 3020000097
+ included in Outer Boom Weld, P/N 3170000275

BALL HITCH MOUNTING PLATE - IRL

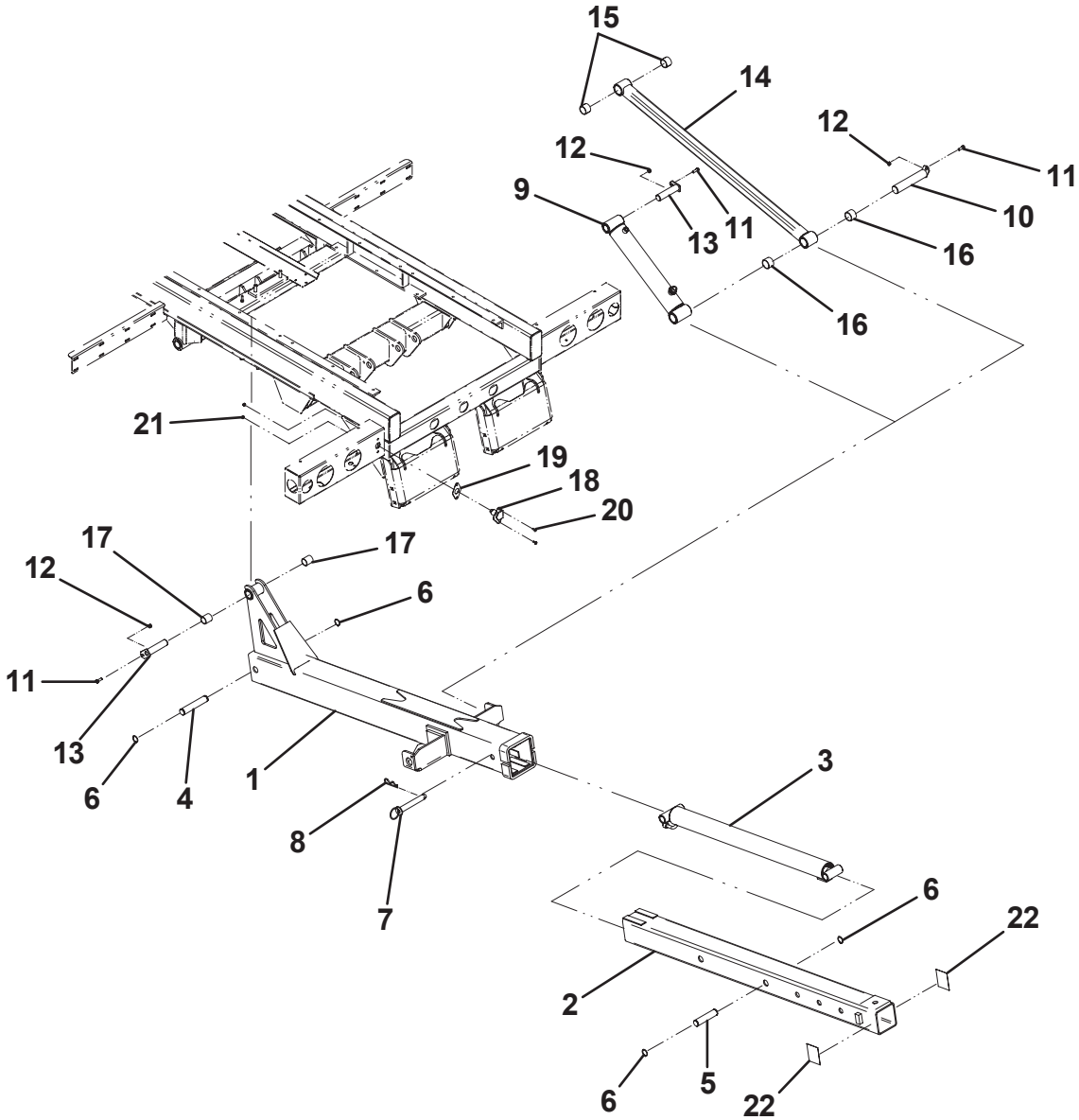

BALL HITCH MOUNTING PLATE - HYDRAULIC EXTEND

ITEM	PART NO.	DESCRIPTION	QTY
1	3170000276	Outer Boom Weld	1
2	3911000062	Inner Boom Weld	1
3	3320000116	Cylinder Assembly	1
4	4691000430	Pin	1
5	4691000429	Pin	1
6	7754000006	Retaining Ring	4
7	3691000166	Pin Weld	1
8	3691000064	Pin Weld	1
9	7115160950	Capscrew, 0.38”-16NC x 1.12”	1
10	7660162601	Locknut, 0.38”-16NC	1
11	3691000097	Pin Weld	1
12	7691000001	Hair Pin	2
13	7082000016*	Bushing	2
14	7291000010	4-Way Receptacle	1
15	7796000048	Gasket	1
16	7114140528	Screw, 0.25”-20NC x 0.63”	2
17	7660142601	Locknut, 0.25”-20NC	2
18	4330000002	Reflective Tape	2

* included in Outer Boom Weld, P/N 3170000276

BALL HITCH MOUNTING PLATE - HYDRAULIC EXTEND

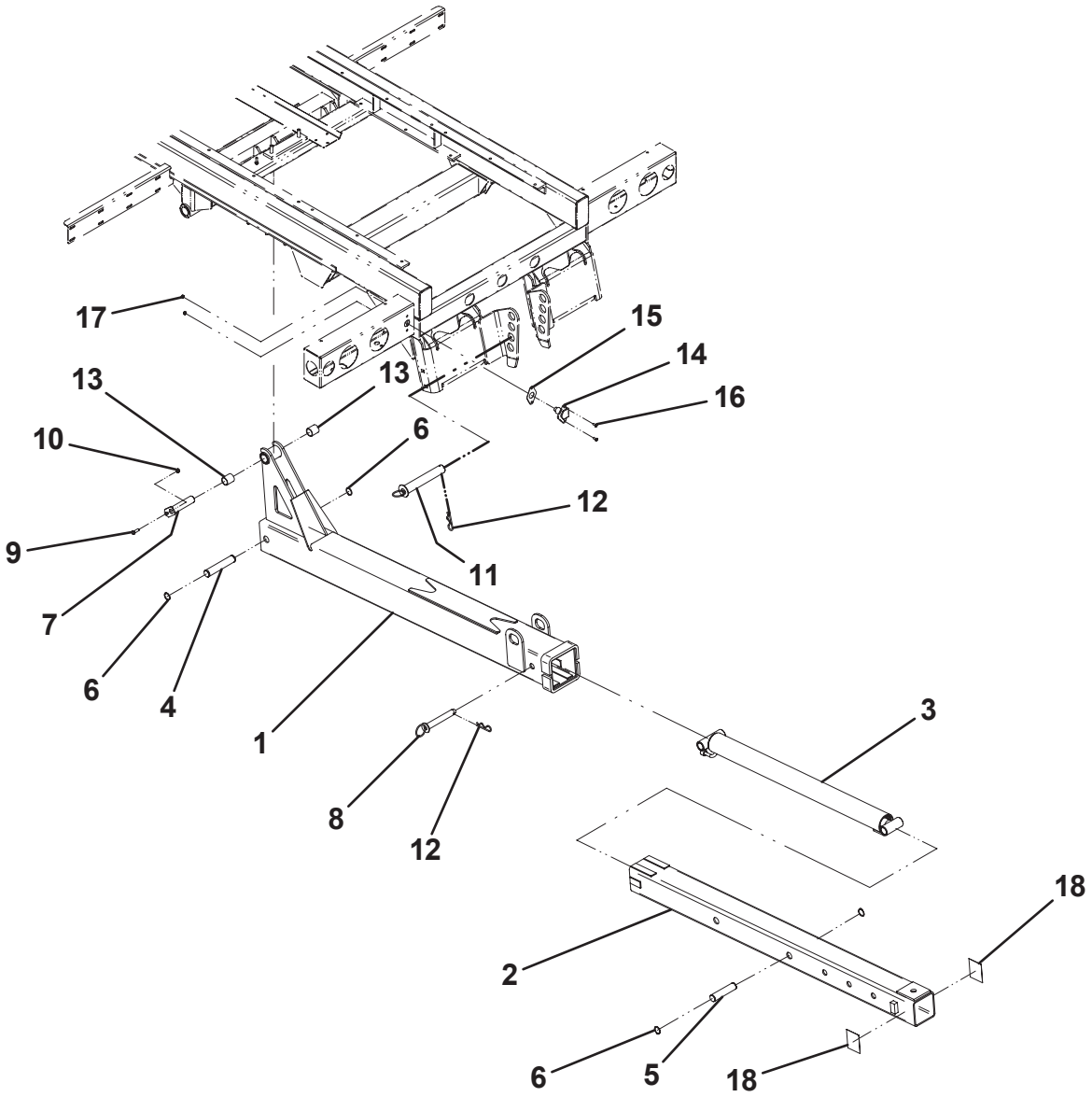

BALL HITCH MOUNTING PLATE - MANUAL EXTEND

ITEM	PART NO.	DESCRIPTION	QTY
1	3170000276	Outer Boom Weld	1
2	3911000062	Inner Boom Weld	1
3	3691000064	Pin Weld	1
4	7691000001	Hair Pin	2
5	3691000166	Pin Weld	1
6	7115160950	Capscrew, 0.38”-16NC x 1.12”	1
7	7660162601	Locknut, 0.38”-16NC	1
8	3691000097	Pin Weld	1
9	7082000016*	Bushing	2
10	7291000010	4-Way Receptacle	1
11	7796000048	Gasket	1
12	7114140528	Screw, 0.25”-20NC x 0.63”	2
13	7660142601	Locknut, 0.25”-20NC	2
14	4330000002	Reflective Tape	2

* included in Outer Boom Weld, P/N 3170000276

BALL HITCH MOUNTING PLATE - MANUAL EXTEND

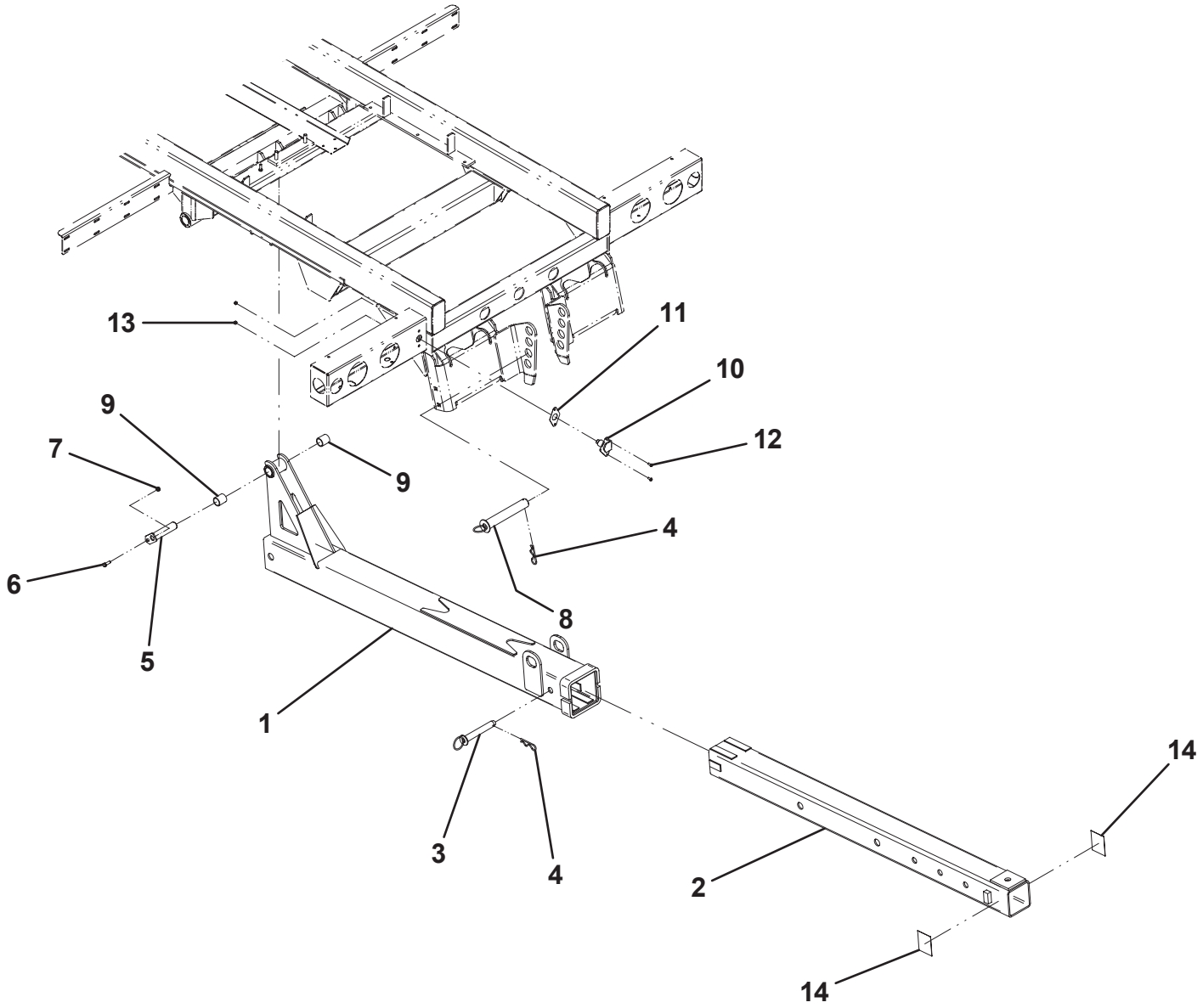

PINTLE HITCH MOUNTING PLATE - IRL

ITEM	PART NO.	DESCRIPTION	QTY
1	3170000275	Outer Boom Weld	1
2	3170000208	Inner Boom Weld	1
3	3320000116	Cylinder Assembly	1
4	4691000430	Pin	1
5	4691000429	Pin	1
6	7754000006	Retaining Ring	4
7	3691000064	Pin Weld	1
8	7691000001	Hair Pin	1
9	3320000114	Cylinder Assembly	2
10	3691000164	Pin Weld	2
11	7115160950	Capscrew, 0.38”-16NC x 1.12	5
12	7660162601	Locknut, 0.38”-16NC	5
13	3691000166	Pin Weld	3
14	3020000097	Arm Weld	2
15	7082000017*	Bushing	4
16	7082000018*	Bushing	4
17	7082000016+	Bushing	2
18	7291000010	4-Way Receptacle	1
19	7796000048	Gasket	1
20	7114140528	Screw, 0.25”-20NC x 0.63”	2
21	7660142601	Locknut, 0.25”-20NC	2
22	4330000002	Reflective Tape	1
23	4330000645	Reflective Tape, LH	1
24	4330000646	Reflective Tape, RH	1

* included in Arm Weld, P/N 3020000097
+ included in Outer Boom Weld, P/N 3170000275

PINTLE HITCH MOUNTING PLATE - IRL

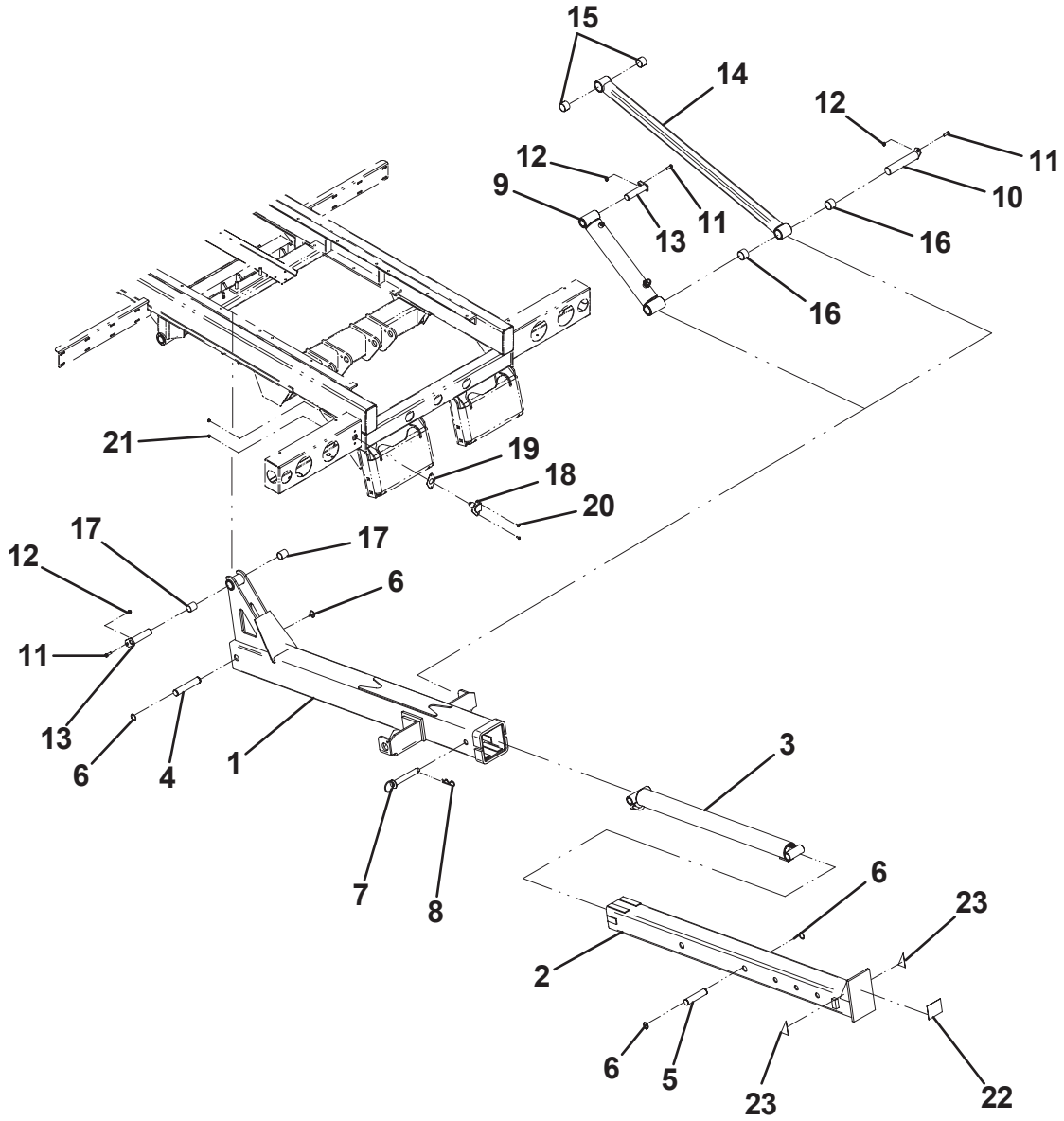

PINTLE HITCH MOUNTING PLATE - HYDRAULIC EXTEND

ITEM	PART NO.	DESCRIPTION	QTY
1	3170000276	Outer Boom Weld	1
2	3170000208	Inner Boom Weld	1
3	3320000116	Cylinder Assembly	1
4	4691000430	Pin	1
5	4691000429	Pin	1
6	7754000006	Retaining Ring	4
7	3691000166	Pin Weld	1
8	3691000064	Pin Weld	1
9	7115160950	Capscrew, 0.38”-16NC x 1.12”	1
10	7660162601	Locknut, 0.38”-16NC	1
11	3691000097	Pin Weld	1
12	7691000001	Hair Pin	2
13	7082000016*	Bushing	2
14	7291000010	4-Way Receptacle	1
15	7796000048	Gasket	1
16	7114140528	Screw, 0.25”-20NC x 0.63”	2
17	7660142601	Locknut, 0.25”-20NC	2
18	4330000002	Reflective Tape	1
19	4330000645	Reflective Tape, LH	1
20	4330000646	Reflective Tape, RH	1

* included in Outer Boom Weld, P/N 3170000276

PINTLE HITCH MOUNTING PLATE - HYDRAULIC EXTEND

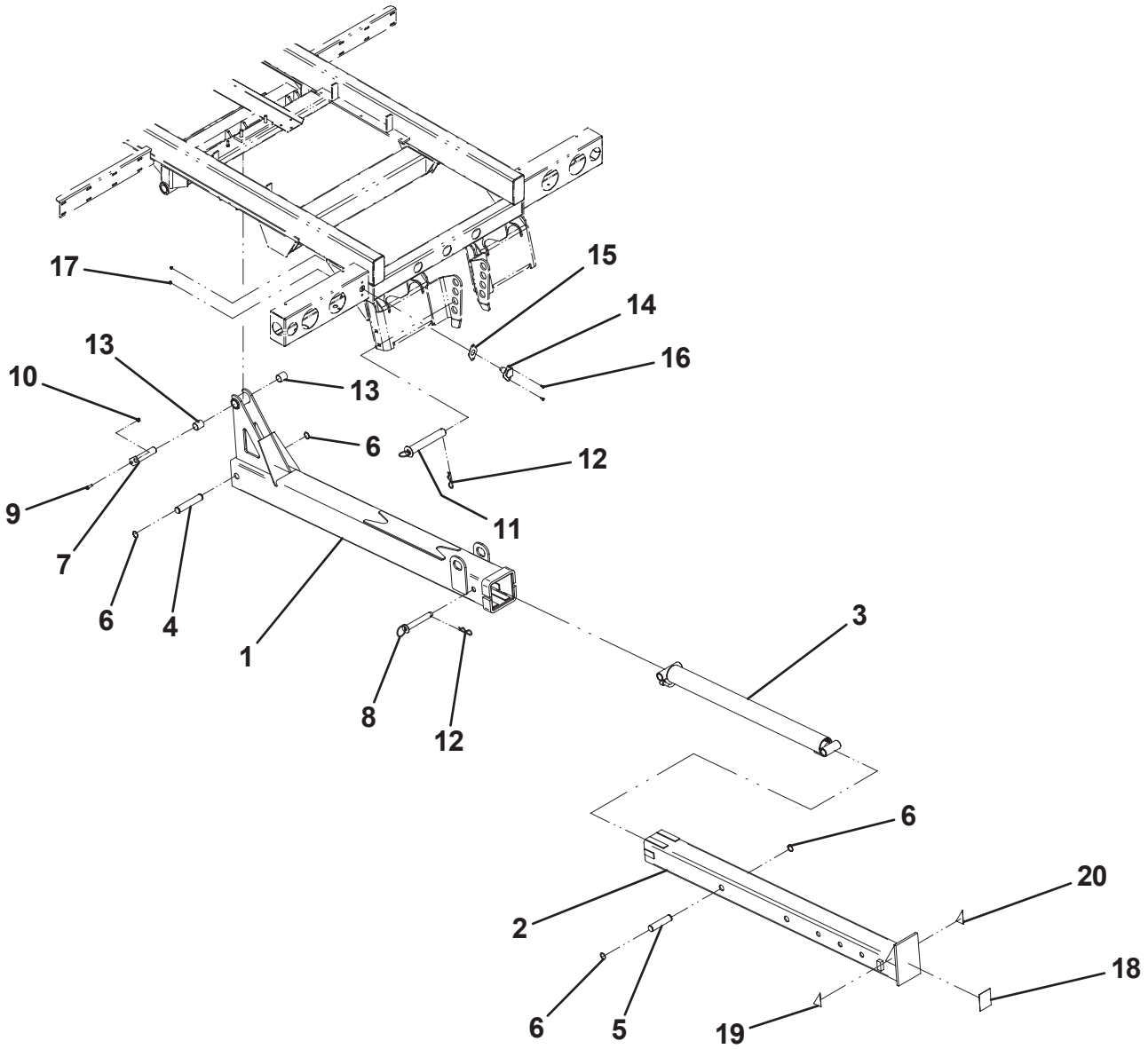

PINTLE HITCH MOUNTING PLATE - MANUAL EXTEND

ITEM	PART NO.	DESCRIPTION	QTY
1	3170000276	Outer Boom Weld	1
2	3170000208	Inner Boom Weld	1
3	3691000064	Pin Weld	1
4	7691000001	Hair Pin	2
5	3691000166	Pin Weld	1
6	7115160950	Capscrew, 0.38”-16NC x 1.12”	1
7	7660162601	Locknut, 0.38”-16NC	1
8	3691000097	Pin Weld	1
9	7082000016*	Bushing	2
10	7291000010	4-Way Receptacle	1
11	7796000048	Gasket	1
12	7114140528	Screw, 0.25”-20NC x 0.63”	2
13	7660142601	Locknut, 0.25”-20NC	2
14	4330000002	Reflective Tape	1
15	4330000645	Reflective Tape, LH	1
16	4330000646	Reflective Tape, RH	1

* included in Outer Boom Weld, P/N 3170000276

PINTLE HITCH MOUNTING PLATE - MANUAL EXTEND

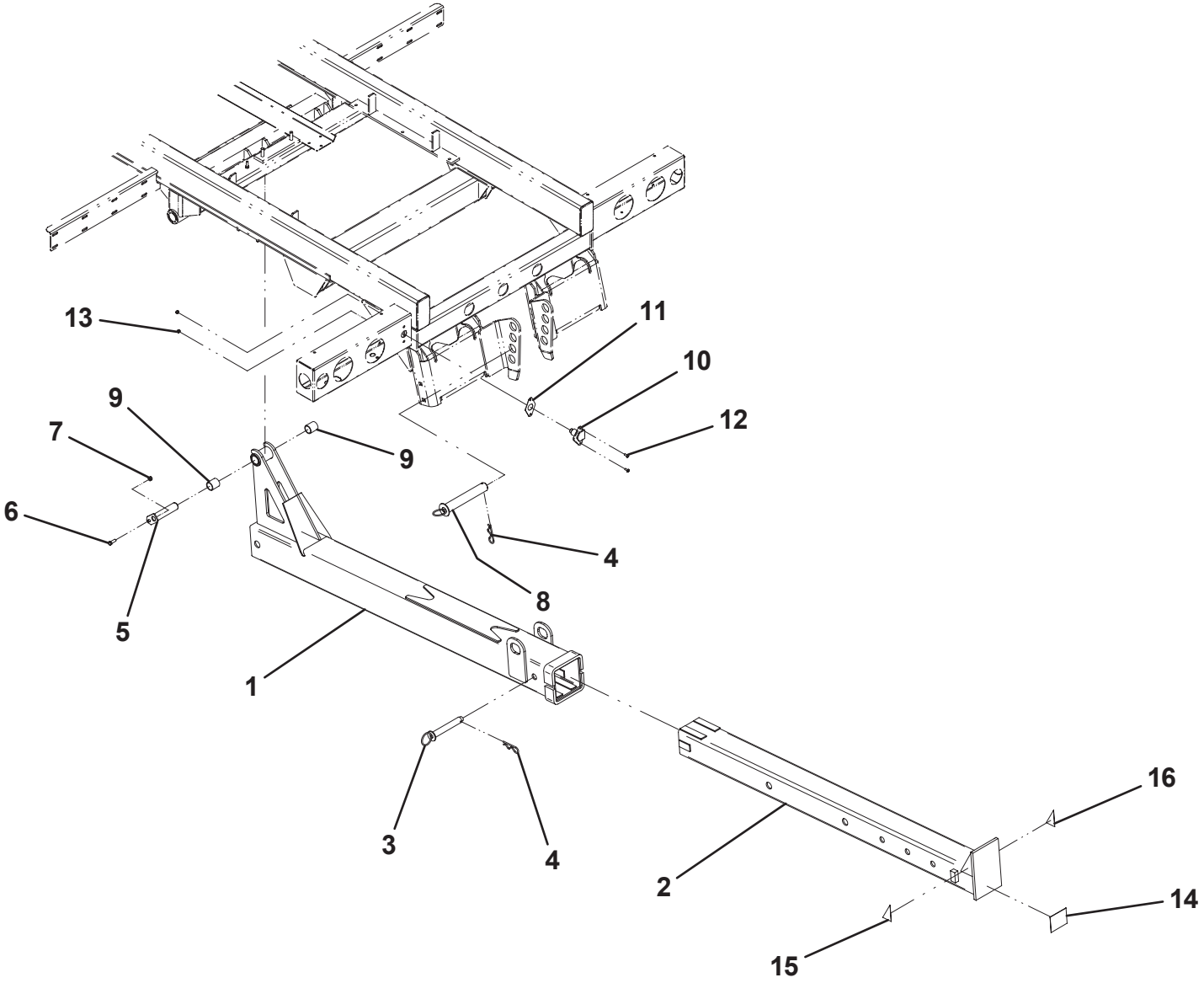

TOWBAR - IRL

ITEM	PART NO.	DESCRIPTION	QTY
1	3170000275	Outer Boom Weld	1
2	3170000048	Inner Boom Weld	1
3	3320000116	Cylinder Assembly	1
4	4691000430	Pin	1
5	4691000429	Pin	1
6	7754000006	Retaining Ring	4
7	7440030000	Grease Fitting	1
8	3320000114	Cylinder Assembly	2
9	3691000164	Pin Weld	2
10	7115160950	Capscrew, 0.38”-16NC x 1.12”	5
11	7660162601	Locknut, 0.38”-16NC	5
12	3691000073	Pin Weld	3
13	3020000097	Arm Weld	2
14	7082000017*	Bushing	4
15	7082000018*	Bushing	4
16	7082000016+	Bushing	2
17	3556000023	Tow Hitch Weld	1
18	4120000008	Capscrew, 1.50”-12NF x 6.38”	1
19	7912000011	Tube Rubber	2
20	7291000010	4-Way Receptacle	1
21	7796000048	Gasket	1
22	7114140528	Screw, 0.25”-20NC x 0.63”	2
23	7660142601	Locknut, 0.25”-20NC	2
24	7330000419	Reflective Tape	2
25	4330000001	Reflective Tape	1

* included in Arm Weld, P/N 3020000097
+ included in Outer Boom Weld, P/N 3170000275

TOWBAR - IRL

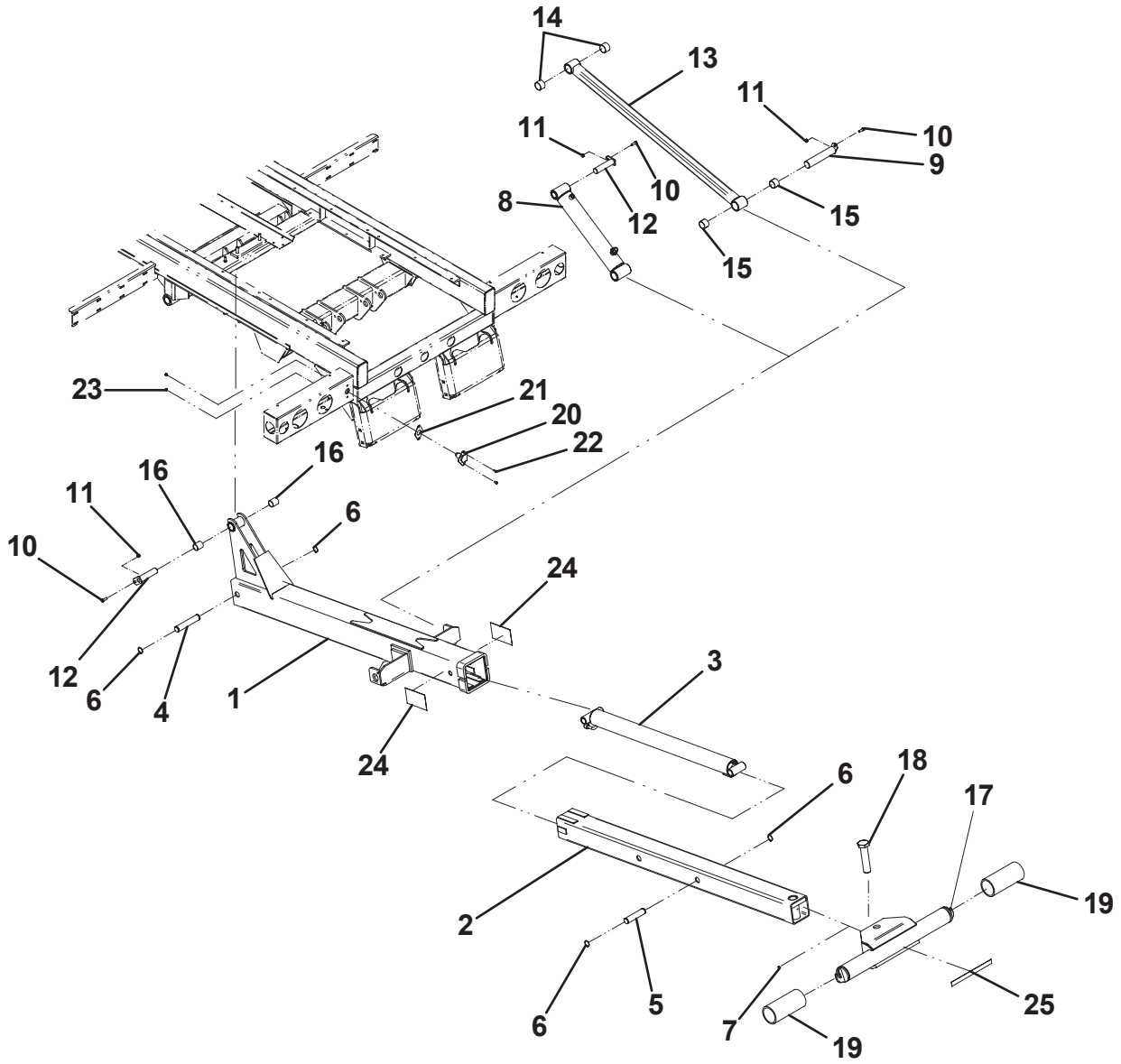
14
13
11
10
9
11
10
8
12
15
15
23
21
20
22
16
16
11
6
10
24
12
6
4
1
3
24
6
18
17
19
2
6
5
7
19
25

TOWBAR - HYDRAULIC EXTEND

ITEM	PART NO.	DESCRIPTION	QTY
1	3170000276	Outer Boom Weld	1
2	3170000048	Inner Boom Weld	1
3	3320000116	Cylinder Assembly	1
4	4691000430	Pin	1
5	4691000429	Pin	1
6	7754000006	Retaining Ring	4
7	7440030000	Grease Fitting	1
8	3691000073	Pin Weld	1
9	7115160950	Capscrew, 0.38”-16NC x 1.12”	1
10	7660162601	Locknut, 0.38”-16NC	1
11	3691000097	Pin Weld	1
12	7691000001	Hair Pin	1
13	7082000016*	Bushing	2
14	3556000023	Tow Hitch Weld	1
15	4120000008	Capscrew, 1.50”-12NF x 6.38”	1
16	7912000011	Tube Rubber	2
17	7291000010	4-Way Receptacle	1
18	7796000048	Gasket	1
19	7114140528	Screw, 0.25”-20NC x 0.63”	2
20	7660142601	Locknut, 0.25”-20NC	2
21	4330000002	Reflective Tape	2
22	4330000001	Reflective Tape	1

* included in Outer Boom Weld, P/N 3170000276

TOWBAR - HYDRAULIC EXTEND

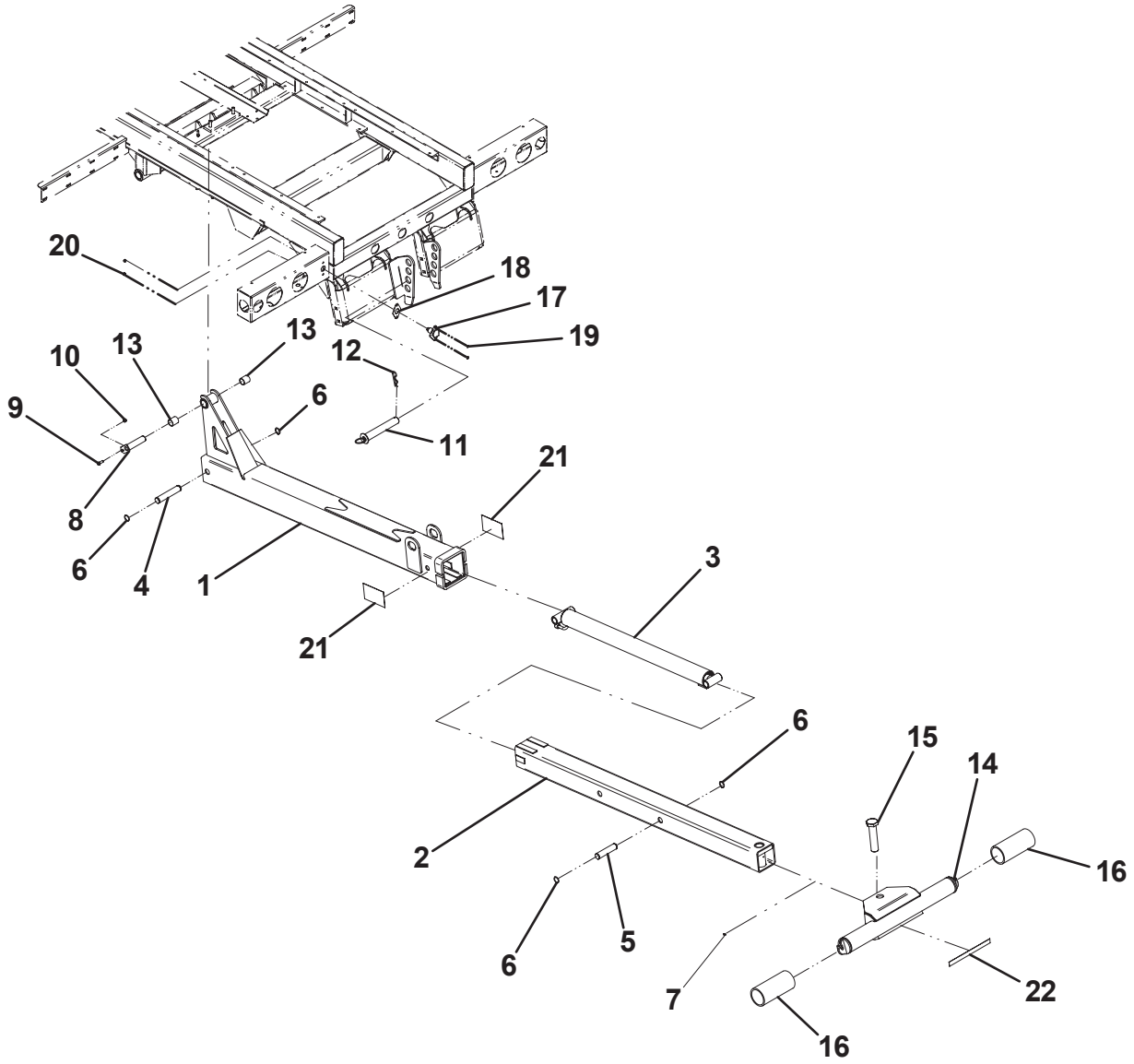

AUTOGRID CYLINDER ASSEMBLY - P/N 7320000064

ITEM	PART NO.	DESCRIPTION	QTY
1	7027336	Gland	1
2	7027338	Piston	1
3	70050632	Rod Assembly	1
4	70050633	Barrel Assembly	1
5	70050634	Retention Pin	1
6	70050635*	O-Ring	1
7	70050636*	O-Ring	1
8	70050637*	Rod Seal	1
9	70050638*	Backup Ring	1
10	70050639*	Rod Wiper	1
11	70050640*	Wear Ring	1
12	70050641	Plug	2
13	70050642	Locknut, 0.75”-16	1
14	70050643	Piston Seal	1
15	70050644	Roll Pin	1
16	7082000026	Bearing	2
17	7027341	Seal Kit	1

* included in seal kit #7027341

AUTOGRID CYLINDER ASSEMBLY - P/N 7320000064

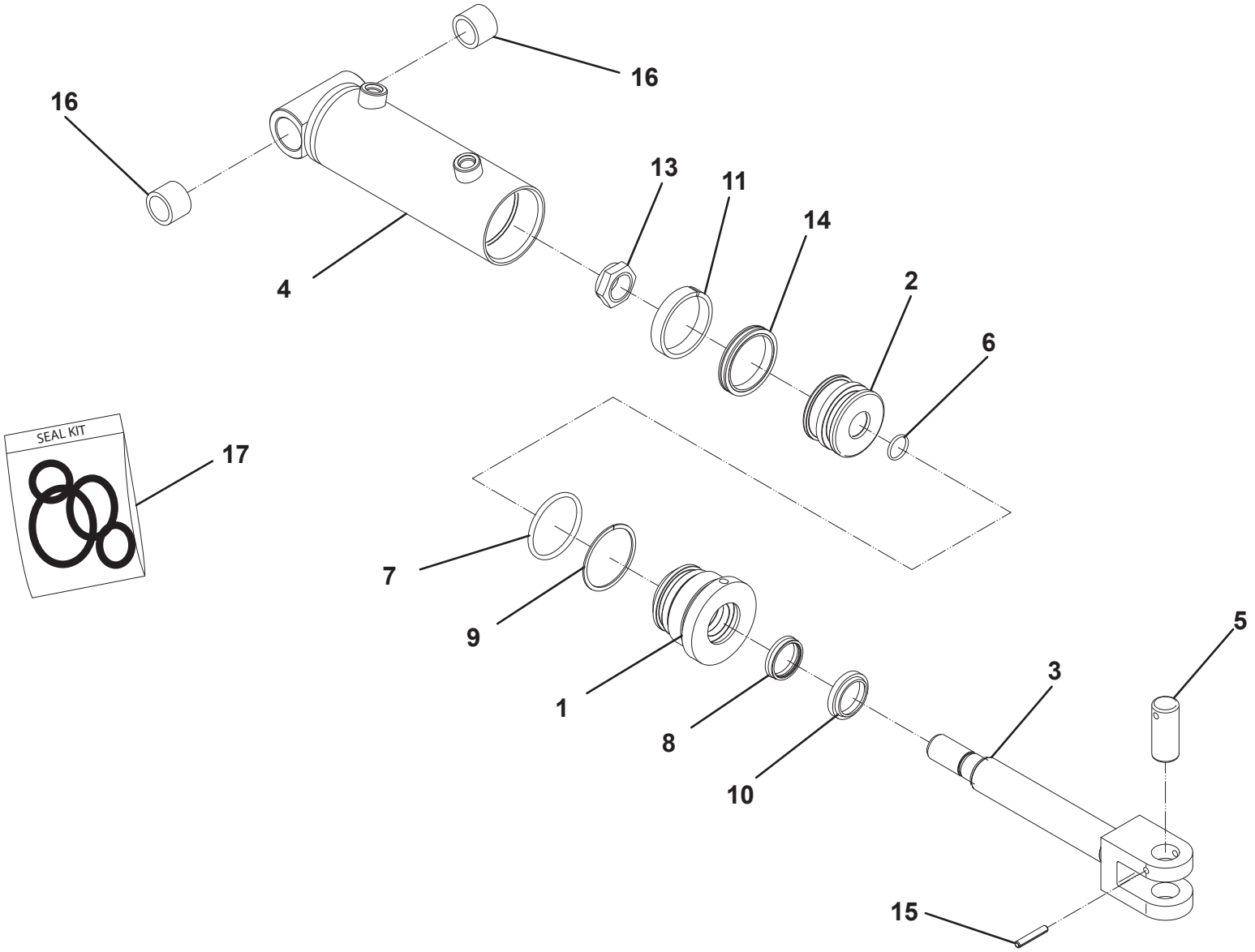

IRL CYLINDER ASSEMBLY - P/N 3320000114

ITEM	PART NO.	DESCRIPTION	QTY
1	3071000105	Barrel Weld	1
2	3763000118	Rod Weld	1
3	4698000007*	Piston	1
4	7754000003*#	Wear Ring	2
5	7796000063*#	Piston Locking “T” Seal	1
6	7755224609*#	Back-Up Ring	2
7	7755224000*#	“O” Ring	1
8	4553000008^	Head	1
9	7755334000^#	“O” Ring	1
10	7755334609^#	Back-Up Ring	1
11	7754000004^#	Wear Ring	1
12	7796000024^#	Rod Seal	1
13	7796000008^#	Rod Wiper Seal	1
14	7754000002#	Retaining Ring	1
15	7754000026#	Retaining Ring	1
16	7661000034	Locknut	1
17	7082000016	Bearing	2
18	7082000018	Bearing	2

* included in Piston Assembly, P/N 3698000001
^ included in Head Assembly, P/N 3553000011
# available only in Service Kit #7577250024

IRL CYLINDER ASSEMBLY - P/N 3320000114

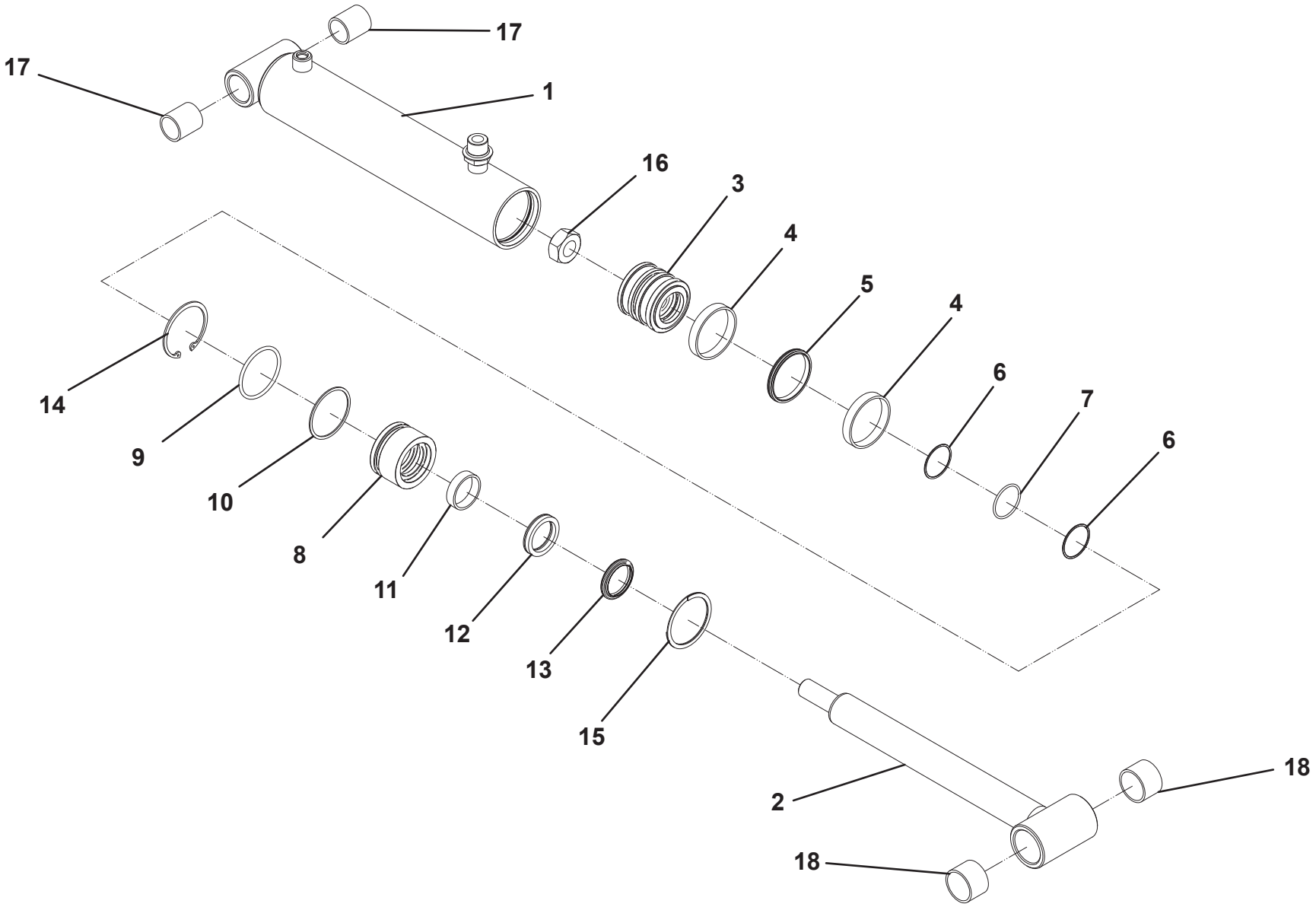

WHEEL LIFT EXTEND CYLINDER ASSEMBLY - P/N 3320000115

ITEM	PART NO.	DESCRIPTION	QTY
1	3071000106	Barrel Weld	1
2	3763000119	Rod Weld	1
3	4698000015*	Piston	1
4	7754000053*#	Wear Ring	2
5	7796000067*#	Piston Locking “T” Seal	1
6	7755222609*#	Back-Up Ring	2
7	7755222000*#	“O” Ring	1
8	4553000016^	Head	1
9	7755330000^#	“O” Ring	1
10	7755330609^#	Back-Up Ring	1
11	7754000054^#	Wear Ring	1
12	7796000045^#	Rod Seal	1
13	7796000046^#	Rod Wiper Seal	1
14	7754000051#	Retaining Ring	2
15	7661000034	Locknut	1

* included in Piston Assembly, P/N 3698000006
^ included in Head Assembly, P/N 3553000016
# available only in Service Kit #7577250206

WHEEL LIFT EXTEND CYLINDER ASSEMBLY - P/N 3320000115

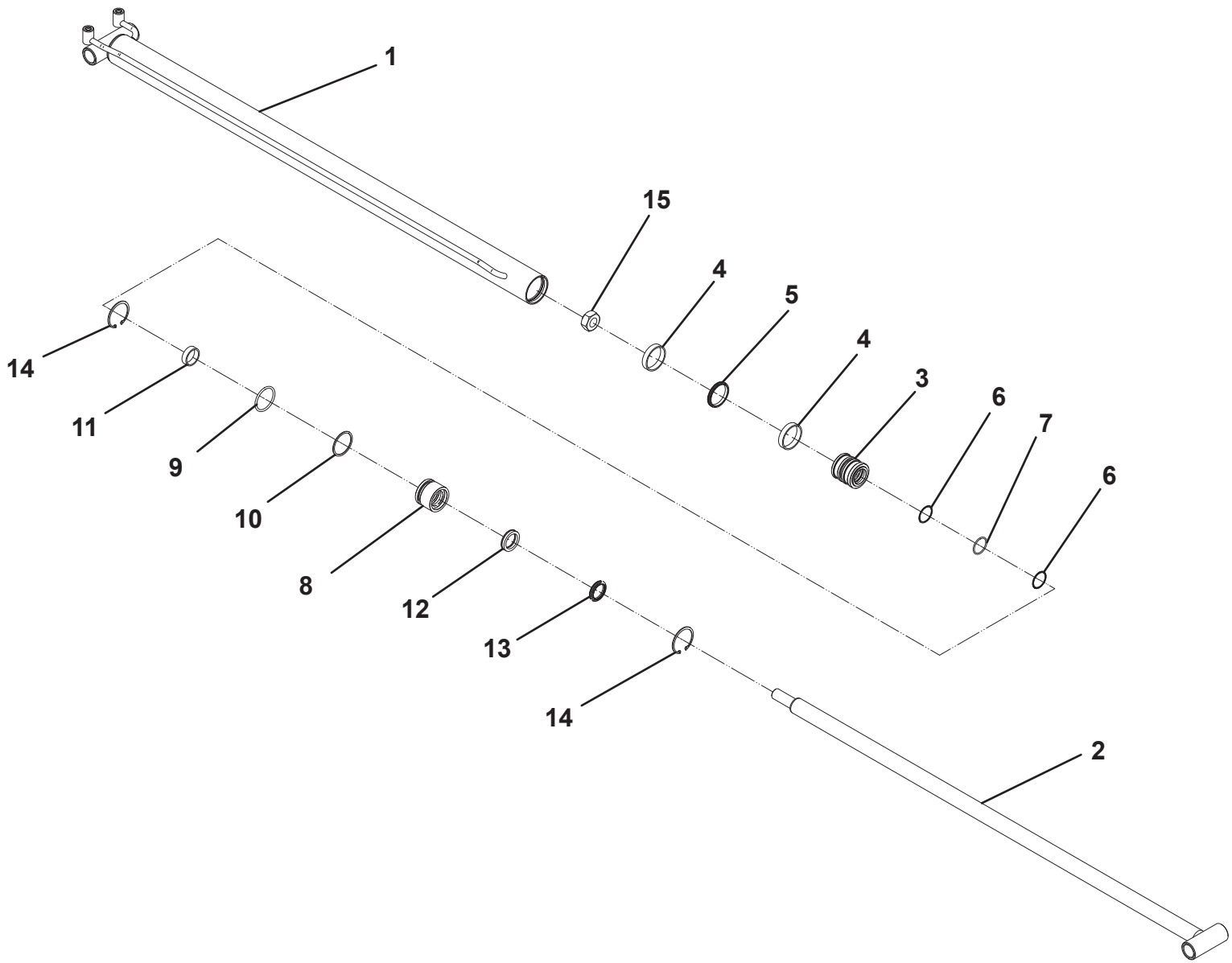

TOW OPTION EXTEND CYLINDER ASSEMBLY - P/N 3320000116

ITEM	PART NO.	DESCRIPTION	QTY
1	3071000107	Barrel Weld	1
2	3763000120	Rod Weld	1
3	4698000007*	Piston	1
4	7754000003*#	Wear Ring	2
5	7796000063*#	Piston Locking “T” Seal	1
6	7755224609*#	Back-Up Ring	2
7	7755224000*#	“O” Ring	1
8	4553000008^	Head	1
9	7755334000^#	“O” Ring	1
10	7755334609^#	Back-Up Ring	1
11	7754000004^#	Wear Ring	1
12	7796000024^#	Rod Seal	1
13	7796000008^#	Rod Wiper Seal	1
14	7754000002#	Retaining Ring	1
15	7754000026#	Retaining Ring	1
16	7661000034	Locknut	1

* included in Piston Assembly, P/N 3698000001
^ included in Head Assembly, P/N 3553000011
# available only in Service Kit #7577250024

TOW OPTION EXTEND CYLINDER ASSEMBLY - P/N 3320000116

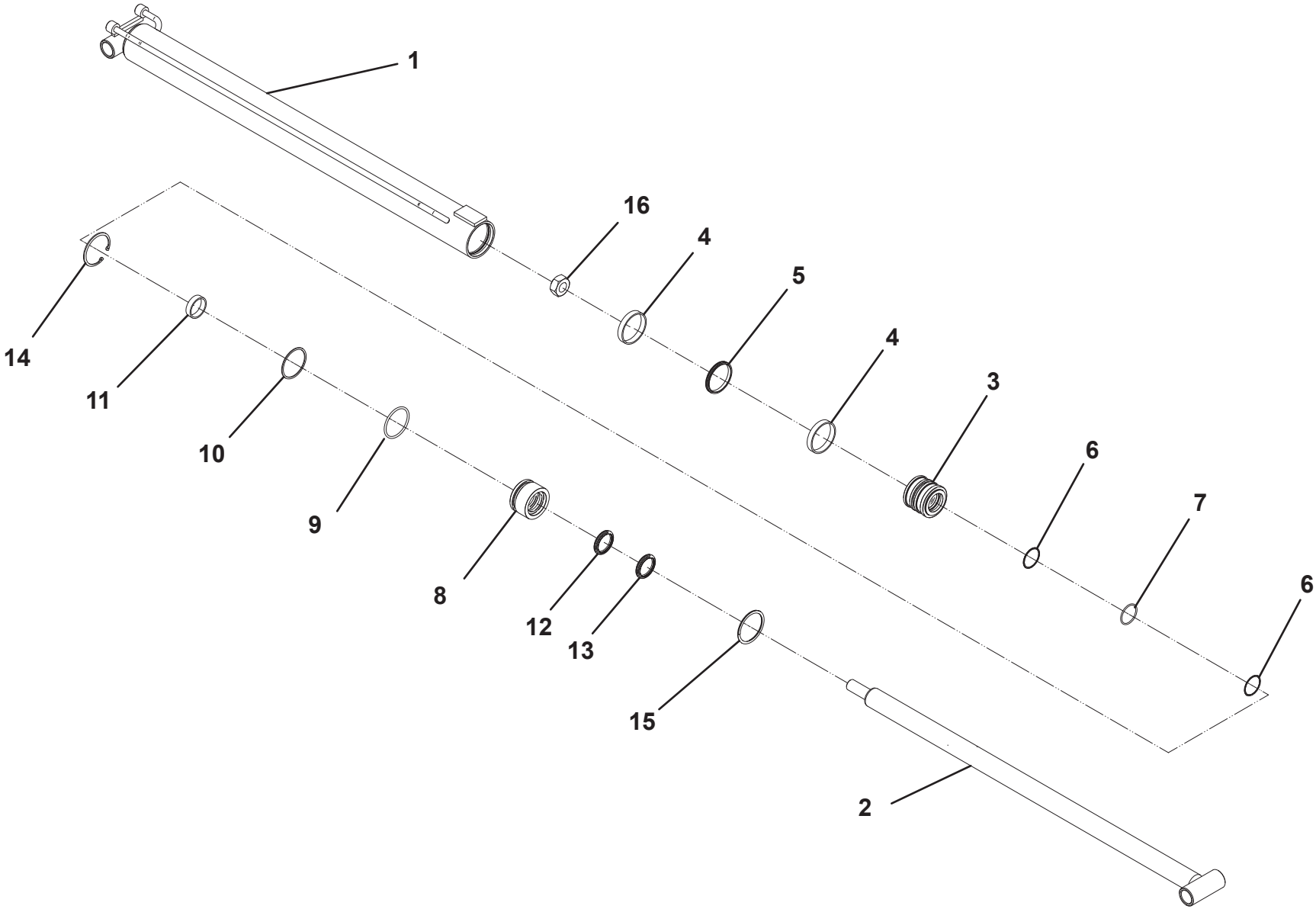

TOW OPTION EXTEND CYLINDER ASSEMBLY - P/N 3320000117

ITEM	PART NO.	DESCRIPTION	QTY
1	3071000108	Barrel Weld	1
2	3763000121	Rod Weld	1
3	4698000007*	Piston	1
4	7754000003*#	Wear Ring	2
5	7796000063*#	Piston Locking “T” Seal	1
6	7755224609*#	Back-Up Ring	2
7	7755224000*#	“O” Ring	1
8	4553000008^	Head	1
9	7755334000^#	“O” Ring	1
10	7755334609^#	Back-Up Ring	1
11	7754000004^#	Wear Ring	1
12	7796000024^#	Rod Seal	1
13	7796000008^#	Rod Wiper Seal	1
14	7754000002#	Retaining Ring	1
15	7754000026#	Retaining Ring	1
16	7661000034	Locknut	1

* included in Piston Assembly, P/N 3698000001
^ included in Head Assembly, P/N 3553000011
# available only in Service Kit #7577250024

TOW OPTION EXTEND CYLINDER ASSEMBLY - P/N 3320000117

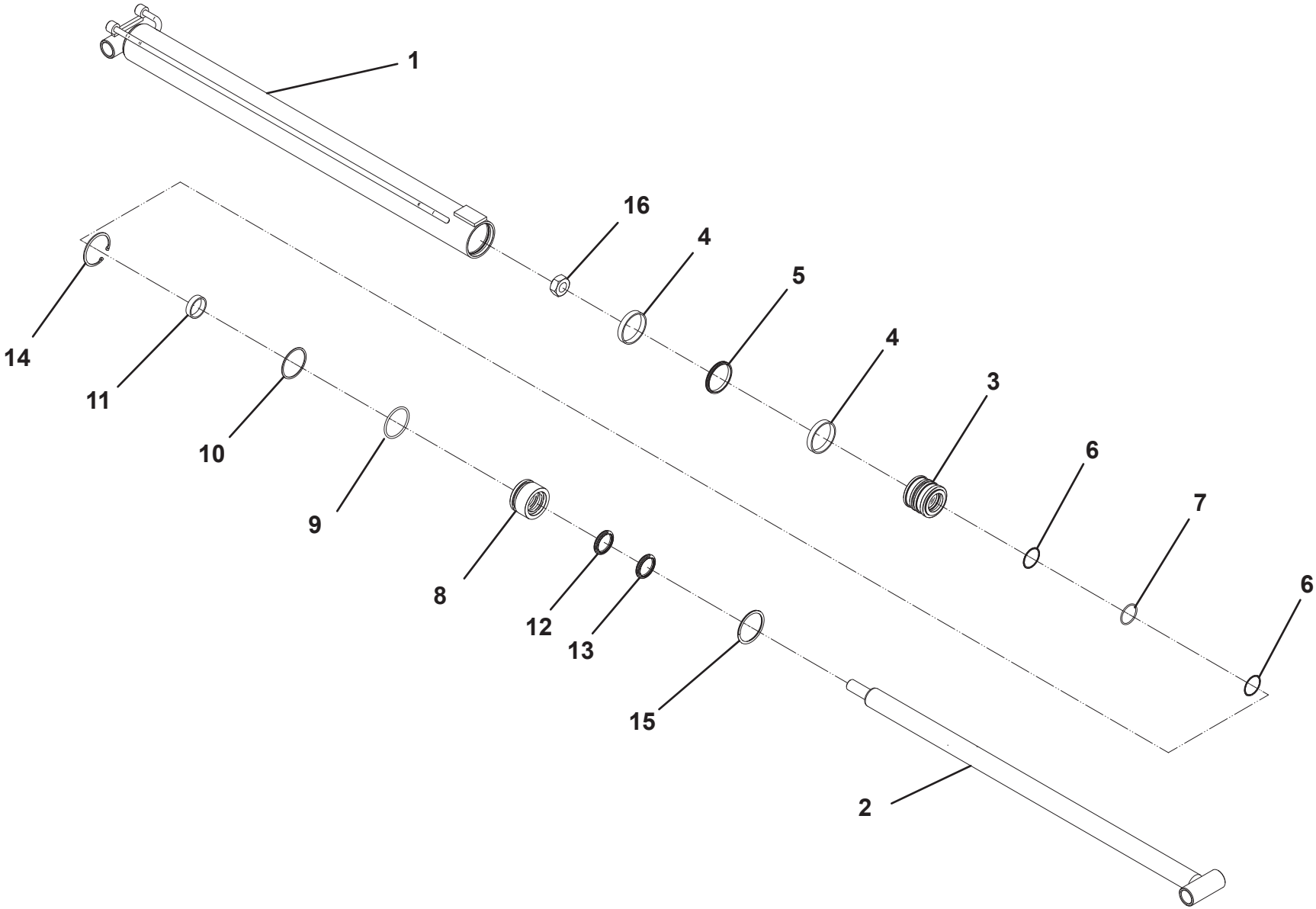

ZOD CYLINDER ASSEMBLY - P/N 3320000118

ITEM	PART NO.	DESCRIPTION	QTY
1	3071000109	Barrel Weld	1
2	3763000122	Rod Weld	1
3	4698000015*	Piston	1
4	7754000053*#	Wear Ring	2
5	7796000067*#	Piston Locking “T” Seal	1
6	7755224609*#	Back-Up Ring	2
7	7755224000*#	“O” Ring	1
8	4553000016^	Head	1
9	7755330000^#	“O” Ring	1
10	7755330609^#	Back-Up Ring	1
11	7754000054^#	Wear Ring	1
12	7796000045^#	Rod Seal	1
13	7796000046^#	Rod Wiper Seal	1
14	7754000051#	Retaining Ring	2
15	7661000034	Locknut	1
16	7082000016	Bearing	4

* included in Piston Assembly, P/N 3698000006
^ included in Head Assembly, P/N 3553000016
# available only in Service Kit #7577250206

ZOD CYLINDER ASSEMBLY - P/N 3320000118

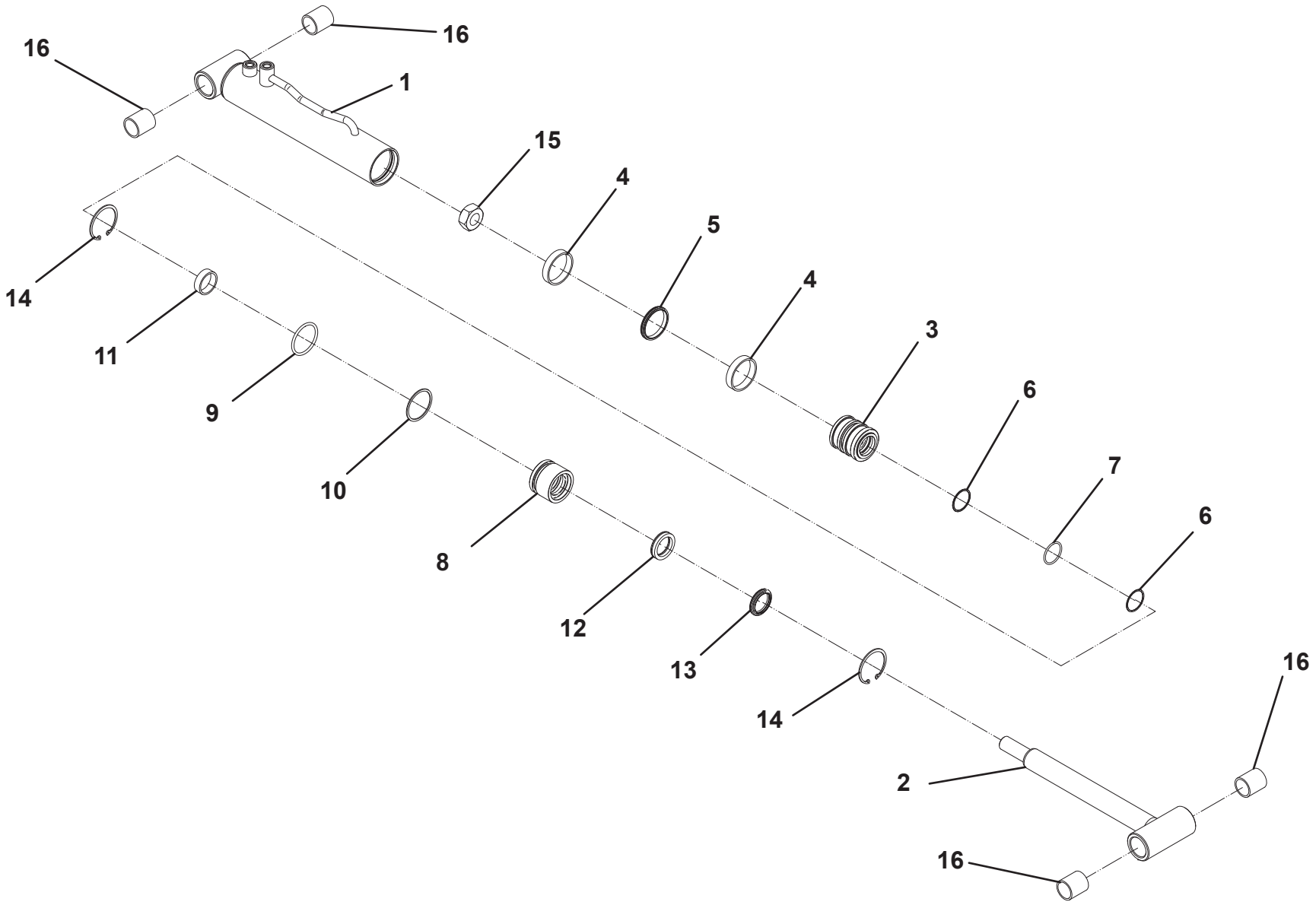

TILT CYLINDER ASSEMBLY (INBOARD) - P/N 3320000120

ITEM	PART NO.	DESCRIPTION	QTY
1	3071000111	Barrel Weld	1
2	3763000123	Rod Weld	1
3	4698000015*	Piston	1
4	7754000053*#	Wear Ring	2
5	7796000067*#	Piston Locking “T” Seal	1
6	7755222609*#	Back-Up Ring	2
7	7755222000*#	“O” Ring	1
8	4553000016^	Head	1
9	7755330000^#	“O” Ring	1
10	7755330609^#	Back-Up Ring	1
11	7754000054^#	Wear Ring	1
12	7796000045^#	Rod Seal	1
13	7796000046^#	Rod Wiper Seal	1
14	7754000051#	Retaining Ring	2
15	7661000011	Locknut	1
16	7082000016	Bearing	4

* included in Piston Assembly, P/N 3698000006
^ included in Head Assembly, P/N 3553000016
# available only in Service Kit #7577250206

TILT CYLINDER ASSEMBLY (INBOARD) - P/N 3320000120

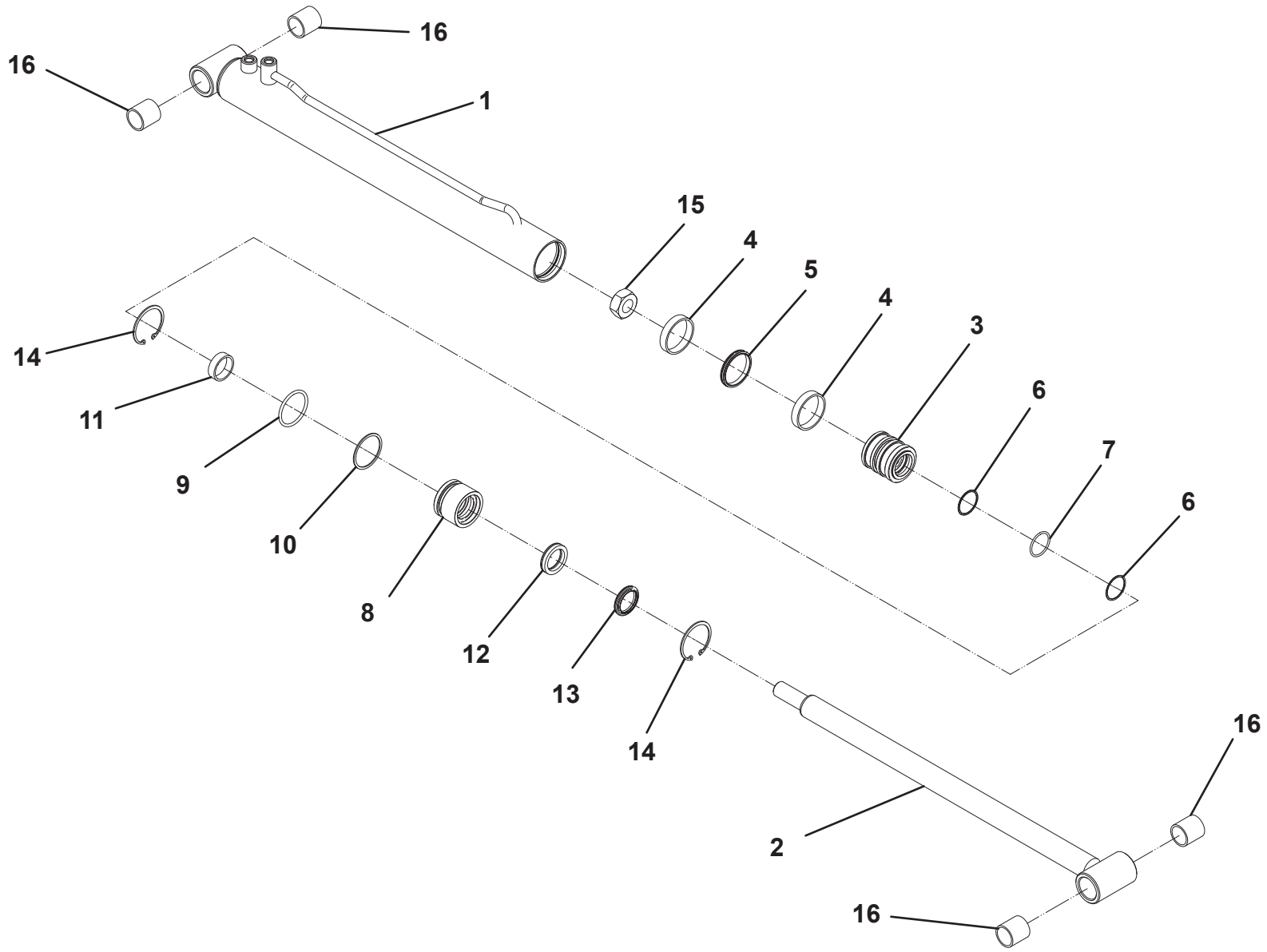

TILT CYLINDER ASSEMBLY - P/N 3320000122

ITEM	PART NO.	DESCRIPTION	QTY
1	3071000117	Barrel Weld	1
2	3763000127	Rod Weld	1
3	4698000007*	Piston	1
4	7754000003*#	Wear Ring	2
5	7796000063*#	Piston Locking “T” Seal	1
6	7755224609*#	Back-Up Ring	2
7	7755224000*#	“O” Ring	1
8	4553000008^	Head	1
9	7755330008^#	“O” Ring	1
10	7755334609^#	Back-Up Ring	1
11	7754000004^#	Wear Ring	1
12	7796000045^#	Rod Seal	1
13	7796000024^#	Rod Wiper Seal	1
14	7754000002#	Retaining Ring	2
15	7754000026#	Locknut	1
16	7661000034	Locknut	1
17	7082000016	Bearing	4

* included in Piston Assembly, P/N 3698000001
^ included in Head Assembly, P/N 3553000011
# available only in Service Kit #7577250024

TILT CYLINDER ASSEMBLY - P/N 3320000122

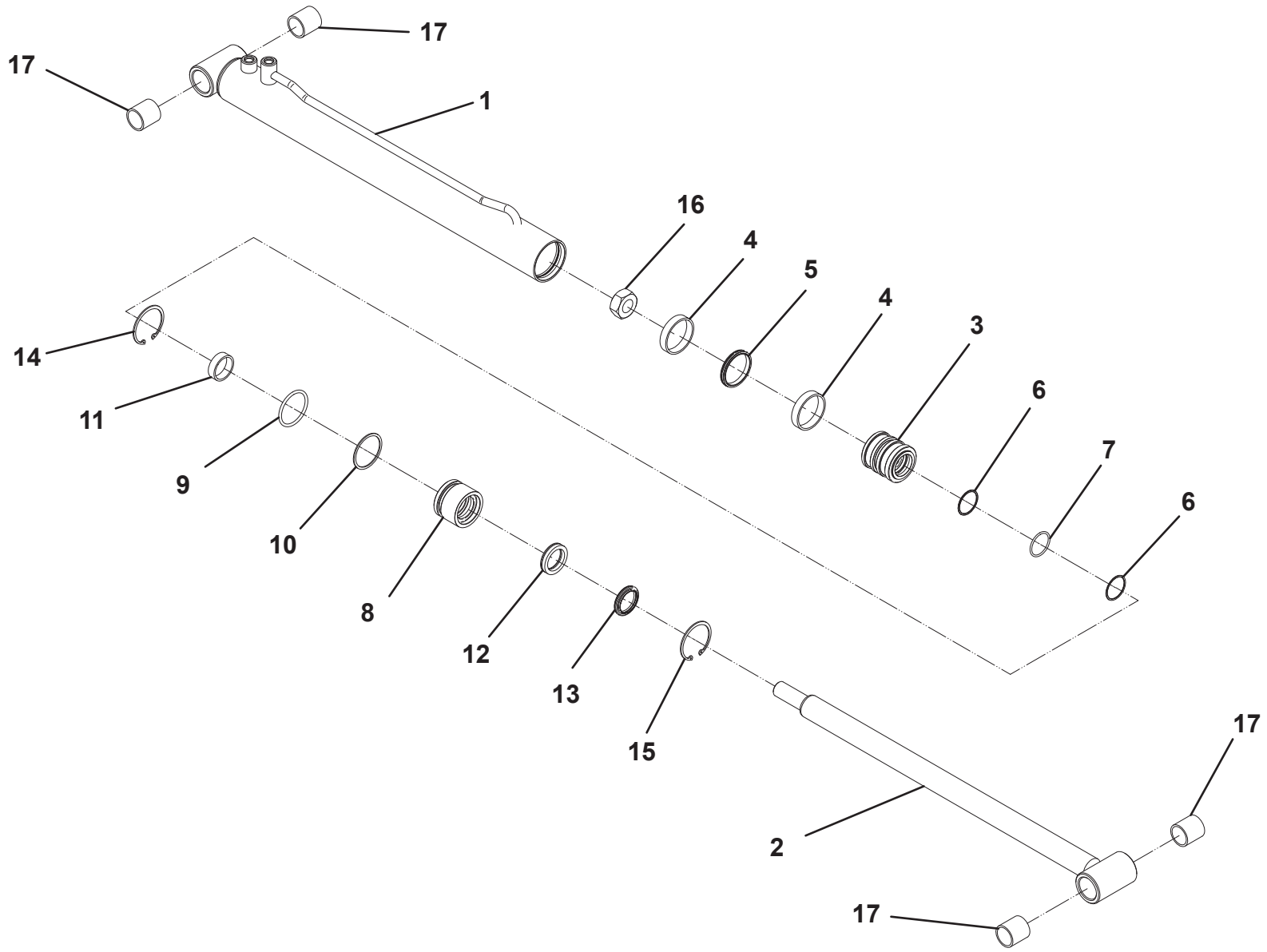

IRL CYLINDER ASSEMBLY - P/N 3320000134

ITEM	PART NO.	DESCRIPTION	QTY
1	3071000131	Barrel Weld	1
2	3763000139	Rod Weld	1
3	4698000007*	Piston	1
4	7754000003*#	Wear Ring	2
5	7796000063*#	Piston Locking “T” Seal	1
6	7755224609*#	Back-Up Ring	2
7	7755224000*#	“O” Ring	1
8	4553000008^	Head	1
9	7755334000^#	“O” Ring	1
10	7755334609^#	Back-Up Ring	1
11	7754000004^#	Wear Ring	1
12	7796000024^#	Rod Seal	1
13	7796000008^#	Rod Wiper Seal	1
14	7754000002#	Retaining Ring	1
15	7754000026#	Retaining Ring	1
16	7661000034	Locknut	1
17	7082000016	Bearing	2
18	7082000018	Bearing	2

* included in Piston Assembly, P/N 3698000001
^ included in Head Assembly, P/N 3553000011
# available only in Service Kit #7577250024

IRL CYLINDER ASSEMBLY - P/N 3320000134

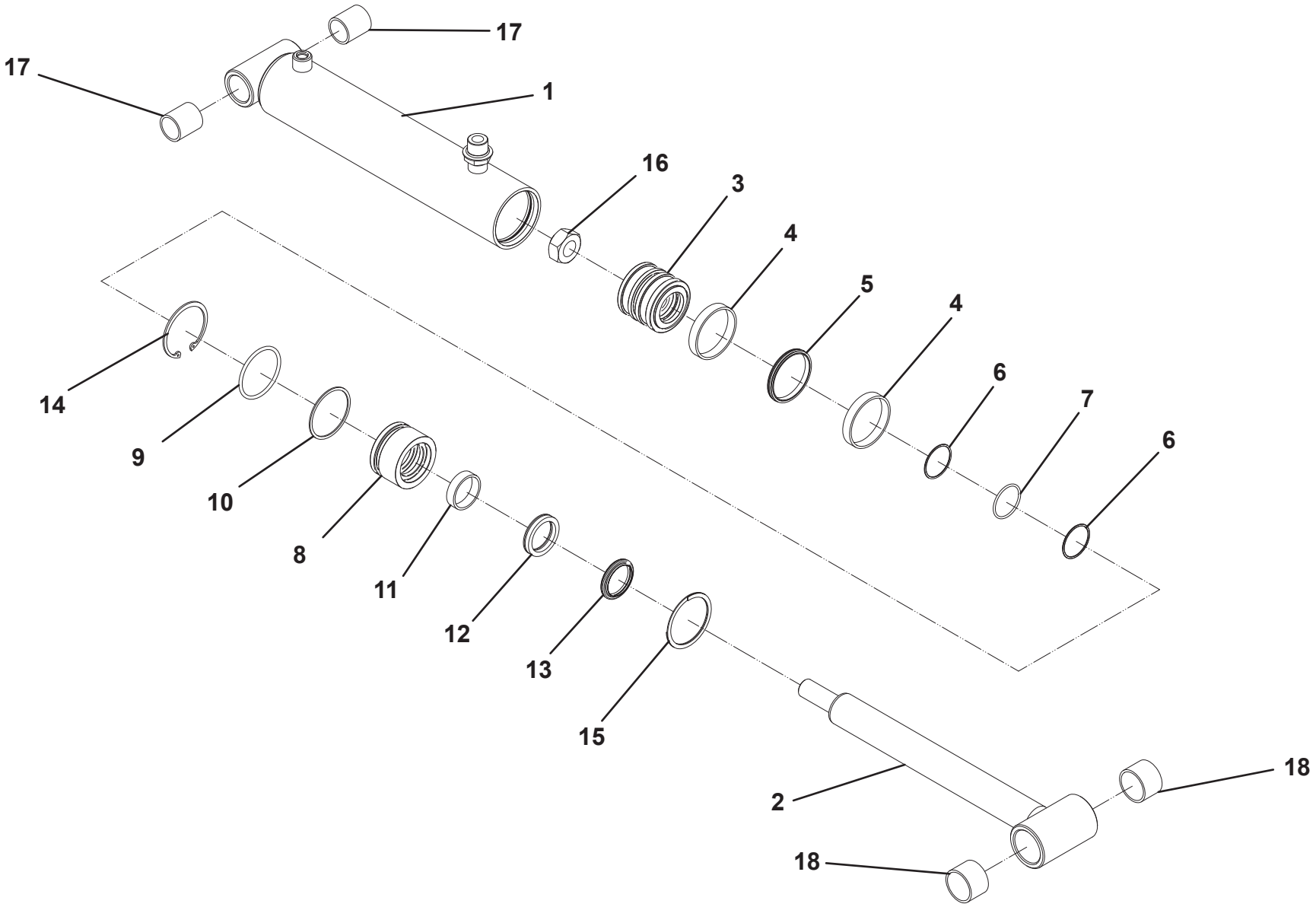

ZOD CYLINDER ASSEMBLY - P/N 3320000135

ITEM	PART NO.	DESCRIPTION	QTY
1	3071000139	Barrel Weld	1
2	3763000140	Rod Weld	1
3	4698000015*	Piston	1
4	7754000053*#	Wear Ring	2
5	7796000067*#	Piston Locking “T” Seal	1
6	7755224609*#	Back-Up Ring	2
7	7755224000*#	“O” Ring	1
8	4553000016^	Head	1
9	7755330000^#	“O” Ring	1
10	7755330609^#	Back-Up Ring	1
11	7754000054^#	Wear Ring	1
12	7796000045^#	Rod Seal	1
13	7796000046^#	Rod Wiper Seal	1
14	7754000051#	Retaining Ring	2
15	7661000034	Locknut	1
16	7082000016	Bearing	4

* included in Piston Assembly, P/N 3698000006
^ included in Head Assembly, P/N 3553000016
# available only in Service Kit #7577250206

ZOD CYLINDER ASSEMBLY - P/N 3320000135

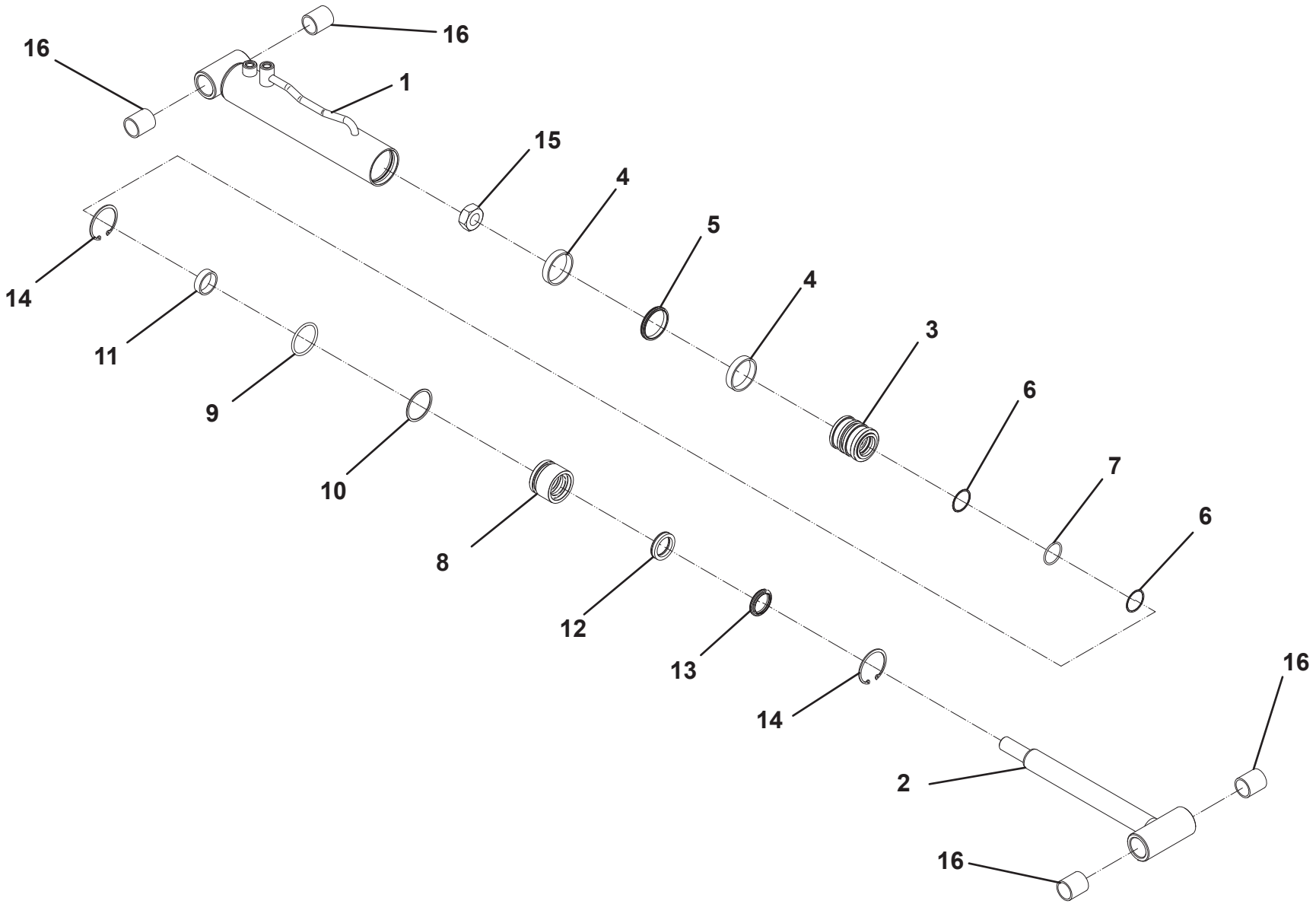

ZOD CYLINDER ASSEMBLY - P/N 7330000157

ITEM	PART NO.	DESCRIPTION	QTY
1	3071000109	Barrel Weld	1
2	3763000170	Rod Weld	1
3	4698000015*	Piston	1
4	7754000053*#	Wear Ring	2
5	7796000067*#	Piston Locking “T” Seal	1
6	7755224609*#	Back-Up Ring	2
7	7755224000*#	“O” Ring	1
8	4553000016^	Head	1
9	7755330000^#	“O” Ring	1
10	7755330609^#	Back-Up Ring	1
11	7754000054^#	Wear Ring	1
12	7796000045^#	Rod Seal	1
13	7796000046^#	Rod Wiper Seal	1
14	7754000051#	Retaining Ring	2
15	7661000034	Locknut	1
16	7082000016	Bearing	4

* included in Piston Assembly, P/N 3698000006
^ included in Head Assembly, P/N 3553000016
# available only in Service Kit #7577250206

ZOD CYLINDER ASSEMBLY - P/N 3320000157

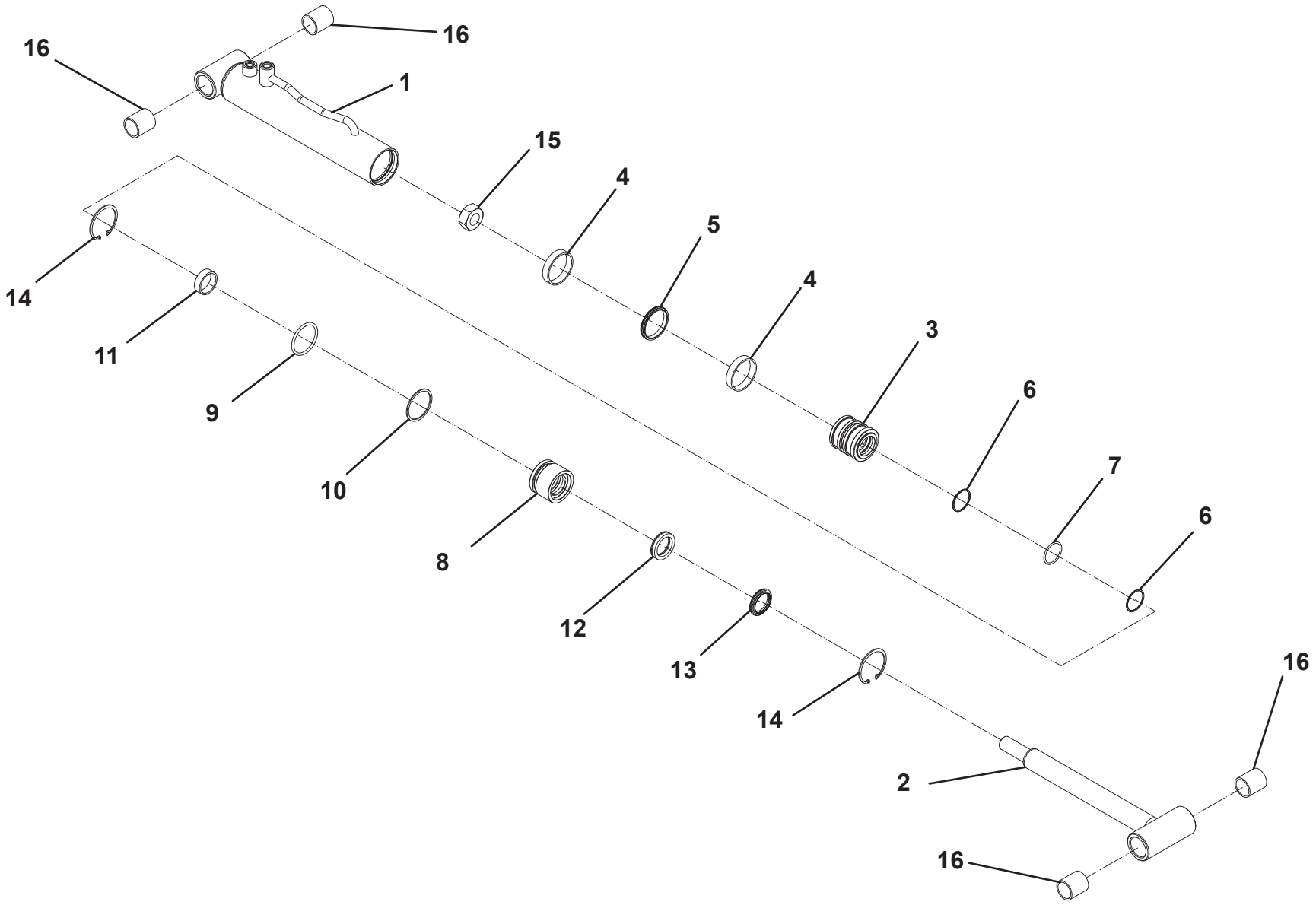

ROLL CYLINDER ASSEMBLY - P/N 3320000236

ITEM	PART NO.	DESCRIPTION	QTY
1	3071000218	Barrel Weld	1
2	4763000204	Rod	1
3	4698000007*	Piston	1
4	7754000003*#	Wear Ring	2
5	7796000063*#	Piston Locking “T” Seal	1
6	7755224609*#	Back-Up Ring	2
7	7755224000*#	“O” Ring	1
8	4553000008^	Head	1
9	7755334000^#	“O” Ring	1
10	7755334609^#	Back-Up Ring	1
11	7754000004^#	Wear Ring	1
12	7796000024^#	Rod Seal	1
13	7796000008^#	Rod Wiper Seal	1
14	7754000002#	Retaining Ring	1
15	7754000026#	Retaining Ring	1
16	7661000034	Locknut	1
17	1001148308	Nut, 1.00”-14NF	1

* included in Piston Assembly, P/N 3698000001
^ included in Head Assembly, P/N 3553000011
# available only in Service Kit #7577250024

ROLL CYLINDER ASSEMBLY - P/N 3320000236

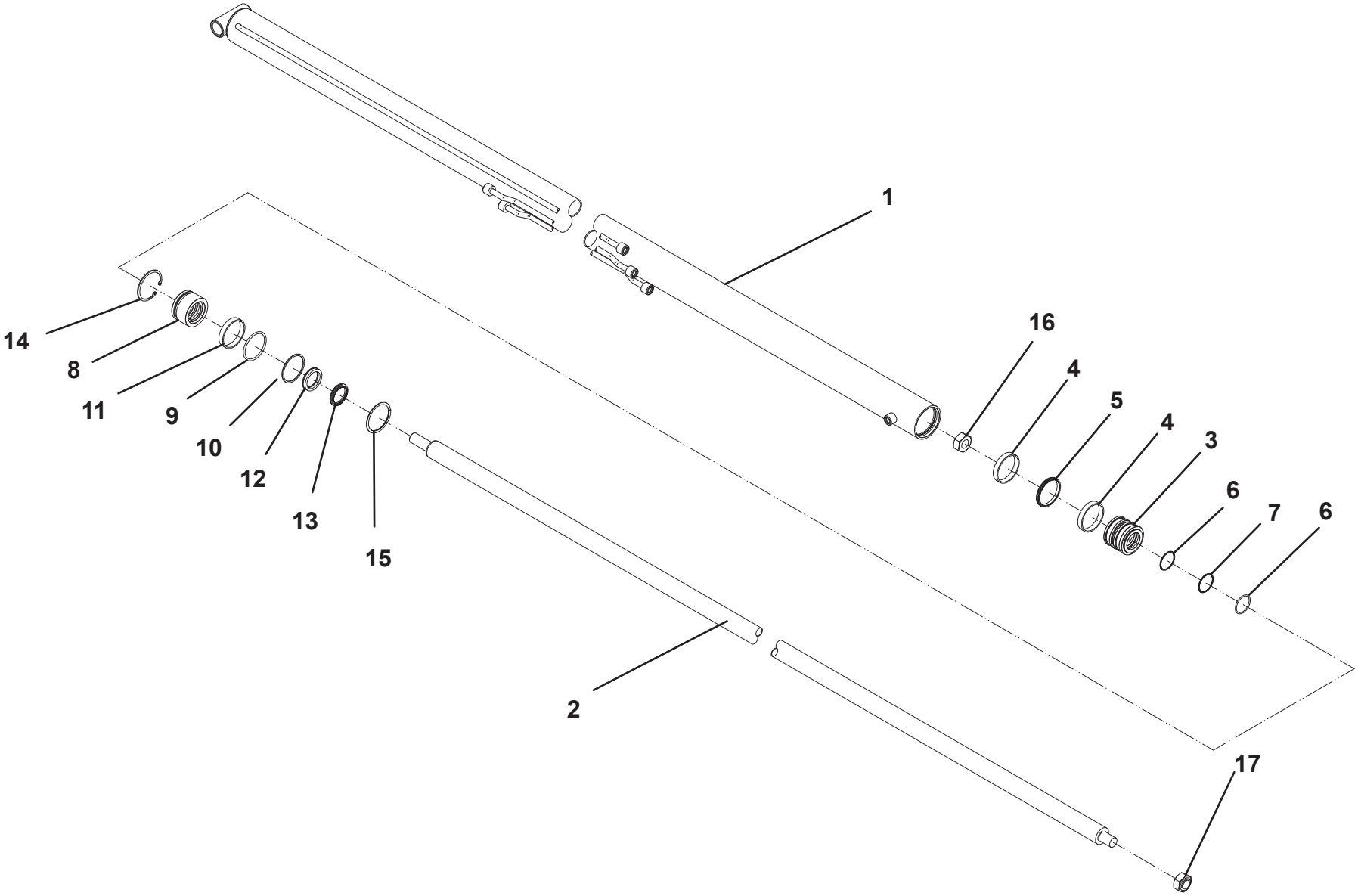

LIGHTBARS

ITEM	PART NO.	DESCRIPTION	QTY
1	1001136989	Lightbar, Prizm, Amber LED	1
	1001136993	Lightbar, Prizm, Red LED	
	7590000403	Lightbar, Whelen, Amber LED	
2	4178000402	Bracket (standard mount)	2
	4178000437	Bracket (high mount)	
3	7115180850	Capscrew, 0.50”-13NC x 1.00”	2
4	7950180252	Flatwasher, 0.50” ID	2
5	7950180000	Lockwasher, 0.50” ID	2

LIGHTBARS

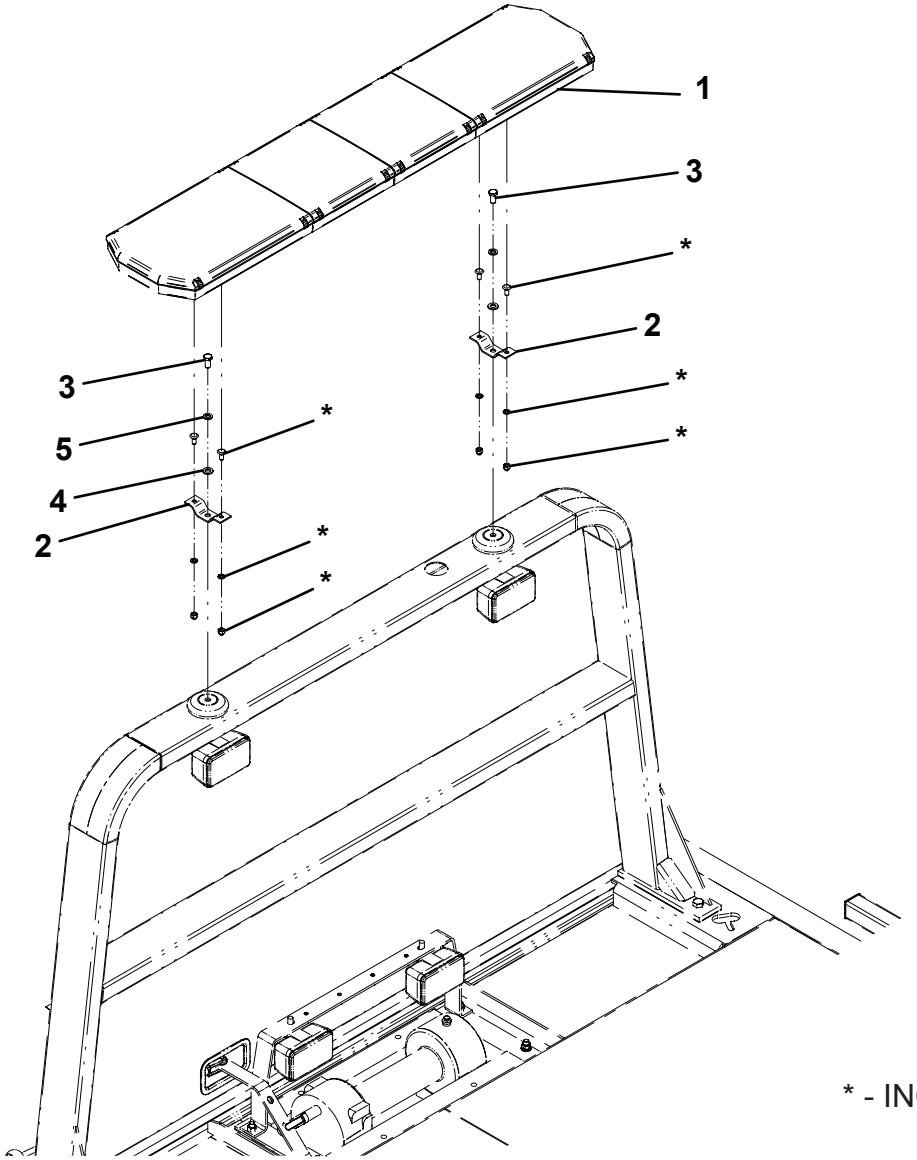

* - INCLUDED WITH LIGHTBAR

SWITCH PANELS

ITEM	PART NO.	DESCRIPTION	QTY
1	4178000403	Bracket -1 Function Switch Panel	1
2	4178000427	Bracket -2 Function Switch Panel	1
3	7870000083	Switch	1
4	7870000113	Switch Panel - 3 Function, Mini In-Dash	1
5	7870000100	Switch Panel - 3 Function, In-Dash	1
6	7870000106	Switch Panel - 5 Function, In-Dash	1
7	7870000134	Switch Panel - 3 Function, Under Dash	1
8	7870000137	Switch Panel - 5 Function, Under Dash	1
9	2870000022	Switch Panel - 3 Function, In-Dash	1
		for Ford F650/750	
10	2870000021	Switch Panel - 5 Function, In-Dash	1
		for Ford F650/750	
11	7870000053	Switch Panel - 3 Function, Under Dash	1
12	7870000063	Switch Panel - 5 Function, Under Dash	1
13	7870000076	Switch Panel - 3 Function, In-Dash	1
		for IHC 4300/4400	

SWITCH PANELS

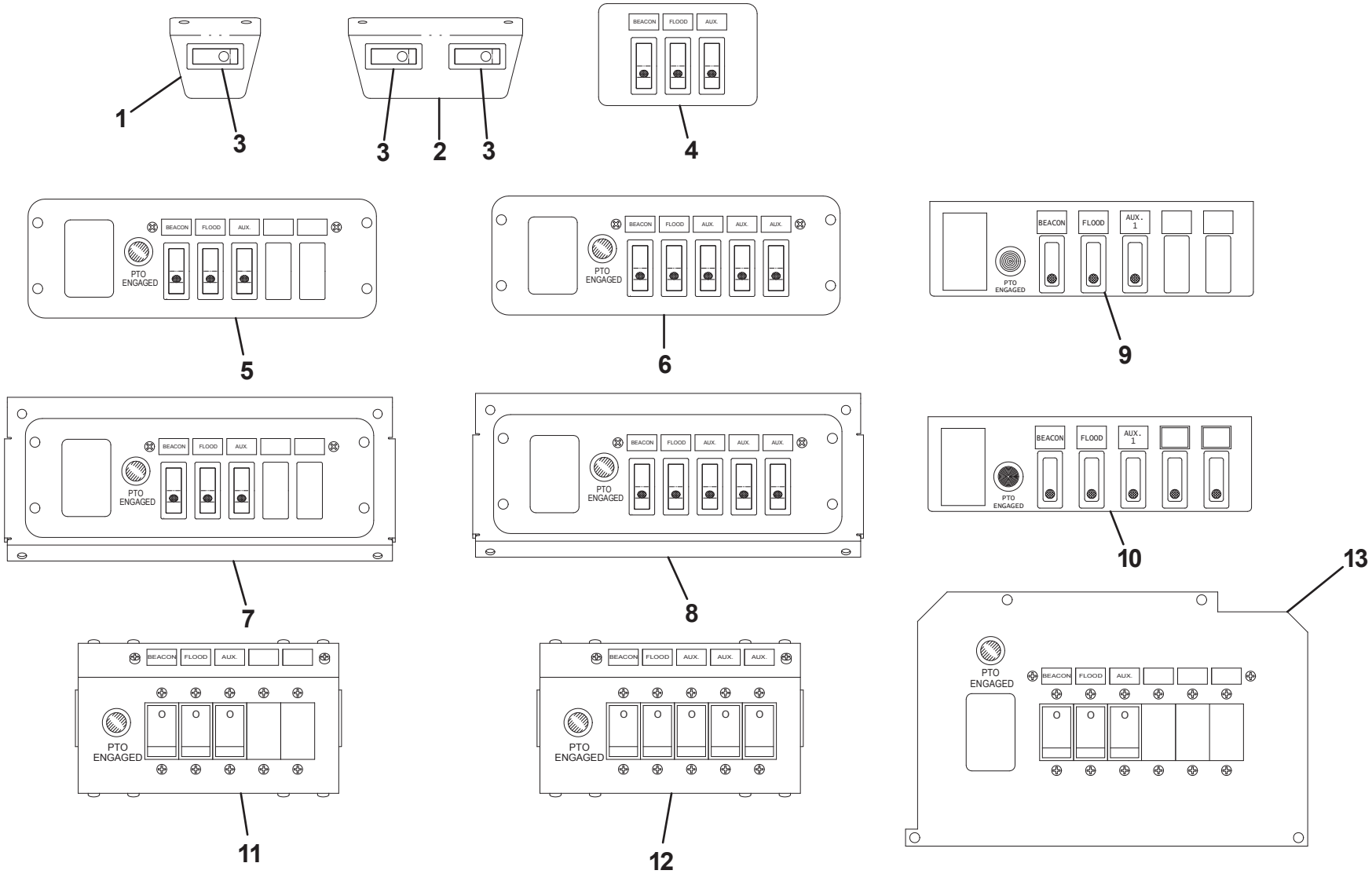

WORK LIGHTS

ITEM	PART NO.	DESCRIPTION	QTY
1	7590000223	Work Light	4
2	4178000402	Bracket	2
3	7790151253	Screw, 0.31”-18NC x 0.75”	4
4	7493000003	Grommet	2
5	7552000222	Harness - Headboard Work Lights	1
	7552000360	Harness - Headboard Work Lights (Bucket Rest Headboard Only)	1
6	4178000423	Bracket	1
7	7280000011	Clip - Winch Work Lights	6
8	7552000166	Harness - Winch Work Lights	1
9	7590000185	Work Light	2

WORK LIGHTS

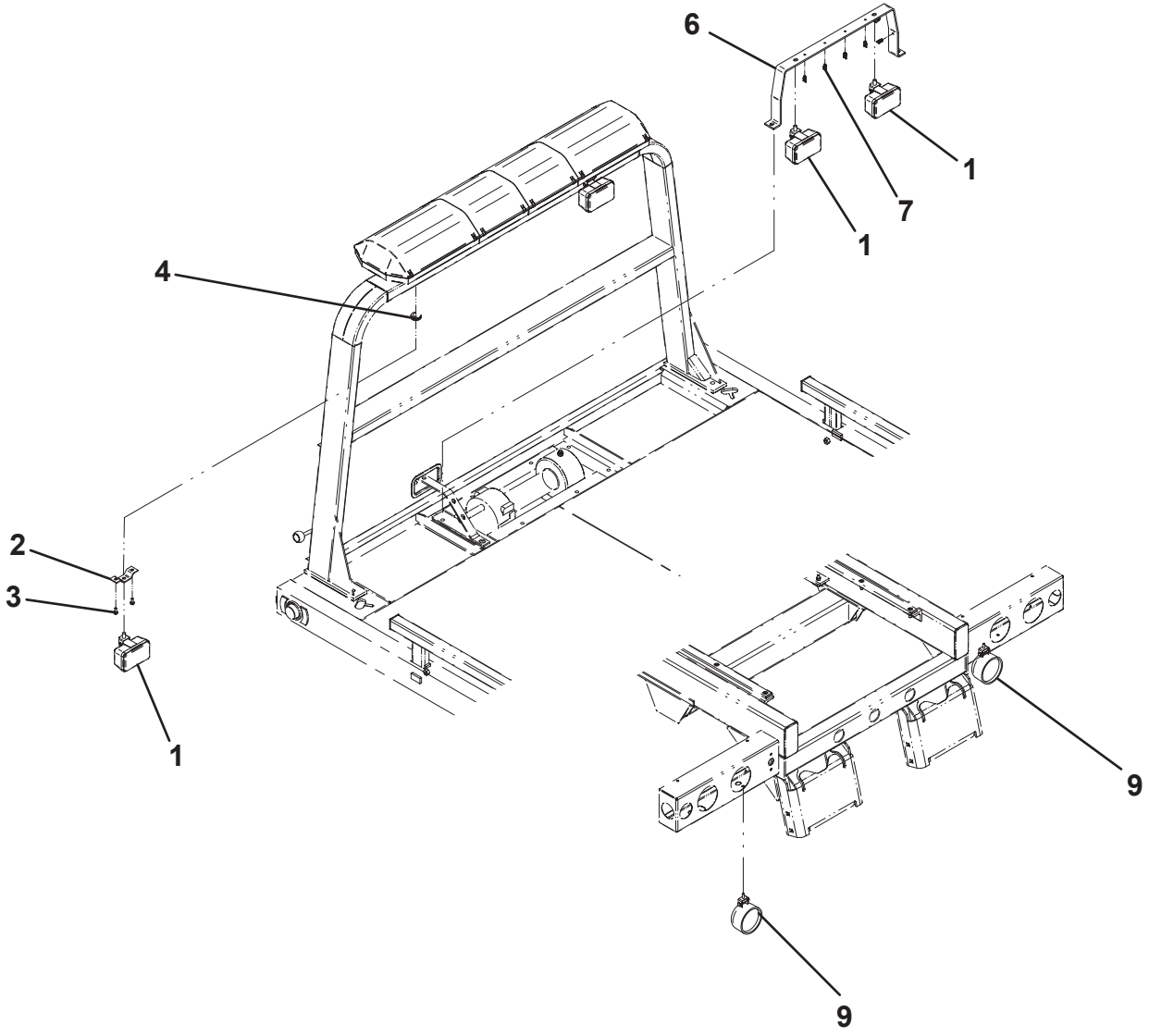

BOLT-ON D-RINGS

ITEM	PART NO.	DESCRIPTION	QTY
1	3556000019	D-Ring	1
2	7115182050	Capscrew, 0.50”-13NC x 2.50”	2
3	7950180161	Flatwasher, 0.50” ID (aluminum decks only)	2
4	7660182601	Locknut, 0.50”-13NC	2

BOLT-ON D-RINGS

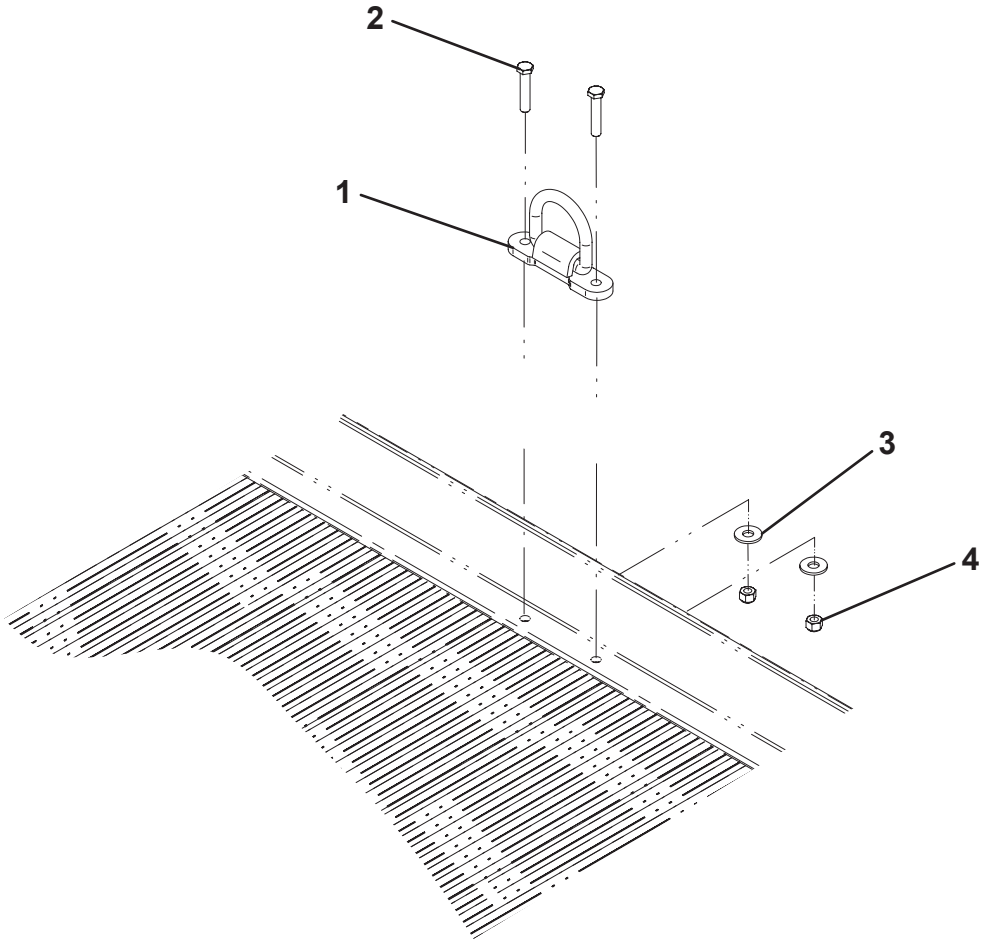

ALUMINUM DECK

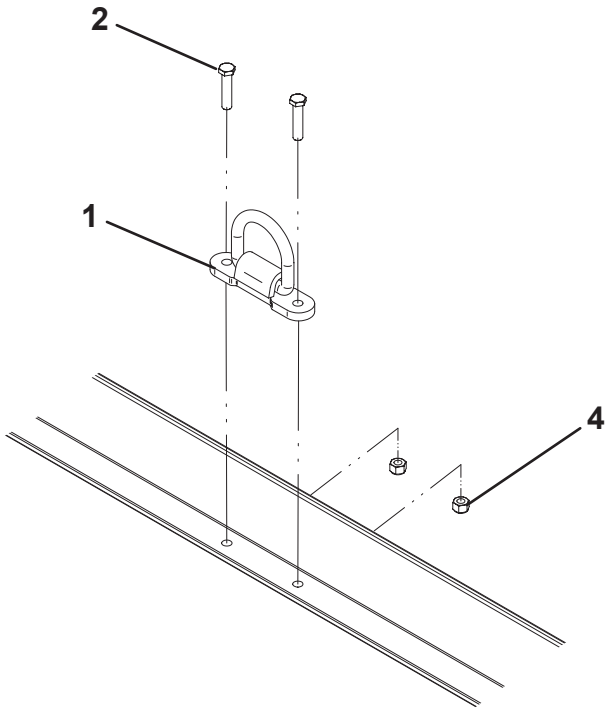

STEEL DECK

APPROACH TIP ROLLER INSTALLATION

ITEM	PART NO.	DESCRIPTION	QTY
1	3550001912	Bracket	1
2	7550000074	Bearing	2
3	7550000073	Roller	1
4	4691000568	Pin	1
5	7754000022	Retaining Ring	2
6	7114181218	Capscrew, 0.50”-13NC x 1.50”	2
7	7660182601	Locknut, 0.50”-13NC	2

APPROACH TIP ROLLER INSTALLATION

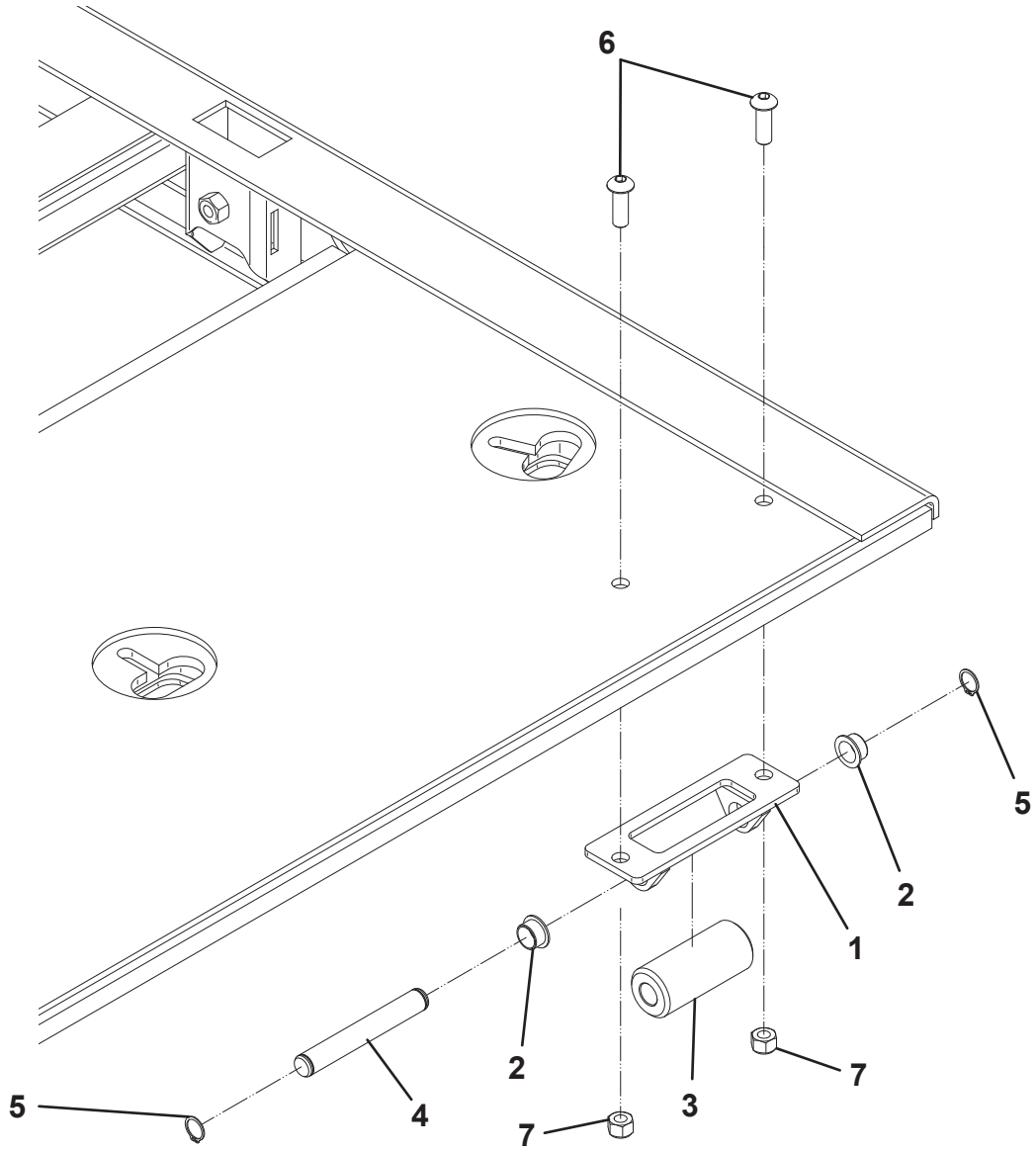

1, 2, 3, 4 OR 5 REMOTE CONTROL OPERATIONS

ITEM	PART NO.	DESCRIPTION	QTY
1	7005000003	Linear Actuator 12V	1*
2	4706005361	Plate	2
3	7115150864	Carriage Bolt, 0.31”-18NC x 1.00”	4
4	7950150161	Flatwasher, 0.31” ID	4
5	7660152601	Locknut, 0.31”-18NC	4
6	4178000664	Bracket	1*
7	4178000665	Bracket	1*
8	7115150864	Carriage Bolt, 0.31”-18NC x 1.00”	2*
9	7660152601	Locknut, 0.31”-18NC	2*
10	4691000141	Pin (3, 4 or 5 section control valve)	1
	4691000373	Pin (6 section control valve)	
	4691000374	Pin (7 section control valve)	
11	4211000001	Bushing	4*
12	7950220141	Flatwasher, 0.75” ID	4
13	7754000009	Retaining Ring	2
14	7295000106	Controller (1 remote operation)	1
	7295000108	Controller (2 remote operations)	
	7295000109	Controller (3 remote operations)	
	7295000111	Controller (4 or 5 remote operations)	
15	7114100810	Screw, #10-24NC x 1.00”	2
		(1 remote operation)	
	7114100810	Screw, #10-24NC x 1.00”	6
		(2, 3, 4, or 5 remote operations)	
16	7950140151	Flatwasher, 0.19” ID	2
		(1 remote operation)	
	7950140151	Flatwasher, 0.19” ID	8
		(2, 3, 4, or 5 remote operations)	
17	7660102604	Locknut, #10-18NC	2
		(1 remote operation)	
	7660102604	Locknut, #10-18NC	6
		(2, 3, 4, or 5 remoter operations)	
18	4706005595	Plate (2, 3, 4, or 5 remote operations)	1

ITEM	PART NO.	DESCRIPTION	QTY
19	7330000696	Decal - Controller Functions	1
		(3, 4, or 5 remote operations)	
20	9295310032#	Transmitter (1 remote operation)	1
	9295310033#	Transmitter (2 remote operations)	
	9295310034#	Transmitter (3 remote operations)	
	9295310036#	Transmitter (4 or 5 remote operations)	
21	9295310030#	Belt Clip	1
22	9295310042#	Rubber Boot (1 or 2 remote operations)	1
	9295310029#	Rubber Boot (3, 4, or 5 remote operations)	
23	9295310037#	Receiver (1 remote operation)	1
	9295310038#	Receiver (2 remote operations)	
	9295310039#	Receiver (3 remote operations)	
	9295310050#	Receiver (4 or 5 remote operations)	
24	7552000391	Harness (1 remote operation)	1
	7552000392	Harness (2 remote operations)	
	7552000393	Harness (3 remote operations)	
	7552000426	Harness (4 or 5 remote operations)	

* quantities are for 1 remote operation, adjust quantities for 2, 3, 4, or 5 remote operations
# included with Controller, item #14

1, 2, 3, 4 OR 5 REMOTE CONTROL OPERATIONS

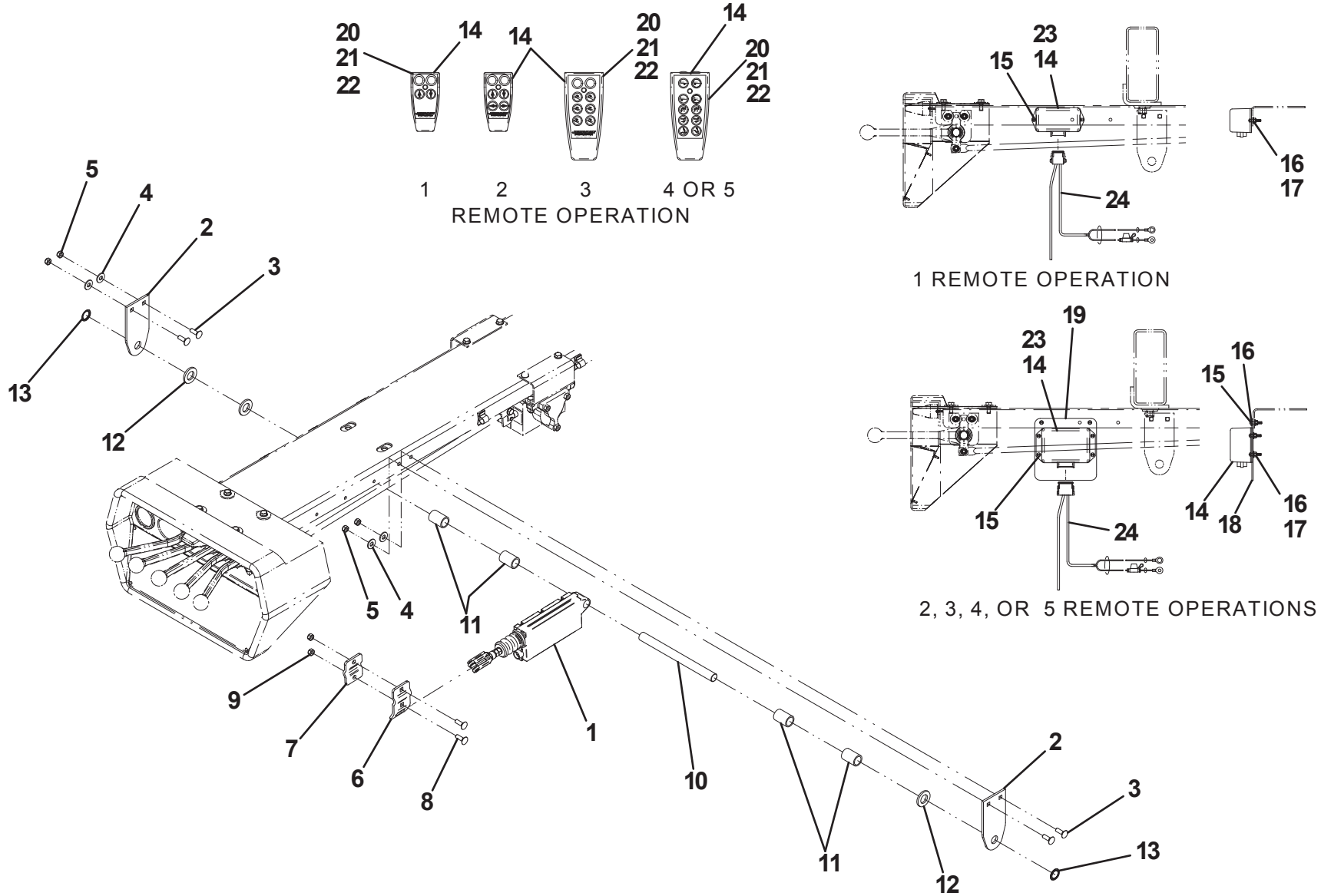

6 OR 7 REMOTE CONTROL OPERATIONS

ITEM	PART NO.	DESCRIPTION	QTY
1	7005000003	Linear Actuator 12V	1*
2	4706005361	Plate	2
3	7115150864	Carriage Bolt, 0.31”-18NC x 1.00”	4
4	7950150161	Flatwasher, 0.31” ID	4
5	7660152601	Locknut, 0.31”-18NC	4
6	4178000664	Bracket	1*
7	4178000665	Bracket	1*
8	7115150864	Carriage Bolt, 0.31”-18NC x 1.00”	2*
9	7660152601	Locknut, 0.31”-18NC	2*
10	4691000373	Pin (6 section control valve)	
	4691000374	Pin (7 section control valve)	
11	4211000001	Bushing	4*
12	7950220141	Flatwasher, 0.75” ID	4
13	7754000009	Retaining Ring	2
14	7295000102	Controller (6 remote operations)	1
	7295000103	Controller (7 remote operations)	
15	4706005396	Plate	1
16	4706003650	Plate	1
17	7115140650	Capscrew, 0.25”-20NC x 0.75”	5
18	7950140141	Flatwasher, 0.25” ID	5
19	7660142601	Locknut, 0.25”-20NC	5
20	7114080618	Capscrew, #8-32NC x 0.75”	4
21	7660082604	Locknut, #8-32NC	4
22	7104100613	Screw, #10-32NF x 0.34”	4
23	7661000007	Wellnut, #10-32NF	4
24	9295310026#	Transmitter (6 or 7 remote operations)	1
25	7330000612	Decal - Controller Functions	1

* quantities are for 1 remote operation, adjust quantities for 6 or 7 remote operations
# included with Controller, item #14 (6 or 7 remote operations)

6 OR 7 REMOTE CONTROL OPERATIONS

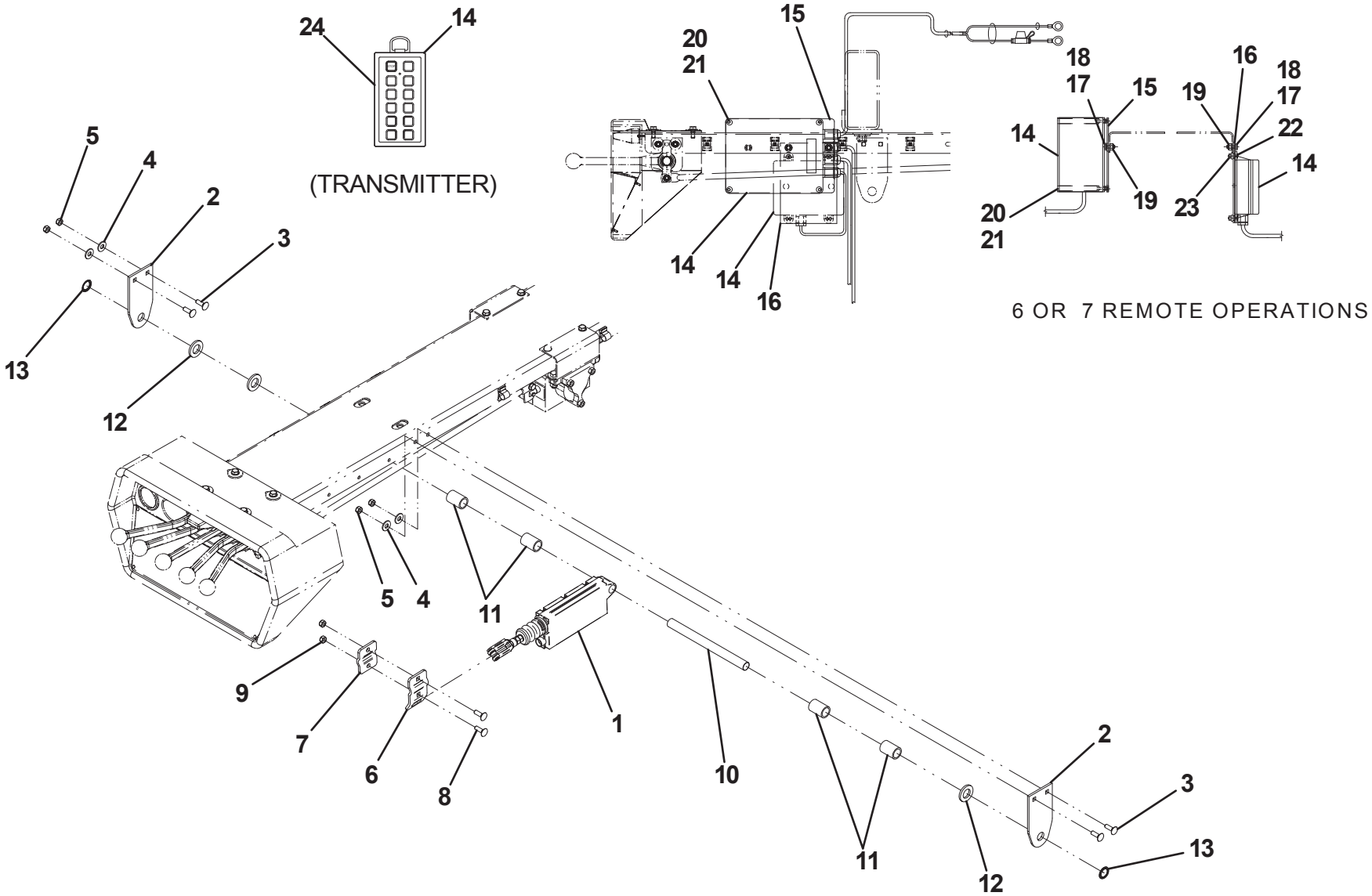

REMOTE THROTTLE CONTROL

ITEM	PART NO.	DESCRIPTION	QTY
1	7346000208	Pressure Switch	1
2	7552000241	Harness	1
3	7443000427*	Check Valve	1
4	7445060643*	Adapter	1
5	7443000432	Tee	1
6	7443000469	Fitting	1
7	7445040643	Adapter	1

* also available in Check Valve w/ Adapter, P/N 7443000428.

REMOTE THROTTLE CONTROL

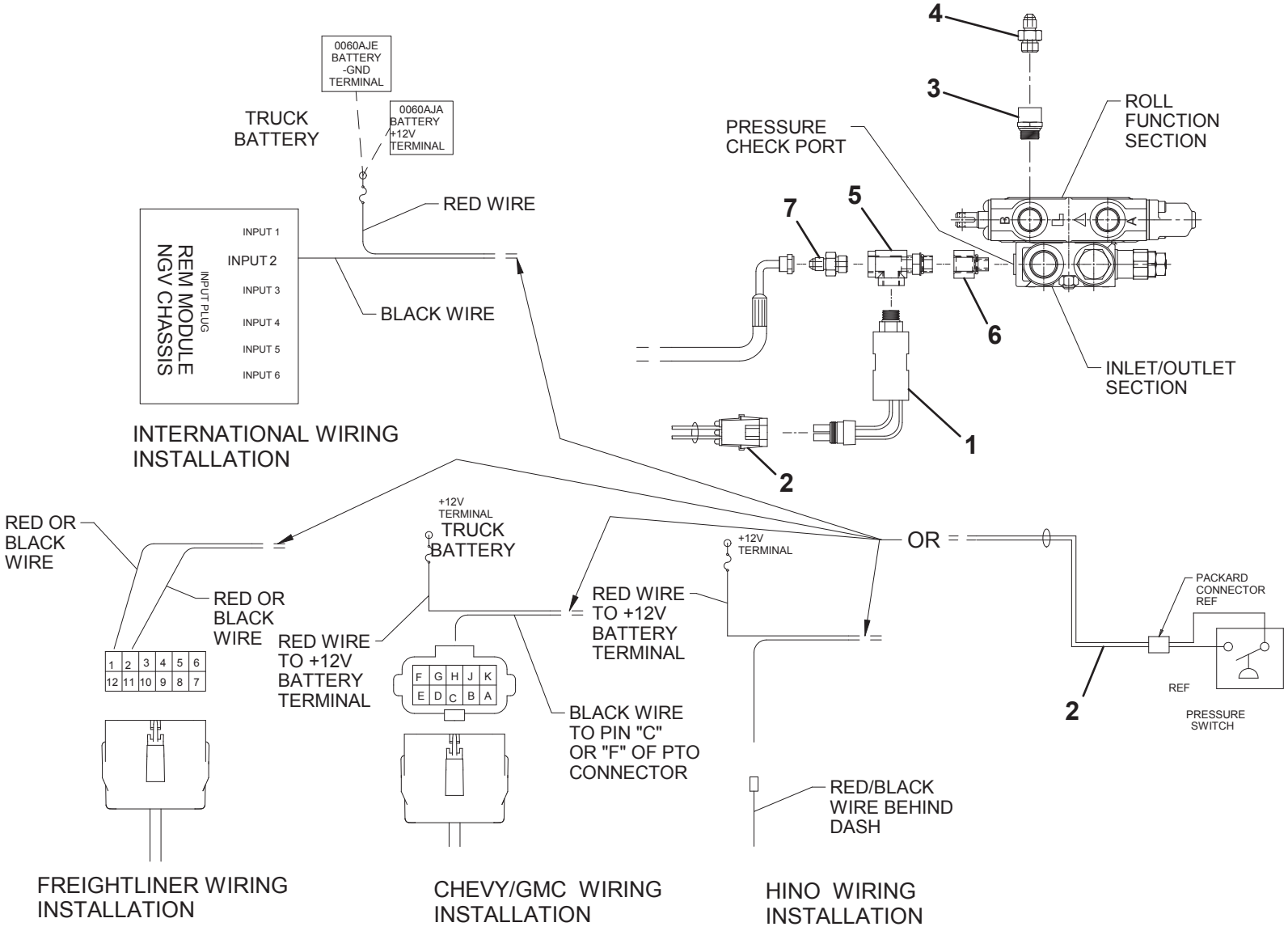

GLAD HANDS AND 7-WAY CONNECTOR

ITEM	PART NO.	DESCRIPTION	QTY
1	4178000666*	Bracket	1
2	7115181464*	Carriage Bolt, 0.50”-13NC x 1.75”	2
3	7660182601*	Locknut, 0.50”-13NC	2
4	7346000055+	Electrical Receptacle 7-way Connect	1
5	7346000078+	Electrical Boot	1
6	7111150813+	Capscrew, 0.31”-18NC x 1.00”	2
7	7660152601+	Locknut, 0.31”-18NC	2
8	7346000132	Electrical Adapter 7 to 4 way	1
9	7346000157	Electrical Adapter 7 to 6 way	1
10	7312000015^	Gladhand	1
11	7312000016^	Gladhand	1
12	7446502518^	Bulkhead Fitting	2
13	7446382506^	Connector	2
14	7577000145^	Seal Kit Gladhand	1
15	7565000014^	Airline Tubing	50ft
16	7312000013^	Union	2

* also available in Bracket Install Gladhands and 7 Way, P/N 2178000037
+ also available in Electrical Install 7 Way Connector, P/N 2346000008
^ also available in Gladhand Install, P/N 2002000016

GLAD HANDS AND 7-WAY CONNECTOR

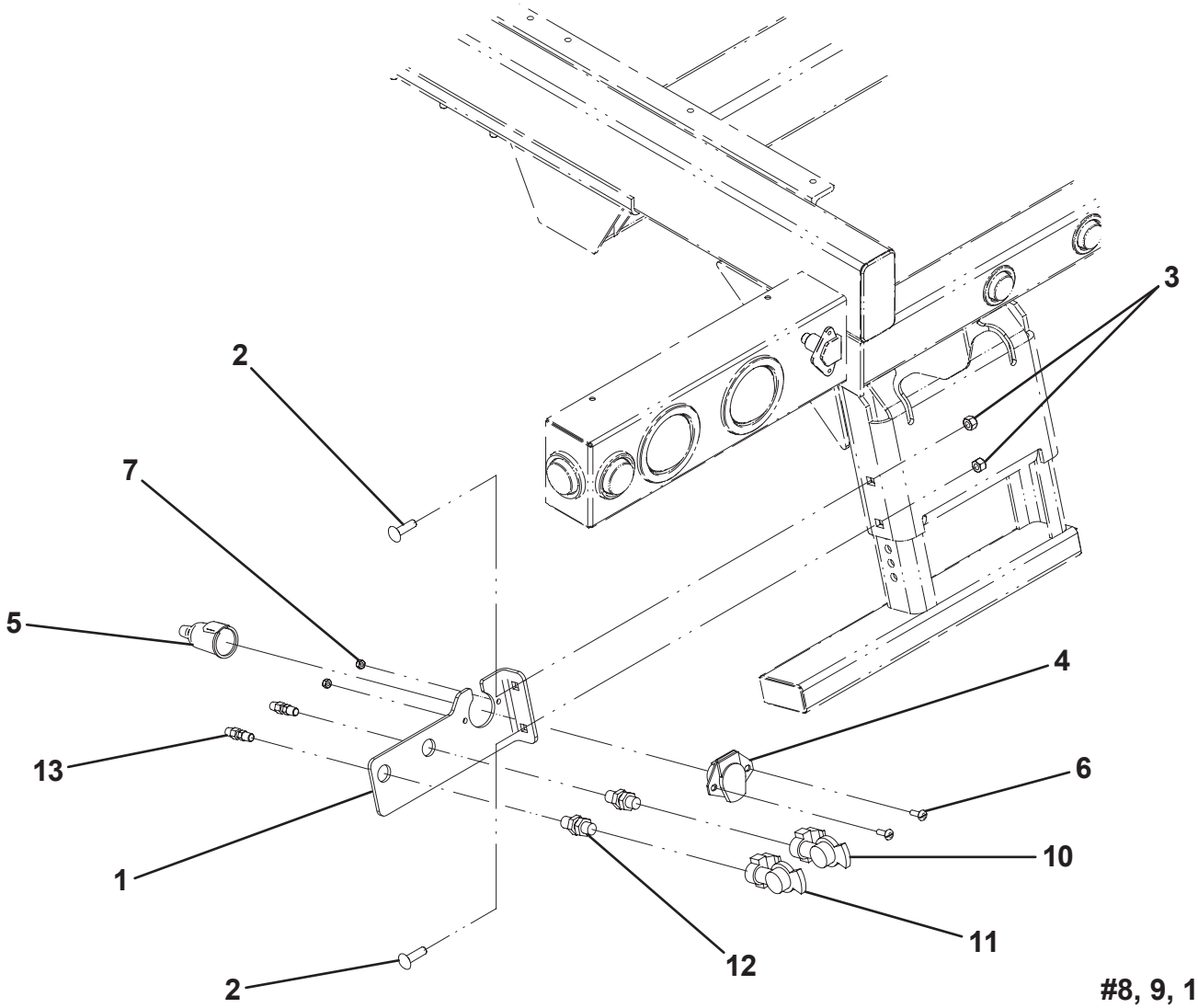

#8, 9, 14, 15 & 16 Not Shown

AIR SUPPLY DISCONNECT

ITEM	PART NO.	DESCRIPTION	QTY
1	7312000017	Coupling	1
2	7445080853	Elbow	1
3	7446502518	Bulkhead Fitting	1
4	7443000111	Elbow	1
5	7446382506	Connector	1
6	7565000014	Airline Tubing	32 ft
7	7935000120	Air Valve	1
8	7443000154	Bushing	1
9	7443000156	Nipple	1
10	7894000031	Cable Tie	6
11	7443000366	Fitting	1

AIR SUPPLY DISCONNECT

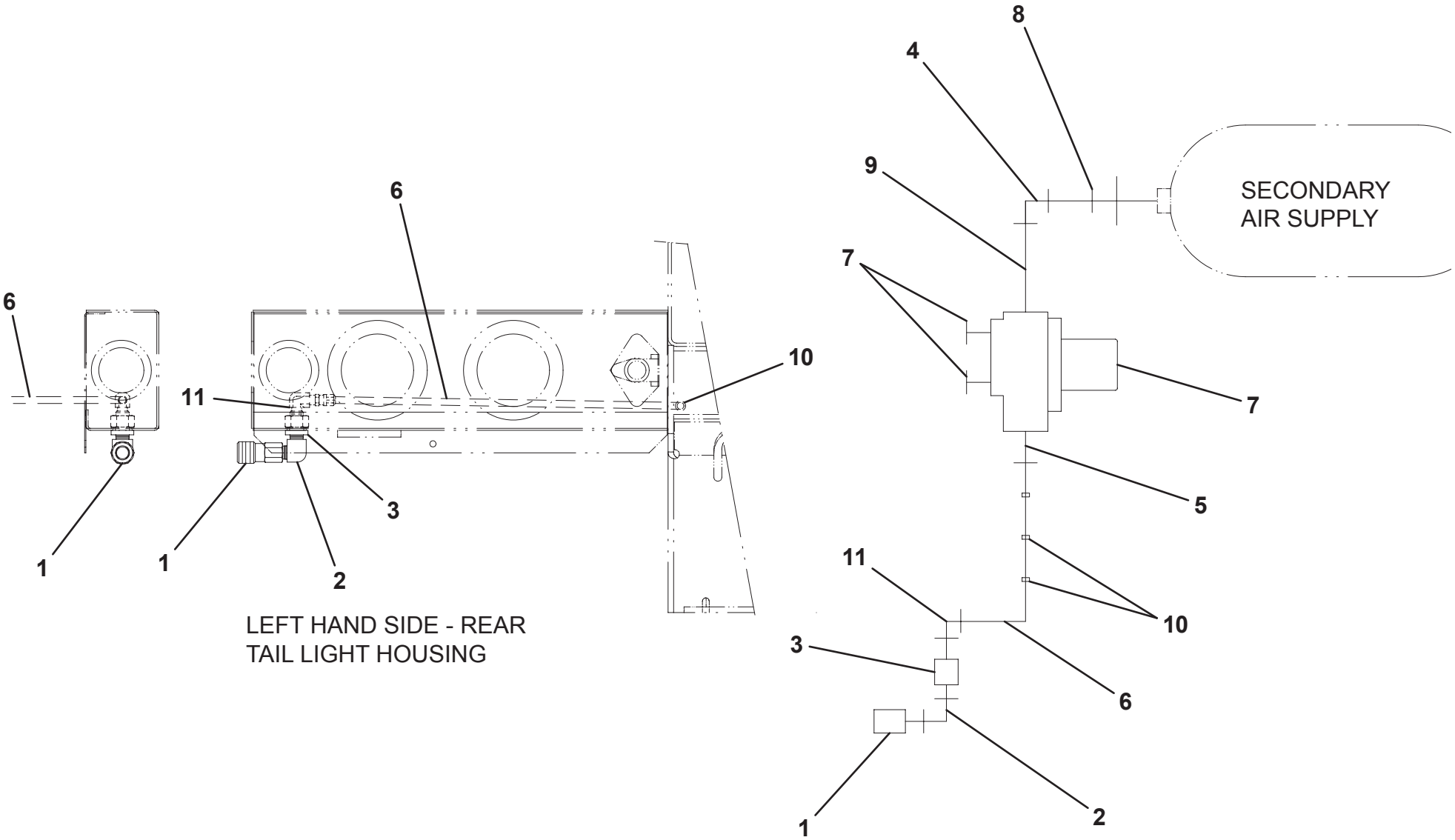

JUMP START KIT

ITEM	PART NO.	DESCRIPTION	QTY
1	7002000386	Jump Start Plug (IHC & Other)	1
	7002000385	Jump Start Plug (Ford & GMC)	
2	4178000372	Bracket (Ford & Other)	1
	4178000202	Bracket (GMC)	
3	4178000203	Bracket (GMC)	1
	4706003210	Plate (Other)	
4	7110140605	Capscrew, 0.25”-20NC x 0.75”	1
		(Ford, GMC & Other)	
5	7950140161	Flatwasher, 0.25” ID (Ford & Other)	1
	7950140161	Flatwasher, 0.25” ID (IHC)	2
	7950140161	Flatwasher, 0.25” ID (GMC)	3
6	7660142600	Locknut, 0.25”-20NC (Ford, GMC & Other)	1
	7660142600	Locknut, 0.25”-20NC (IHC)	2
7	7115151064	Carriage Bolt, 0.31”-18NC x 1.25” (Other)	2
8	7950150161	Flatwasher, 0.31” ID (Other)	2
9	7660152601	Locknut, 0.31”-18NC (Other)	2
10	7115141450	Capscrew 0.25”-20NC x 1.75” (IHC)	1
11	7115141650	Capscrew, 0.25”-20NC x 2.00” (IHC)	1
12	7660140000	Hex Nut, 0.25”-20NC (IHC)	1
	7660140000	Hex Nut, 0.25”-20NC (GMC)	2
13	7111140850	Capscrew, 0.25”-20NC x 1.00” (GMC)	2
14	7115181050	Capscrew, 0.50”-13NC x 1.25” (GMC)	1
15	7950180153	Flatwasher, 0.50” ID (GMC)	1
16	7660180000	Hex Nut, 0.50”-13NC (GMC)	1

JUMP START KIT

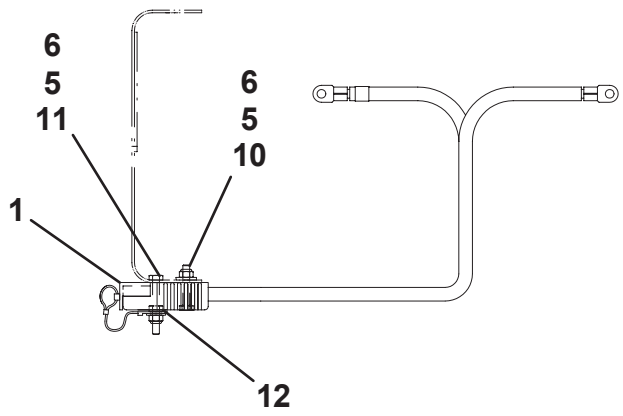

IHC FRONT BUMPER

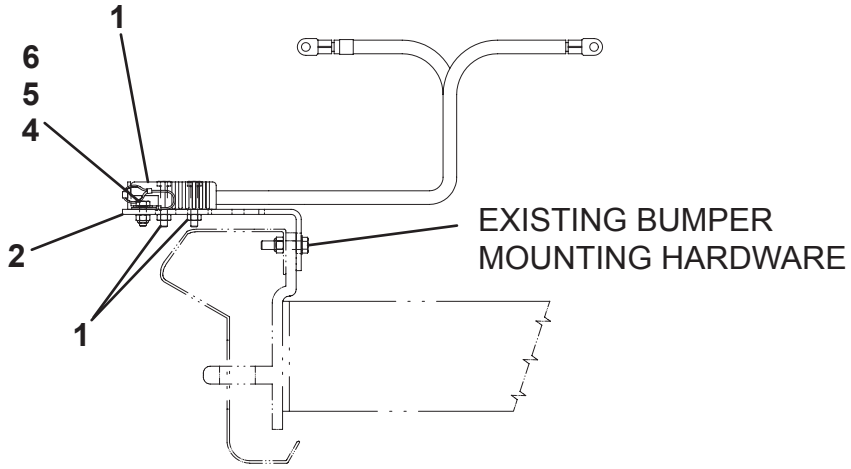

FORD FRONT BUMPER

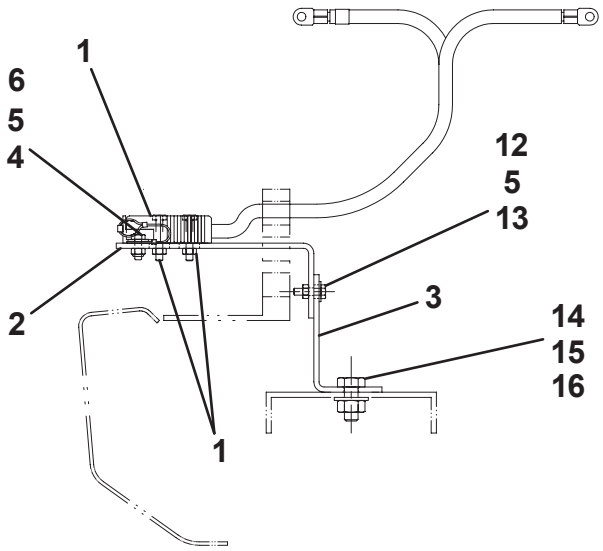

CHEVY FRONT BUMPER

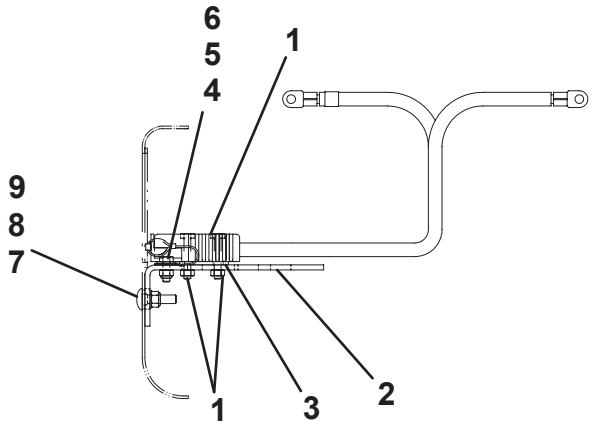

ALL OTHER FRONT BUMPERS

FOLDING DECK LADDER

ITEM	PART NO.	DESCRIPTION	QTY
1	3178000555	Bracket Weld	1
2	3002000009	Ladder Top Weld	1
3	3002000008	Ladder Bottom Weld	1
4	7114181418	Capscrew, 0.50”-13NC x 1.75”	4
5	7950180141	Flatwasher, 0.50” ID	12
6	7660182601	Locknut, 0.50”-13NC	4
7	7115180606	Shoulder Bolt, 0.50”-13NC x 0.75”	2
8	7950160161	Flatwasher, 0.38” ID	2
9	7660162601	Locknut, 0.38”-16NC	2

FOLDING DECK LADDER

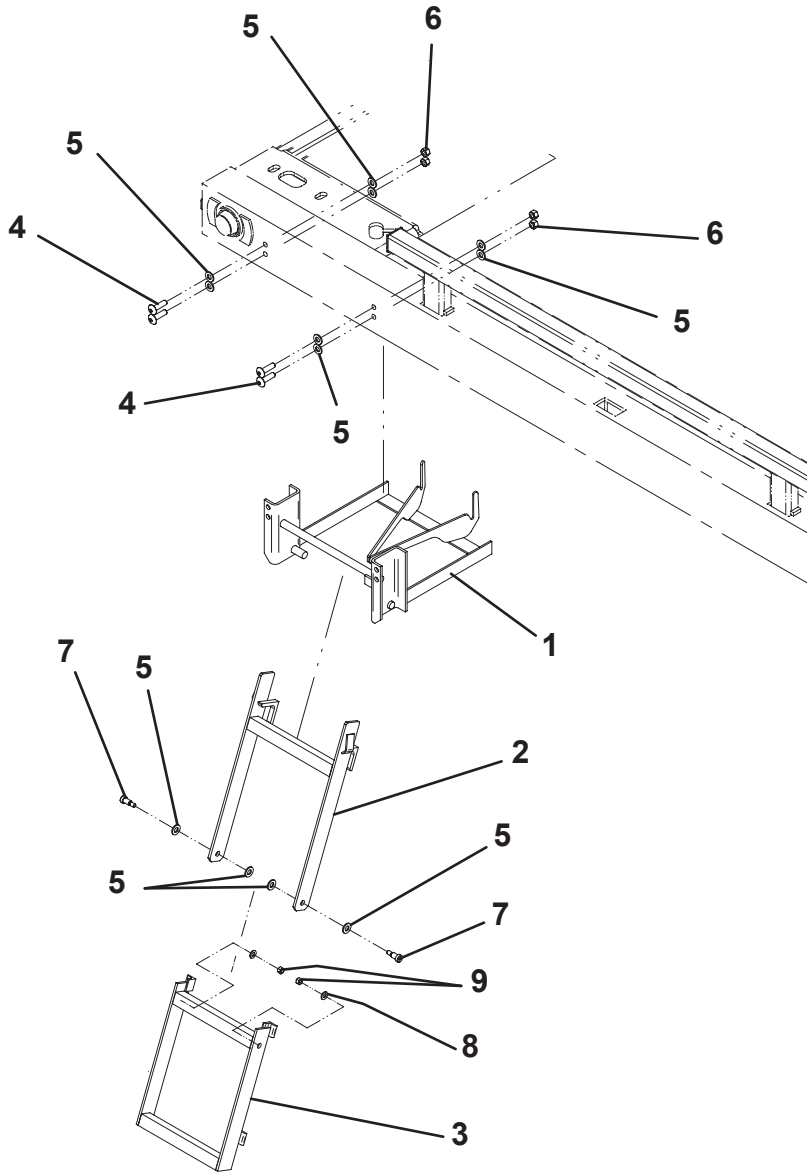

CHAINS AND STRAPS

ITEM	PART NO.	DESCRIPTION	QTY
1	7262000022*	Winch V-Chain	1
2	7262000056*	Front Tie-Down Chain	2
3	7894000019*	Rear Tie-Down Strap	2
4	7894000020*	Rear Tie-Down Ratchet	2
5	7262000040	Wheel Lift Chain	2
6	7894000034+	Wheel Lift Tire Strap	2
7	7262000010	Towbar Chain	2
8	7894000058^	Tire Strap (hydraulic Grid)	1
9	7894000059^	Choker (hydraulic Grid)	1
10	7894000028^	Ratchet (hydraulic Grid)	1
11	7561000024^	Forged Hook (hydraulic Grid)	1
12	7115181664	Carriage Bolt, 0.50”-13NC x 2.00”	2
13	7660180001	Nut, 0.50”-13NC	2
14	7660182601	Locknut, 0.50”-13NC	2
15	5525000752	Magnetic Tow Lights	1
16	7894000073	8 Point Tie-Down Kit	1

* also available in Deck Chain / Tie-Down Kit, P/N 7577000208
^ also available in Hydraulic Grid Wheel Lift Tie-Down Kit, P/N 7577000376
+ also available in Wheel Lift Tie-Down Strap and Ratchet Kit, P/N 7577000242

CHAINS AND STRAPS

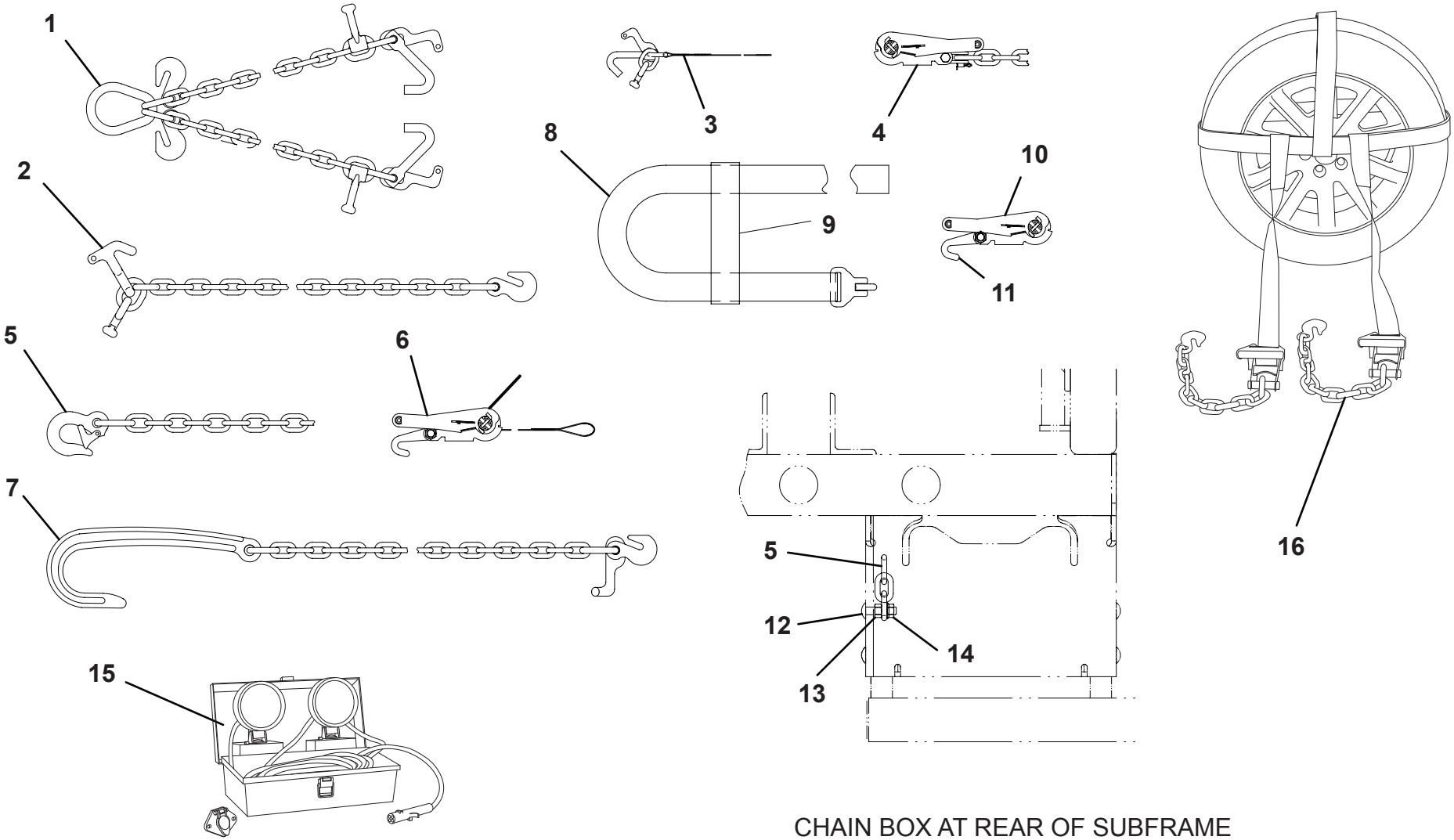

CHAIN BOX AT REAR OF SUBFRAME

TOWING SAFETY TOOLS

ITEM	PART NO.	DESCRIPTION	QTY
1	9002000141*	Wheel Chock	1
2	9900000001*	Shovel	1
3	9900000006*	Maul Axe	1
4	9900000004*	Floor Jack -2.5 Ton	1
5	9900000005*	Floor Jack Handle	1
6	9900000007*	Lug Wrench - Metric	1
7	9900000008*	Lug Wrench - SAE	1
8	9900000002*	Broom Head	1
9	9900000003*	Broom Handle	1
10	9900000009*	Pry Bar	1
11	9611000001*	Wood Crossbeam-4’	1
12	9611000002*	Wood Crossbeam-5’	1
13	9002000142*	Trash Can - 4 Gallon	2
14	9890000002*	Air Tank - 5 Gallon	1
15	9002000143*	Flare - 30 Minute	6
16	9900000010*	Bolt Cutters -24”	1
17	9002000144*	Triangle Flare Kit	1
18	9002000145*	First AID Kit -25 Person	1
19	9002000146*	Snatch Block w/ Hook	1

* also available in Towing Safety Tools Kit, P/N 3577000120

TOWING SAFETY TOOLS

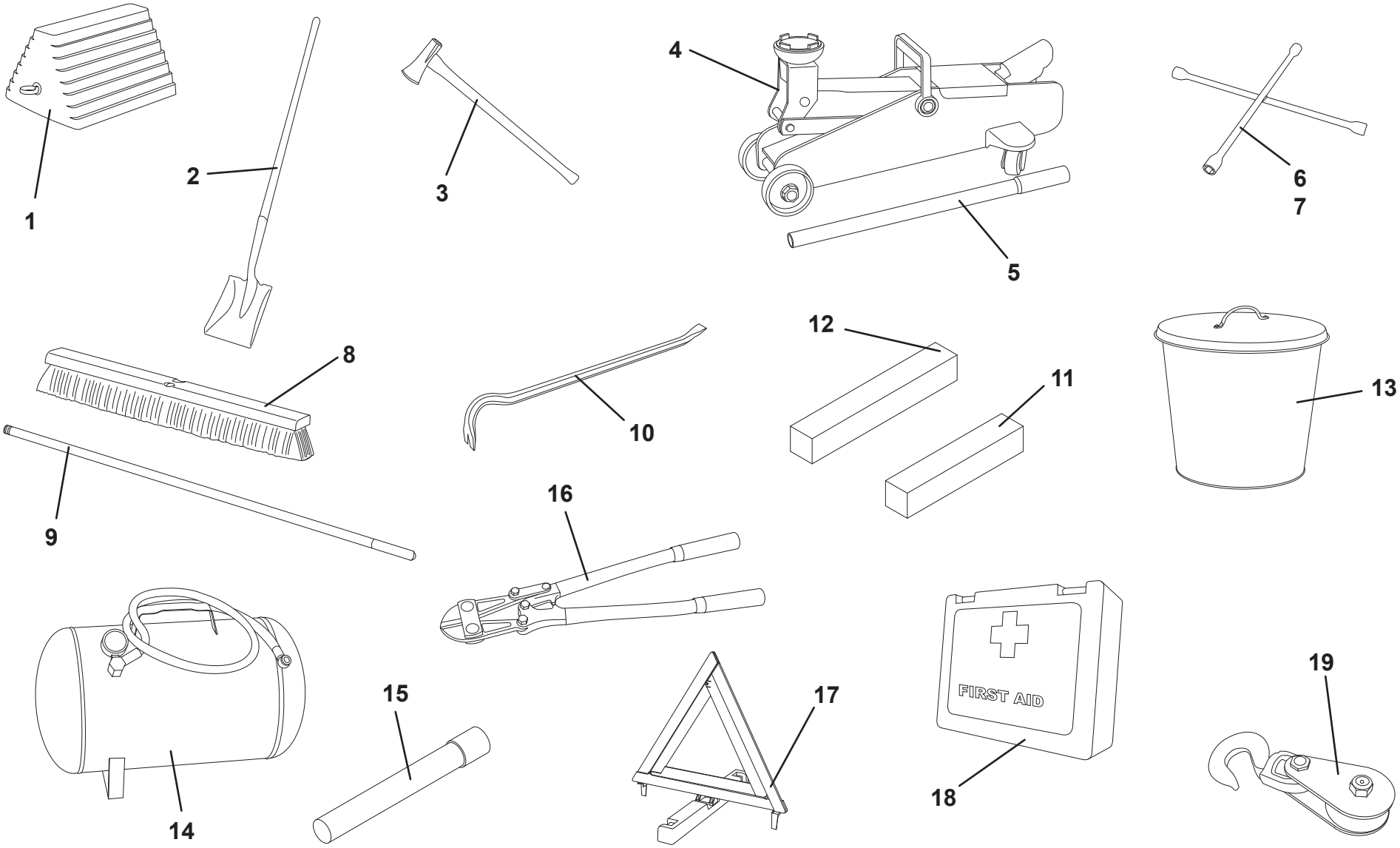

DECALS

ITEM	PART NO.	DESCRIPTION	QTY
1	1001127221	Serial Number Tag	1
2	1001132766	Subframe / Patent Tag	1
3	1001168591	Decal - Slide Pad / Pivot Joint	1
4	1001132764	STAR Placard	1
5	7330000275	Decal - Operator's Pre-Checklist	1
6	7330000242	Decal - Free Spool (bolt-on headboard)	1
	7330000495	Decal - Free Spool (stationary headboard)	
	1001156252	Decal - Dual Free Spool	2
7	7330000478	Decal - Lubrication Chart	1
8	7330000012	Decal - Winch	1
9	1001153789	Jerr-Dan Nameplate	2
10	7330000143	Decal - Made In The USA	1
11	7330000044	Decal - Align Arrow, Red	2
	7330000045	Decal - Align Arrow, White	
12	7330000272	Decal - Oil Level	1
13	7330000330	Decal - Cable Track	1
14	7330000139	Decal - Checklist Reminder	1
15	7330000684	Decal - Safety	1
16	7330000683	Decal - Safety	2
17	7330000060	Decal - Wheel Lift Hitch	1
18	7330000036	Secure Vehicle	2
19	7330000391	Decal - Tow Boom Configuration	1
20	7330000274	Decal - Overloading Tow Option	1
21	7330000599	Decal - Pinch Point	3
22	9330740009	Decal Kit - Muncie PTO	1
23	7759000004	Pop Rivet	12
24	7330000675	Decal - Air Free Spool Control, LH	1
25	7330000676	Decal - Air Free Spool Control, RH	1
26	7330000176	Decal - Air Suspension	1
27	7330000628	Decal - Control Switch (F550 only)	1
28	7330000700	Decal - PTO Operation (LCF & CF600 only)	1
29	7330000385	Decal - T37 Grids	2

DECALS

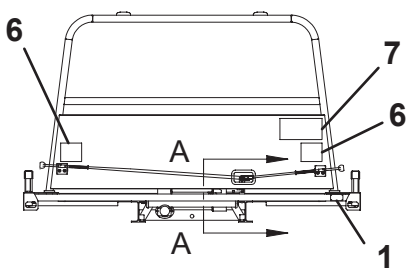

CAB SIDE - STANDARD HEADBOARD

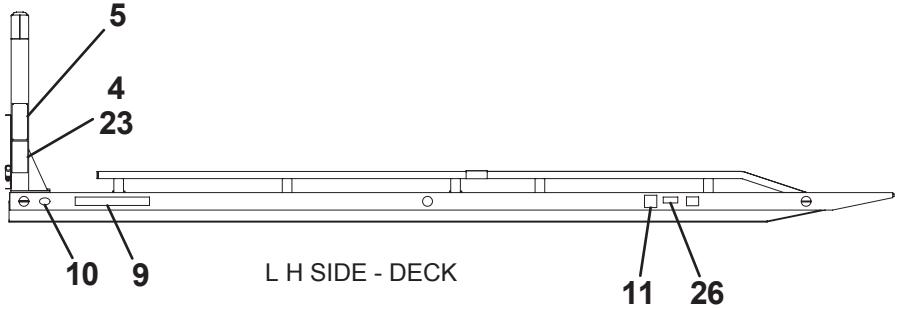

L H SIDE - DECK

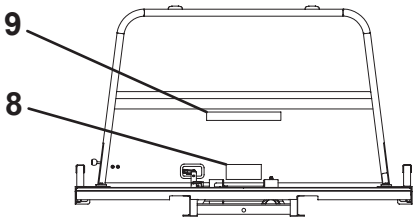

STANDARD / DELUXE HEADBOARD

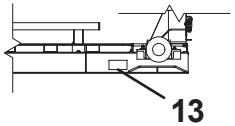

SECTION A-A

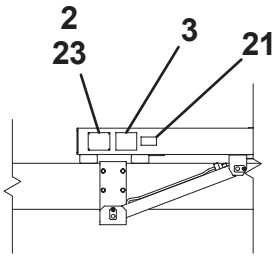

(Both Sides)

L H SIDE SUBFRAME

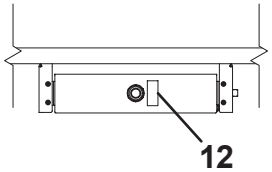

HYDRAULIC TANK

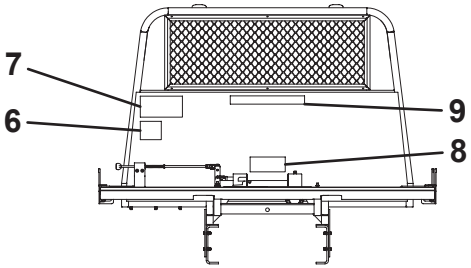

STATIONARY HEADBOARD

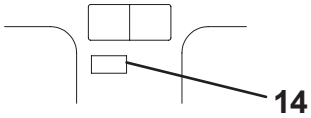

CAB DASHBOARD

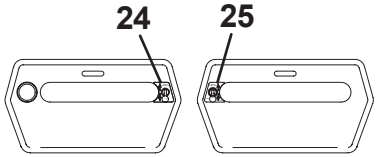

DRIVER SIDE CONTROL HOOD

PASSENGER SIDE CONTROL HOOD

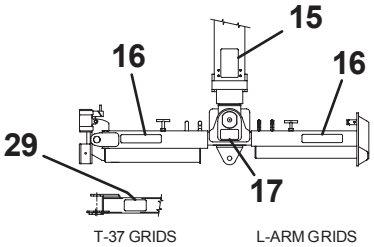

MANUAL GRID WHEEL LIFT

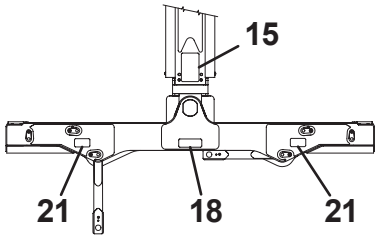

HYDRAULIC GRID WHEEL LIFT

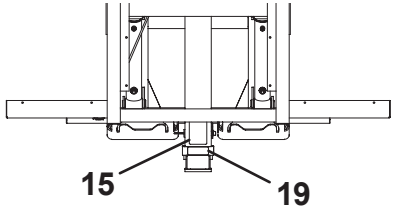

BALL HITCH MOUNTING PLATE or PINTLE HITCH MOUNTING PLATE TOW OPTION

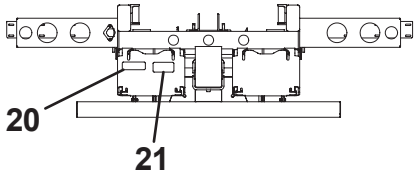

STATIONARY TOW HITCH or PINTLE / REESE ON STABILIZER

Rear of Subframe

WINCH - 8K PLANETARY GEAR W/MANUAL FREESPOOL - 7970000056

ITEM	PART NO.	DESCRIPTION	QTY
1	9970280019	Drum Assembly - Y	1
2	9970960057	Frame Assembly	1
3	9587960009	Shifter Assembly	1
4	9843960027	Spring - Flat, Brake	1
5	70050031	Cam Plate - Brake “A” Rotation	1
6	9472960042	Gear - Output, Sun	1
7	9472960043	Gear - Ring	1
8	9082960033	End Bearing - Motor	1
9	70050616	Housing - Gear, End Bearing	1
10	70050690	Housing - Brake	1
11	9706960084	Hub - Plate	1
12	9706960028	Retaining Plate	1
13	9806960017	Shaft - Input “Y”	1
14	70050691	Tie Plate “Y”	2
15	9970400007	Ball	3
16	9209960022	Bushing - Drum, Motor End	1
17	9209960023	Bushing - Drum, Gear	1
18	9120960021	Bolt, 0.38”-16NC x 1.75”	2
19	9120960025	Capscrew, 0.50”-13NC x 0.75”	16
20	9120960023	Bolt, 0.50”-13NC x 2.25”	1
21	9120960022	Capscrew, 0.25”-20NC x 0.50”	2
22	70050619	Capscrew, 0.31”-18NC x 2.50”	4
23	9786960066	Setscrew, 0.38”16NC x 1.00”	1
24	9120960026	Capscrew, 0.38”-16NC x 2.75”	4
25	9120960061	Capscrew, 0.50”-13NC x 1.50”	2
26	7785140404	Setscrew, 0.25”-20NC x 0.25”	1
27	7660160001	Hexnut, .038”-16NC	4
28	70050628	Jamnut, 0.38”-16NC	1
29	7660180201	Jamnut, 0.50”-13NC	1
30	9970418184	Flatwasher, 0.38” ID	4
31	9949960031	Lockwasher, 0.50” ID	2
32	9309960009	Coupling - Hydraulic Motor	1
33	9706960029	Plate - Brake	2
34	9796960047	Gasket - Brake Housing	1
35	9970456008	Fitting, Relief	1
36	70050692	Motor, Hydraulic	1
37	9796960050	O-Ring	1
38	9796960048	Quad Ring	2
39	9796960051	O-Ring	1
40	9970468002	Reducer	1
41	9701960015	Plug, Pipe	2
42	9691960001	Pin, Spiral	1
43	9701960014	Plug	1
44	9701960016	Plug	1
45	9796960123	Seal	1
46	9796960049	Seal - Gear Housing	1
47	9812960005	Shim	1
48	9754960039	Snap Ring	2
49	9970494010	Spring	1
50	9935960023	Valve - Counterbalance (“A” Rotation)	1
51	9949960017	Washer - Thrust	1
52	9806960031	Brake - Shaft	1
53	9970418163	Lockwasher, 0.31” ID	4

WINCH - 8K PLANETARY GEAR W/MANUAL FREESPOOL - 7970000056

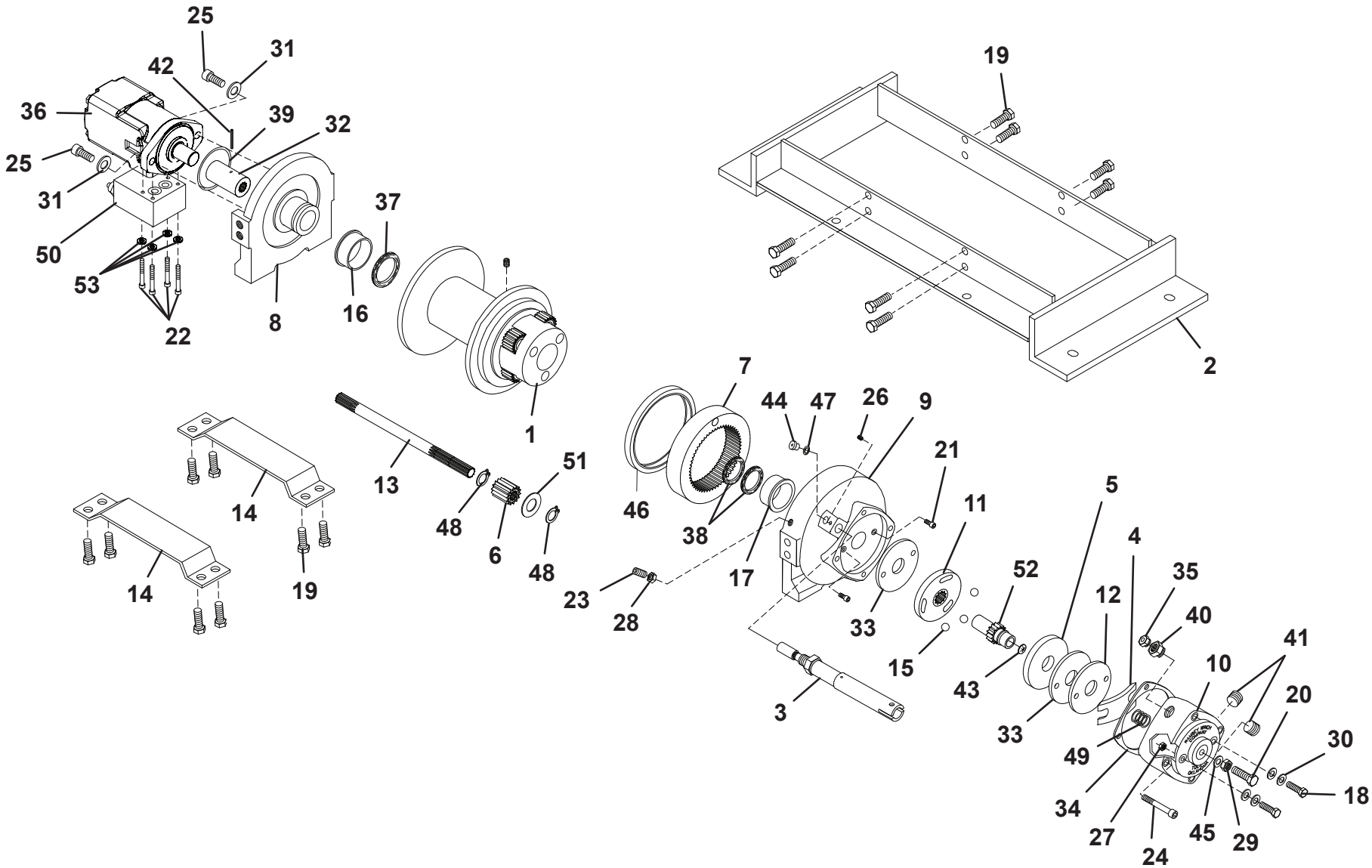

WINCH - 8K WORM GEAR W/ MANUAL FREESPOOL - 7970000121

ITEM	PART NO.	DESCRIPTION	QTY
1	70050694	Frame Assembly	1
2	70050678	Shifter Assembly	1
3	9970300057	Adapter	1
4	9970316083	Bearing Cap	1
5	9970960060	Jaw Clutch	1
6	9314960024	Cover - Gear Housing	1
7	9970960068	Drum - “Std”	1
8	9472960072	Gear R.H. 34:1	1
9	9560960021	Housing - Clutch	1
10	9560960011	Housing - Gear	1
11	9970342027	Key	1
12	9806960009	Shaft - Drum “Std”	1
13	9970960062	Worm R.H. 34:1	1
14	9970402002	Bearing - Ball	2
15	9970412003	Bushing	4
16	9970412045	Bushing	4
17	70050679	Adapter Cover	1
18	9970414045	Capscrew, 0.25”-20NC x 0.88”	14
19	9970518015	Washer - Thrust	1
20	9120960034	Bolt, 0.38”-16NC x 1.00” Lg	2
21	9120960059	Capscrew, 0.38”-16NC x 1.25”	6
22	70050682	Capscrew, 0.25”-20NC x 1.75”	4
23	9120960061	Capscrew, 0.50”-13NC x 1.50”	2
24	9786960015	Setscrew, 0.38”-16NC x 0.50”	1
25	9970418177	Lockwasher, 0.38” ID	8
26	9007960003	Adapter - Rod	1
27	9970431008	Coupling	1
28	9970330010	Disc Brake	2
29	9970442184	Gasket	2
30	9970442205	Gasket	1
31	9970450006	Barth Key	2
32	9575960014	Barth Key	4
33	9970518014	Washer - Thrust	1
34	9970456008	Fitting, Relief	1
35	9701960015	Plug, Pipe	1
36	9970468011	Plug, Pipe	2
37	9691960035	Pin, Spiral	1
38	9691960001	Pin, Spiral	1
39	9970494053	Spring	1
40	9970472013	Plug	1
41	9970486009	Seal, Oil	1
42	9970486017	Seal, Oil	1
43	9970494002	Spring	2

WINCH - 8K WORM GEAR W/ MANUAL FREESPOOL - 7970000121

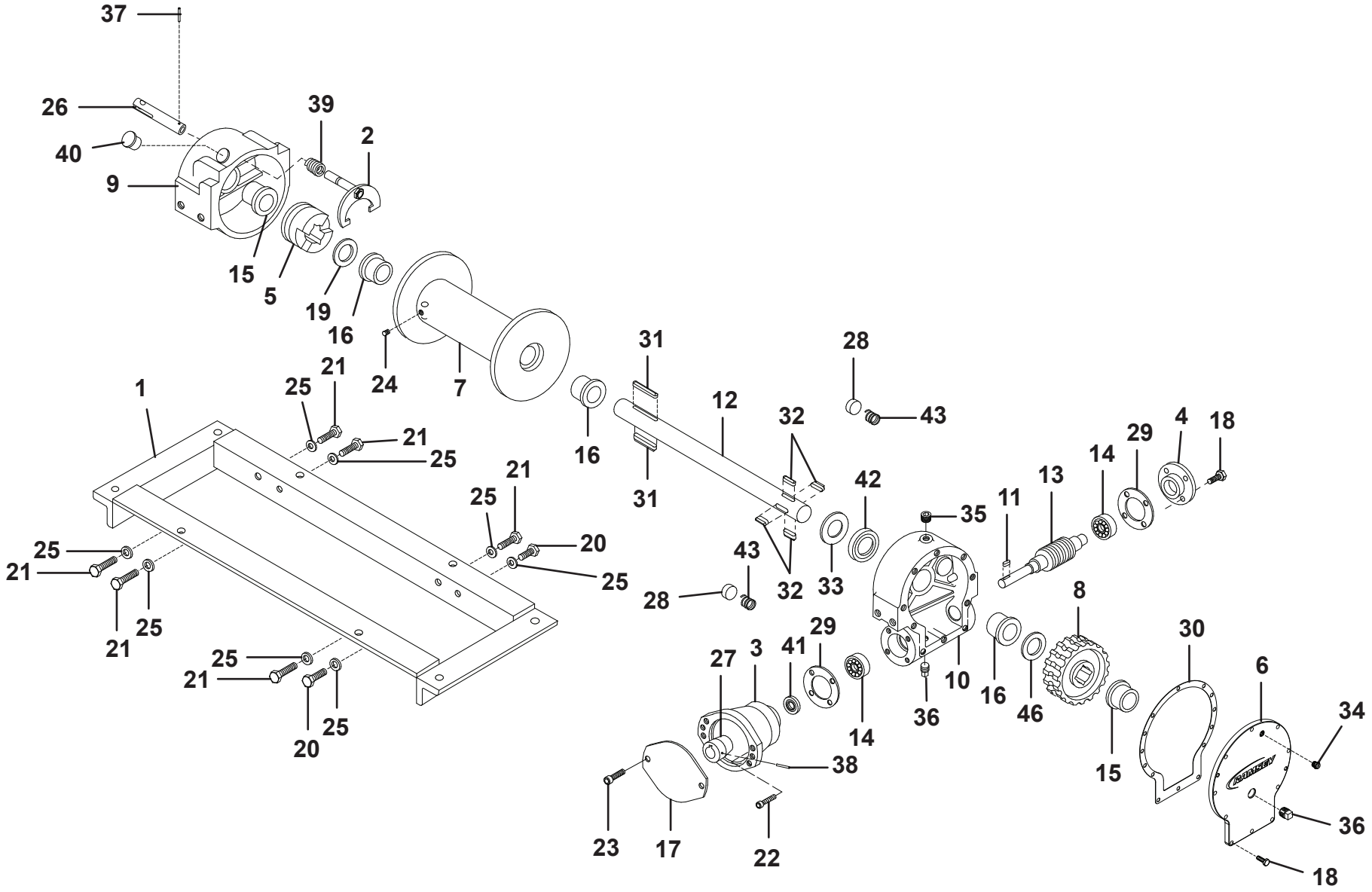

WINCH -10K WORM GEAR W/ MANUAL FREESPOOL - 7970000123

ITEM	PART NO.	DESCRIPTION	QTY
1	70050677	Frame Assembly	1
2	70050678	Shifter Assembly	1
3	9970300057	Adapter	1
4	9970960036	Spring - Flat	1
5	1001126187	Plate - Cam	1
6	9970960060	Jaw Clutch	1
7	9309960020	Coupling	1
8	9970960034	Cover - Brake	1
9	9314960024	Cover - Gear Housing	1
10	9970960068	Drum - Cable	1
11	9472960068	Gear R.H. 30:1	1
12	9571960010	Housing - Brake	1
13	9560960011	Housing - Gear	1
14	9560960021	Housing - Clutch	1
15	1001126188	Hub- Brake	1
16	9970342027	Key	3
17	1001126192	Plate - Retainer	1
18	9970960051	Shaft - Drum	1
19	9472960069	Worm R.H. 30:1	1
20	9970400003	Ball	2
21	9970402002	Bearing - Ball	2
22	9970412003	Bushing	4
23	9970960052	Bushing	1
24	70050679	Cover - Adapter	1
25	9970960038	Capscrew, 0.25”-20NC x 1.00” All Thrd	2
26	9970414045	Capscrew, 0.25”-20NC x 0.75”	10
27	70050680	Capscrew, 0.25”-20NC x 1.00”	4
28	9120960075	Capscrew, 0.38”-16NC x 1.50”	1
29	9120960034	Capscrew, 0.38”-16NC x 1.00”	2
30	9120960059	Capscrew, 0.38”-16NC x 1.25”	6
31	70050681	Capscrew, 0.25”-20NC x 0.88”	4
32	70050682	Capscrew, 0.25”-20NC x 1.75”	4
33	9120960061	Capscrew, 0.50”-13NC x 1.50”	2
34	9786960015	Setscrew, 0.38”-16NC x 0.50”	1
35	70050628	Jamnut, 0.38”-16NC	1
36	9949960054	Flatwasher, 0.25” ID	2
37	9970418177	Lockwasher, 0.38” ID	8
38	9007960003	Adapter - Rod	1
39	9970330010	Disc - Brake	2
40	9970442184	Gasket	2
41	9796960139	Gasket	1
42	9970442205	Gasket	1
43	9970450006	Barth Key	2
44	9575960014	Barth Key	4
45	9970412045	Bushing	2
46	9970456008	Fitting, Relief	1
47	9701960015	Plug, Pipe	1
48	9970468011	Plug, Pipe	2
49	9691960035	Pin, Spiral	1
50	9691960001	Pin, Spiral	1
51	9970518015	Washer - Thrust	2
52	9970472013	Plug	1
53	9970960037	Plate - Thrust	1
54	9970486009	Seal, Oil	1
55	9970486017	Seal, Oil	1
56	9796960176	Seal, Thread	1
57	9796960177	Seal, Thread	4
58	9970494002	Spring	2
59	9970960035	Spring	1
60	9970494053	Spring	1
61	9970518014	Washer - Thrust	1

WINCH -10K WORM GEAR W/ MANUAL FREESPOOL - 7970000123

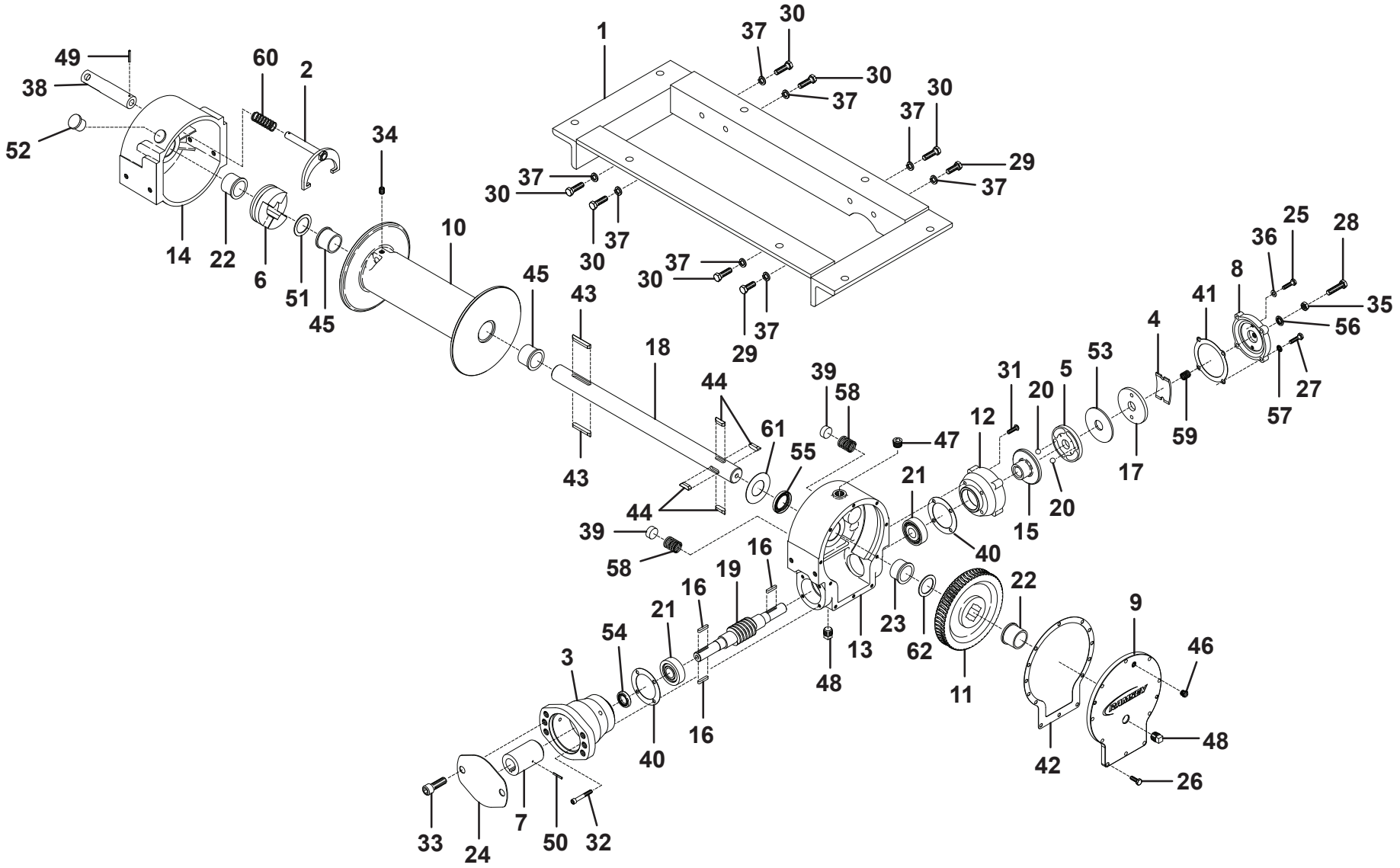

WINCH -10K WORM GEAR W/ AIR FREESPOOL - 7970000140

ITEM	PART NO.	DESCRIPTION	QTY
1	70050677	Frame Assembly	1
2	70050684	Housing - Clutch	1
3	9970300057	Adapter	1
4	9970960036	Spring - Flat	1
5	1001126187	Plate - Cam	1
6	9309960020	Coupling	1
7	9970960060	Jaw Clutch	1
8	9970960034	Cover - Brake	1
9	9314960024	Cover - Gear Housing	1
10	9970960068	Drum - Cable	1
11	9472960068	Gear R.H. 30:1	1
12	9571960010	Housing - Brake	1
13	9560960011	Housing - Gear	1
14	1001126188	Hub- Brake	1
15	9970342027	Key	3
16	1001126192	Plate - Retainer	1
17	9970960051	Shaft - Drum	1
18	9472960069	Worm R.H. 30:1	1
19	70050685	Yoke	1
20	9970400003	Ball	2
21	9970402002	Bearing - Ball	2
22	9970412003	Bushing	4
23	9970960052	Bushing	1
24	70050679	Cover - Adapter	1
25	9970960038	Capscrew, 0.25”-20NC x 1.00” All Thrd	2
26	9970414045	Capscrew, 0.25”-20NC x 0.75”	10
27	70050680	Capscrew, 0.25”-20NC x 1.00”	4
28	9120960075	Capscrew, 0.38”-16NC x 1.50”	1
29	9120960034	Capscrew, 0.38”-16NC x 1.00”	2
30	9120960059	Capscrew, 0.38”-16NC x 1.25”	6
31	70050681	Capscrew, 0.25”-20NC x 0.88”	4
32	70050682	Capscrew, 0.25”-20NC x 1.75”	4
33	9120960061	Capscrew, 0.50”-13NC x 1.50”	2
34	9786960015	Setscrew, 0.38”-16NC x 0.50”	1
35	70050686	Screw, #6-32NC x 1.00”	4
36	70050628	Jamnut, 0.38”-16NC	1
37	70050687	Locknut, 0.38”-16NC ID	1
38	70050688	Lockwasher, #6 ID	4
39	9949960054	Flatwasher, 0.25” ID	2
40	9970418177	Lockwasher, 0.38” ID	8
41	9443960021	Fitting, Elbow	1
42	70050065	Cylinder, Air	1
43	9970330010	Disc - Brake	2
44	9970442184	Gasket	2
45	9796960139	Gasket	1
46	9970442205	Gasket	1
47	9970450006	Barth Key	2
48	9575960014	Barth Key	4
49	9970456008	Fitting, Relief	1
50	9183960002	Breather Vent	1
51	9970468011	Plug, Pipe	2
52	9701960015	Plug, Pipe	1
53	9691960001	Pin, Spiral	1
54	9970472013	Plug	1
55	9970960037	Plate - Thrust	1
56	9970486009	Seal, Oil	1
57	9970486017	Seal, Oil	1
58	9796960176	Seal, Thread	1
59	9796960177	Seal, Thread	4
60	70050689	Shim	1
61	9970494002	Spring	2
62	9970960035	Spring	1
63	9970494053	Spring	1
64	9970518014	Washer - Thrust	1
65	9970518015	Washer - Thrust	2
66	9970412045	Bushing	2

WINCH -10K WORM GEAR W/ AIR FREESPOOL - 7970000140

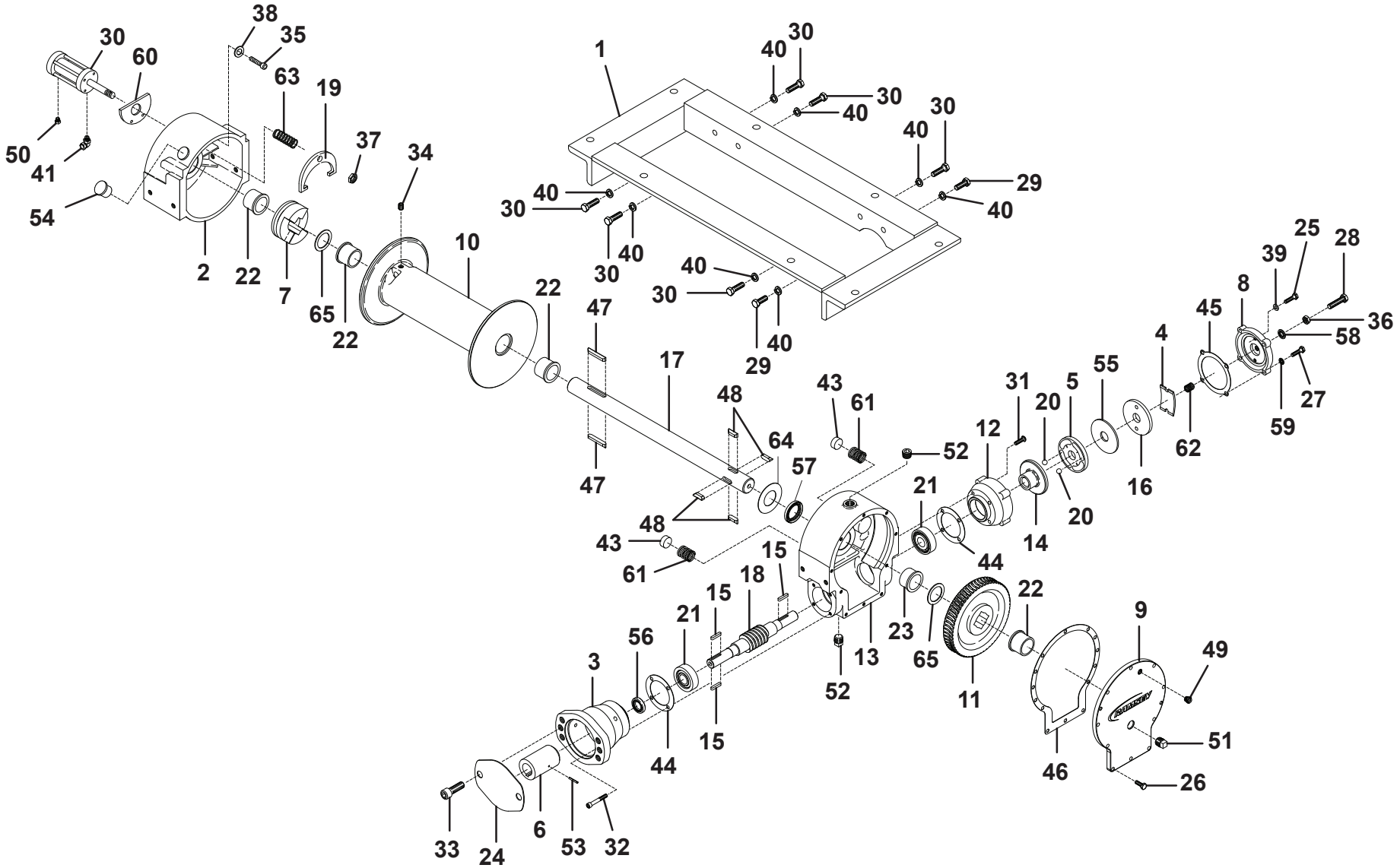

WINCH - 8K WORM GEAR W/ AIR FREESPOOL - 7970000142

ITEM	PART NO.	DESCRIPTION	QTY
1	70050694	Frame Assembly	1
2	70050695	Coupling Assembly	1
3	9970300057	Adapter	1
4	9970316083	Bearing Cap	1
5	9970960060	Jaw Clutch	1
6	9314960024	Cover - Gear HSG	1
7	9970960068	Drum - “Std”	1
8	9472960072	Gear, Worm	1
9	9560960011	Housing - Gear	1
10	70050696	Housing - Clutch	1
11	9970342027	Key	1
12	9806960009	Shaft - Drum	1
13	9970960062	Worm	1
14	70050697	Yoke	1
15	9970402002	Bearing - Ball	2
16	9970412003	Bushing	2
17	9970412045	Bushing	3
18	70050679	Adapter Cover	1
19	9970414045	Capscrew, 0.25”-20NC x 0.88”	14
20	9120960034	Bolt, 0.38”-16NC x 1.00”	2
21	9120960059	Capscrew, 0.38”-16NC x 1.25”	6
22	70050682	Capscrew, 0.25”-20NC x 1.75”	4
23	9120960061	Capscrew, 0.50”-13NC x 1.50”	2
24	9786960015	Setscrew, 0.38”-16NC x 0.50”	1
25	70050686	Screw, #6-32NC x 1.00”	4
26	70050687	Locknut, 0.38”-16NC ID	1
27	70050688	Lockwasher, #6 ID	4
28	9970415177	Lockwasher, 0.38” ID	8
29	70050698	Fitting, Elbow	1
30	70050065	Cylinder, Air	1
31	9970330010	Disc Brake	2
32	9970442184	Gasket	2
33	9970442205	Gasket	1
34	9970450006	Key	2
35	9575960014	Key	4
36	9970518015	Washer - Thrust	2
37	9970456008	Fitting, Relief	1
38	9183960002	Breather Vent	1
39	9970468011	Plug, Pipe	3
40	9701960015	Plug, Pipe	1
41	9970518014	Washer - Thrust	1
42	9970472013	Plug	1
43	9970486009	Seal, Oil	1
44	9970486017	Seal, Oil	1
45	70050689	Shim	1
46	9970494002	Spring	2
47	9970494053	Spring	1

WINCH - 8K WORM GEAR W/ AIR FREESPOOL - 7970000142

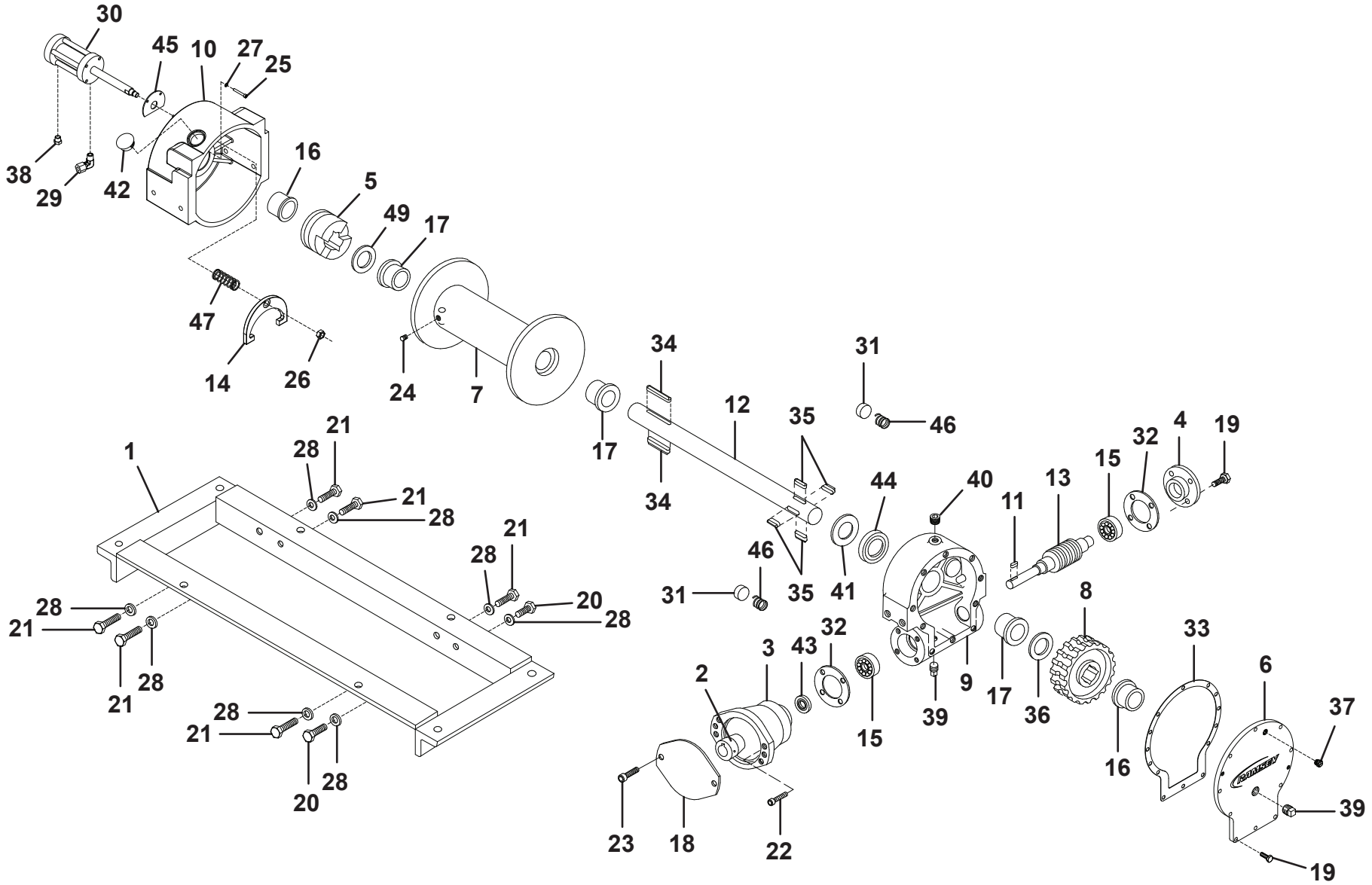

WINCH -10K PLANETARY GEAR W/ MANUAL FREESPOOL - 7970000158

ITEM	PART NO.	DESCRIPTION	QTY
1	70050525	Drum Assembly “Y”	1
2	9551960018	Shifter Assembly	1
3	70050625	Cover - Gear Housing	1
4	70050612	Stator - Brake	6
5	70050613	Disc Brake	5
6	70050614	Piston Brake	1
7	70050615	Piston Brake Backup	1
8	9472960042	Gear - Output, Sun	1
9	70050616	End Bearing - Gear housing	1
10	70050456	End Bearing - Motor	1
11	70050617	Shaft - Input “Y” Drum	1
12	70050618	Plate - Tie “Y” Drum	2
13	9209960023	Bushing - Drum	1
14	70050457	Bushing - Drum, Motor End	1
15	70050619	Capscrew, 0.31”-18NC x 2.50”	4
16	9120960025	Capscrew, 0.50”-13NC x 0.75”	8
17	9120960081	Capscrew, 0.38”-16NC x 0.75”	4
18	9786960006	Setscrew, 0.38”-16NC x 1.00”	1
19	70050627	Capscrew, 0.50”-13NC x 1.75”	2
20	7785140404	Setscrew, 0.25”-20NC x 0.25”	1
21	70050620	Screw, #10-24NC x 0.38”	2
22	70050628	Jamnut, 0.38”-16NC	1
23	9970418163	Lockwasher, 0.31” ID	4
24	9949960031	Lockwasher, 0.50” ID	2
25	70050621	Coupling - Motor	1
26	9443960010	Fitting	2
27	9796960047	Gasket	1
28	70050458	Gasket	1
29	9472960043	Gear - Ring	1
30	9183960002	Fitting, Vent	1
31	9626960027	Motor - Hydraulic	1
32	70050459	O-Ring	1
33	70050460	O-Ring	1
34	70050461	O-Ring	1
35	70050462	Ring - Backup	1
36	70050463	Ring - Backup	1
37	70050464	Ring - Backup	1
38	70050465	O-Ring	1
39	9691960001	Pin, Spiral	1
40	9701960016	Plug	1
41	9796960049	Seal	1
42	9754960039	Snap Ring	2
43	70050466	Ring - Internal Retaining	2
44	70050626	Ring - Internal Retaining	1
45	70050622	Spring - Brake	11
46	9912960035	Tube - Brake Release (Ports Up)	1
47	9935960142	Valve - Motor Contorl “B” Rotation	1
48	9812960005	Washer - Thrust	1
49	9949960017	Washer - Thrust	1

WINCH -10K PLANETARY GEAR W/ MANUAL FREESPOOL - 7970000158

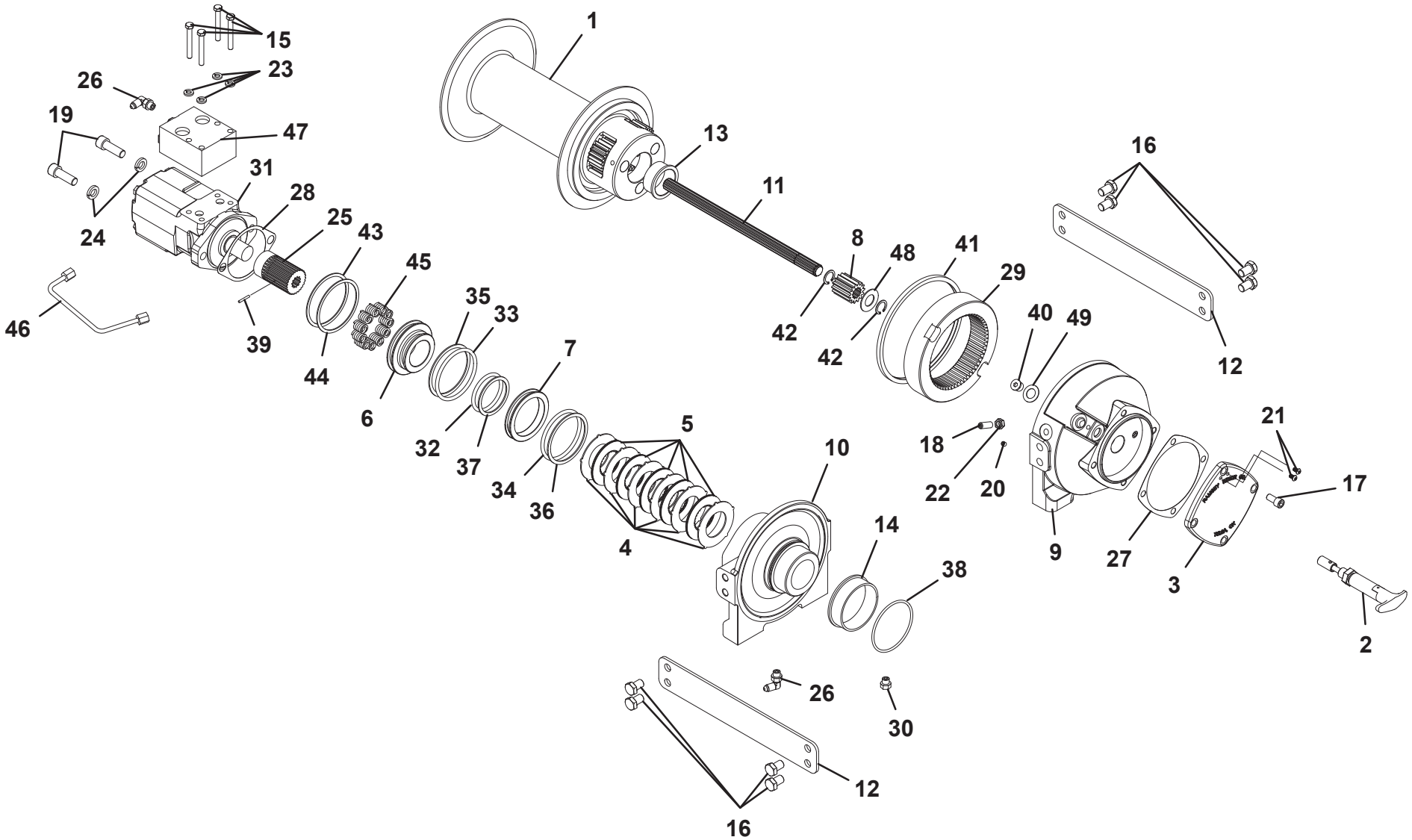

WINCH -10K PLANETARY GEAR W/ AIR FREESPOOL - 7970000166

ITEM	PART NO.	DESCRIPTION	QTY
1	70050525	Drum Assembly “Y”	1
2	9812960005	Shifter Assembly	1
3	70050662	Decal - Slide Pad / Pivot Joint	1
4	9949960017	Washer - Thrust	1
5	70050625	Cover - Gear Housing	1
6	70050612	Stator - Brake	6
7	70050613	Disc Brake	5
8	70050614	Piston Brake	1
9	70050615	Piston Brake Backup	1
10	9742960064	Gear - Output, Sun	1
11	70050616	End Bearing - Gear housing	1
12	70050456	End Bearing - Motor	1
13	70050617	Shaft - Input “Y” Drum	1
14	70050618	Plate - Tie “Y” Drum	2
15	9209960023	Bushing - Drum	1
16	70050457	Bushing - Drum, Motor End	1
17	70050619	Capscrew, 0.31”-18NC x 2.50”	4
18	9120960025	Capscrew, 0.50”-13NC x 0.75”	8
19	9120960081	Capscrew, 0.38”-16NC x 0.75”	4
20	9786960006	Setscrew, 0.38”-16NC x 1.00”	1
21	70050627	Capscrew, 0.50”-13NC x 1.75”	2
22	7785140404	Setscrew, 0.25”-20NC x 0.25”	1
23	70050620	Screw, #10-24NC x 0.38”	2
24	70050628	Jamnut, 0.38”-16NC	1
25	9970418163	Lockwasher, 0.31” ID	4
26	9949960031	Lockwasher, 0.50” ID	2
27	70050621	Coupling - Motor	1
28	9443960010	Fitting	2
29	9796960047	Gasket	1
30	70050458	Gasket	1
31	9472960043	Gear - Ring	1
32	9183960002	Fitting, Vent	1
33	9626960027	Motor - Hydraulic	1
34	70050459	O-Ring	1
35	70050460	O-Ring	1
36	70050461	O-Ring	1
37	70050462	Ring - Backup	1
38	70050463	Ring - Backup	1
39	70050464	Ring - Backup	1
40	70050465	O-Ring	1
41	9691960001	Pin, Spiral	1
42	9701960016	Plug	1
43	9796960049	Seal	1
44	70050100	Shim	2
45	9754960039	Snap Ring	2
46	70050466	Ring - Internal Retaining	1
47	70050626	Ring - Internal Retaining	1
48	70050622	Spring - Brake	11
49	9912960035	Tube - Brake Release (Ports Up)	1
50	70050701	Valve - Motor Control “A” Rotation	1

WINCH -10K PLANETARY GEAR W/ AIR FREESPOOL - 7970000166

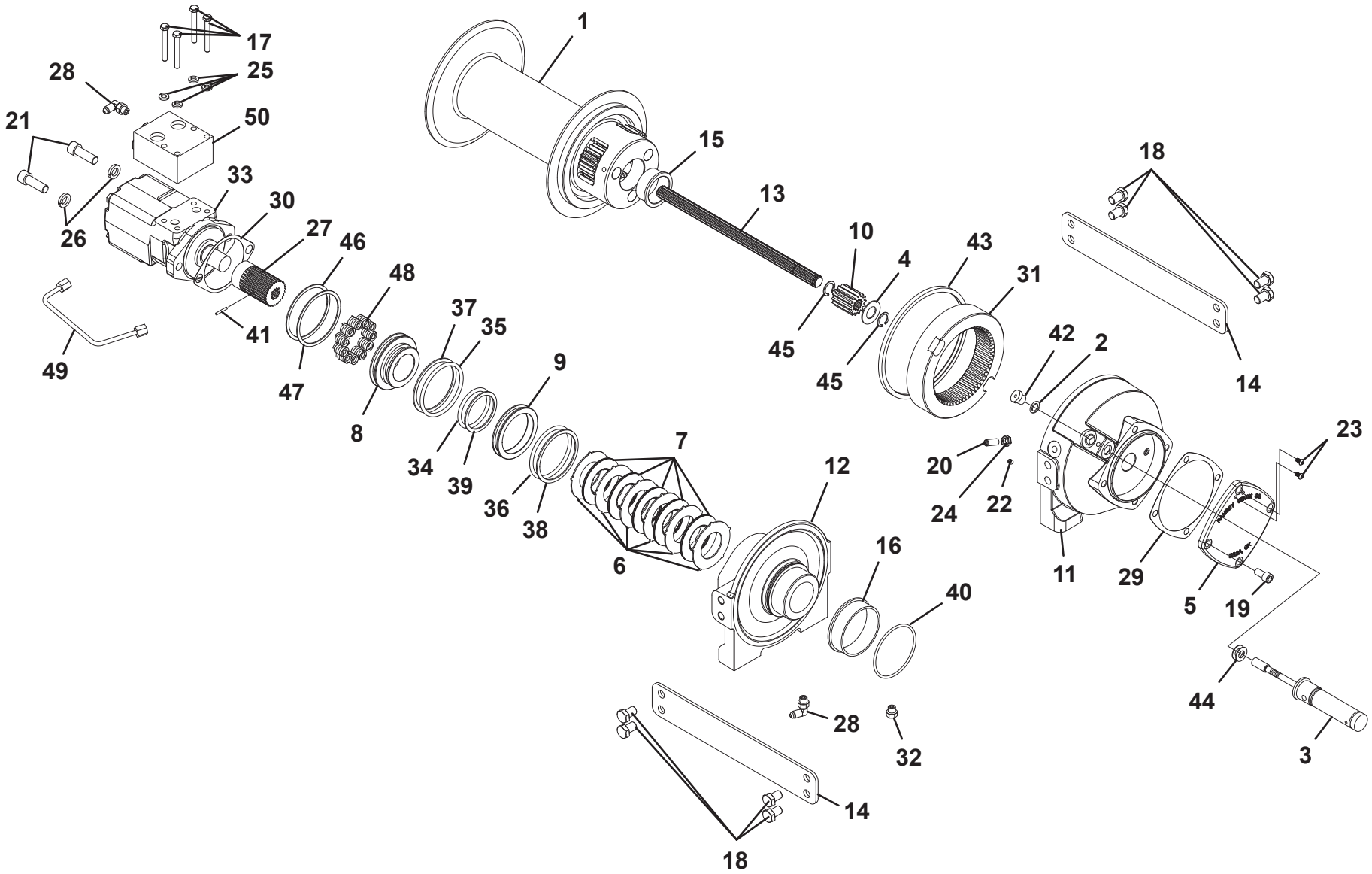

LIGHTBAR 58” CODE3 - 1001136989 & 1001136993

ITEM	PART NO.	DESCRIPTION	QTY
1	9590310197	Lens, Clear Upper Outboard	2
2	70050012	Lens, Clear Lower Outboard	2
3	9590310203	Lens, Clear Lower Center	2
4	70050164	Light, LED Work	2
5	1001130702	Light, LED Stop/Tail/Turn	2
6	9590310206	Light, Amber LED Corner Module	4
	70050721	Light, Red LED Corner Module	4
7	70050166	Bracket	2
8	9590310205	Light, Amber LED Module	6
	70050722	Light, Red LED Module	6
9	9590310202	Bracket, Center	6
10	70050167	Controller, Central	1
11	9552310007	Harness	1

LIGHTBAR 58” CODE3 - 1001136989 & 1001136993

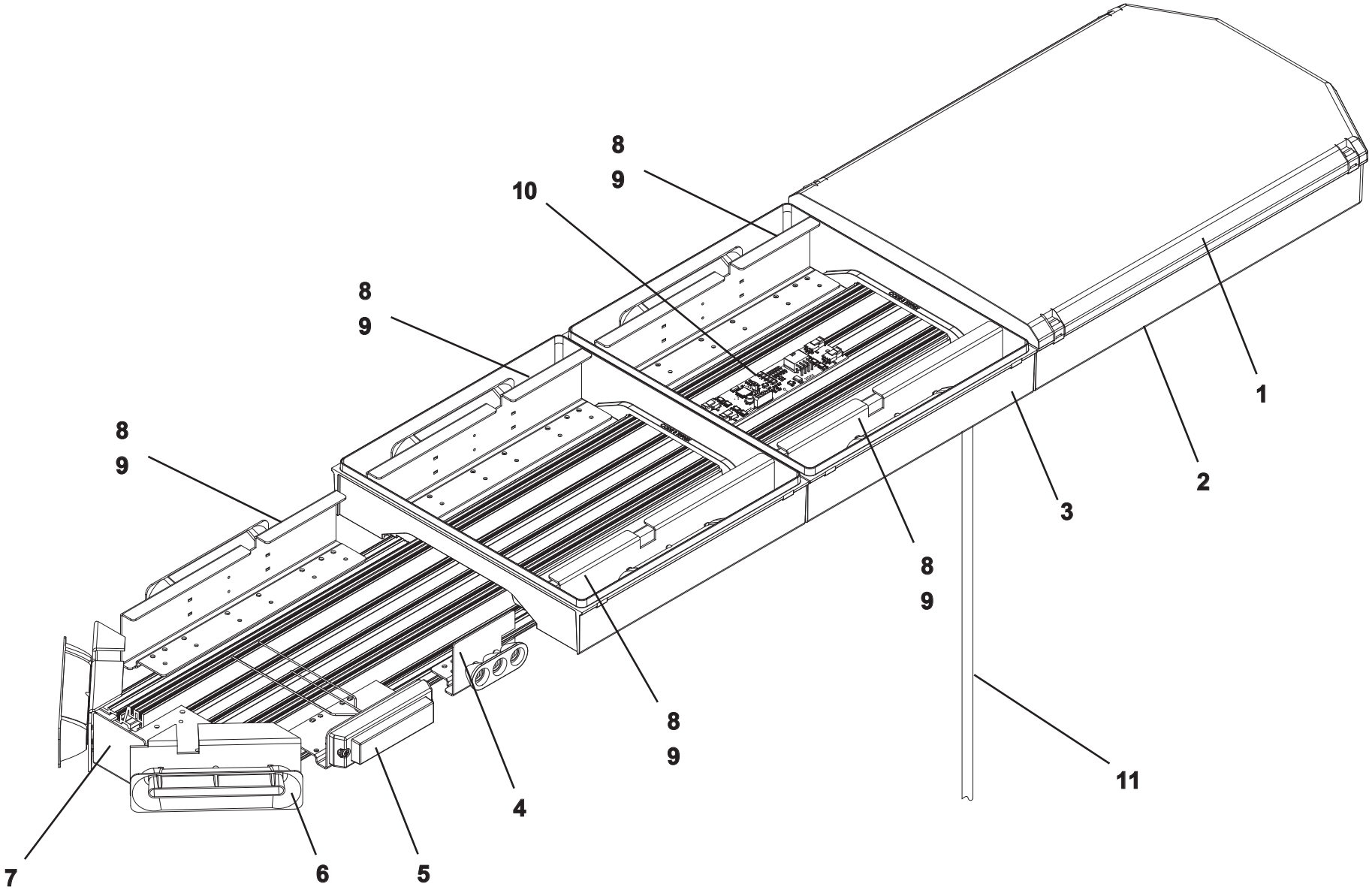

LIGHTBAR 60” WHELEN - 7590000403

ITEM	PART NO.	DESCRIPTION	QTY
1	70050663	Base	1
2	70050169	Grommet	1
3	70050170	Plug	2
4	70050163	Assembly, HC I/O Liberty, Jerr-Dan	1
5	70050664	Cable	1
6	70050207	Label, Model & Serial Number	1
7	70050172	Screw, #10-24NC x 1.00”	1
8	70050665	Clamp	1
9	70050174	Wixnut, #10-24NC	1
10	70050175	Housing	2
11	70050182	Housing	12
12	70050183	LR11 TD Single Full 20 Deg.	2
13	70050666	Harness	2
14	70050185	Harness	1
15	70050186	Harness	1
16	70050187	Light Assembly, LED	6
17	70050188	500 BTT Max	2
18	70050189	Panel	4
19	70050190	End Support Bracket	2
20	70050191	Insulator	1
21	70050192	Decal	1
22	70050193	Top, Extruded	1
23	70050194	Screw #10-24NC x 0.38”	4
24	70050195	Spacer	4
25	70050196	Corner LED Assembly	4
26	70050197	Spacer	4
27	70050198	Lens	2
28	70050199	Lens	4
29	70050200	Lens	4
30	70050201	Lens Divider	8
31	70050667	End Cap	2
32	70050203	Screw, #10-24NC x 1.25”	8
33	70050204	Rotational MTG Adapter	2
34	70050205	Label, “Front”	1
35	70050206	Label, Jerr-Dan Logo	1

LIGHTBAR 60” WHELEN - 7590000403

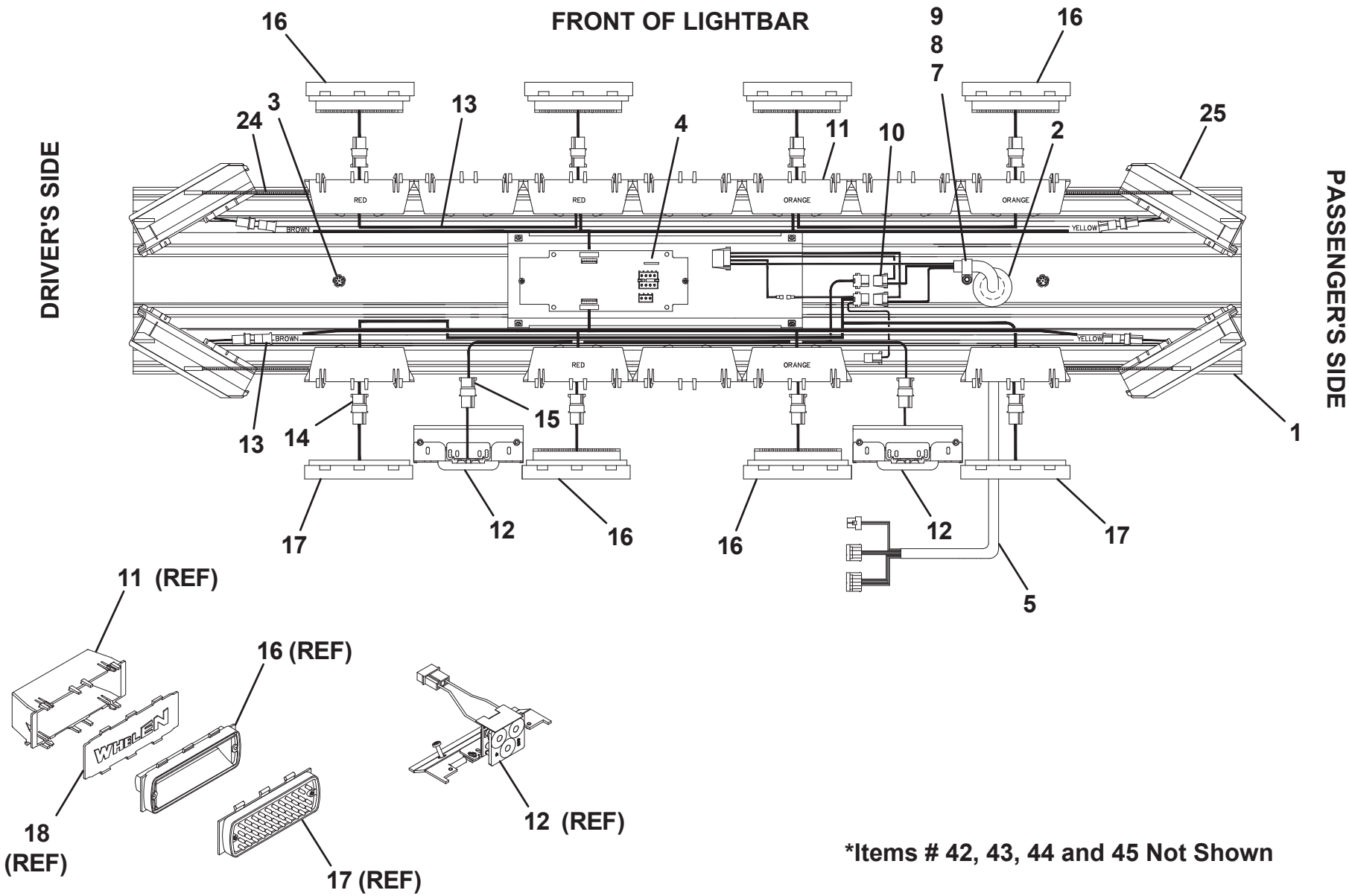

*Items # 42, 43, 44 and 45 Not Shown

LIGHTBAR 60” WHELEN - 7590000403

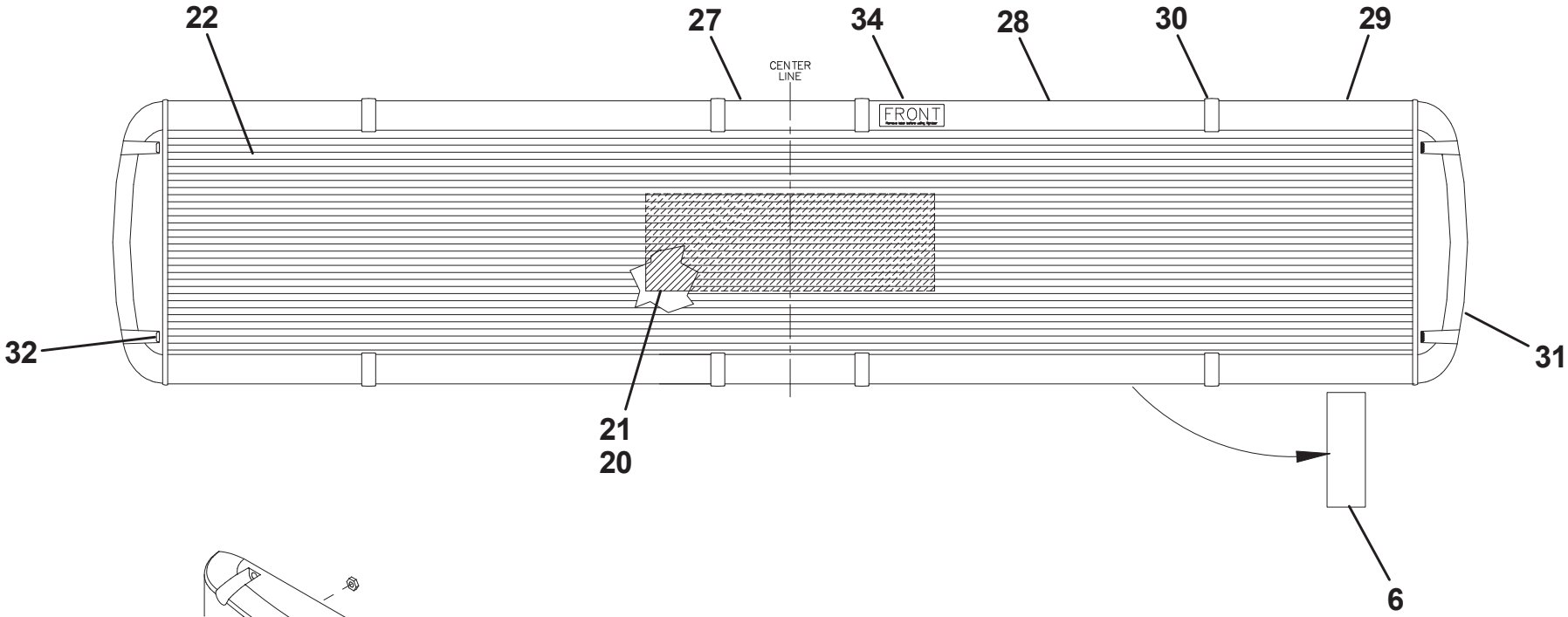

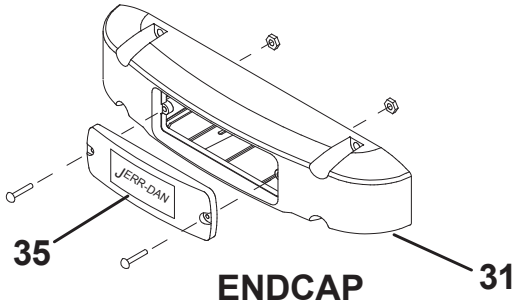

ENDCAP

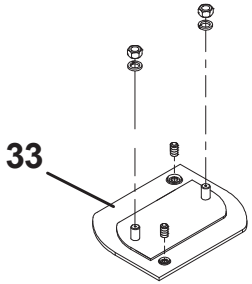

ROTATIONAL MTG ADAPTER

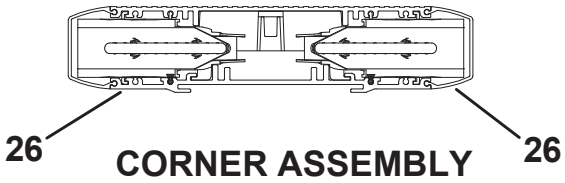

CORNER ASSEMBLY

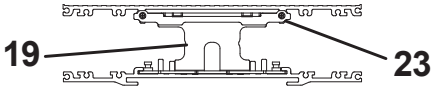

END SUPPORT DETAIL

LIGHTBAR 60” WHELEN - 7590000403

THIS PAGE INTENTIONALLY LEFT BLANK

TG SERIES PTO INSTALLATION - ELECTRIC/AIR SHIFT

ITEM	PART NO.	DESCRIPTION	QTY
1	70050308	Nipple, Pipe	1
2	9935740034	Pressure Protection Valve	1
3	70050309	Fitting	3
4	70050310	Fitting	1
5	9346760019	12v Solenoid Valve	1
	70050311	24v Solenoid Valve	1
6	7565000019	Tubing,	30ft
7	70050312	Wire	30ft
8	70050313	Terminal	1
9	70050314	Terminal	3
10	70050315	Butt Splice	3
11	70050316	Fuse Assembly	1
12	7706000005	Dash Bracket	1
13	7706000003	Face Plate	1
14	7870000045	Switch 12VDC	1
	70050317	Switch 24VDC	1
15	70050318	Connector	1
16	70050319	Bolt Kit	1

TG SERIES PTO INSTALLATION - ELECTRIC/AIR SHIFT

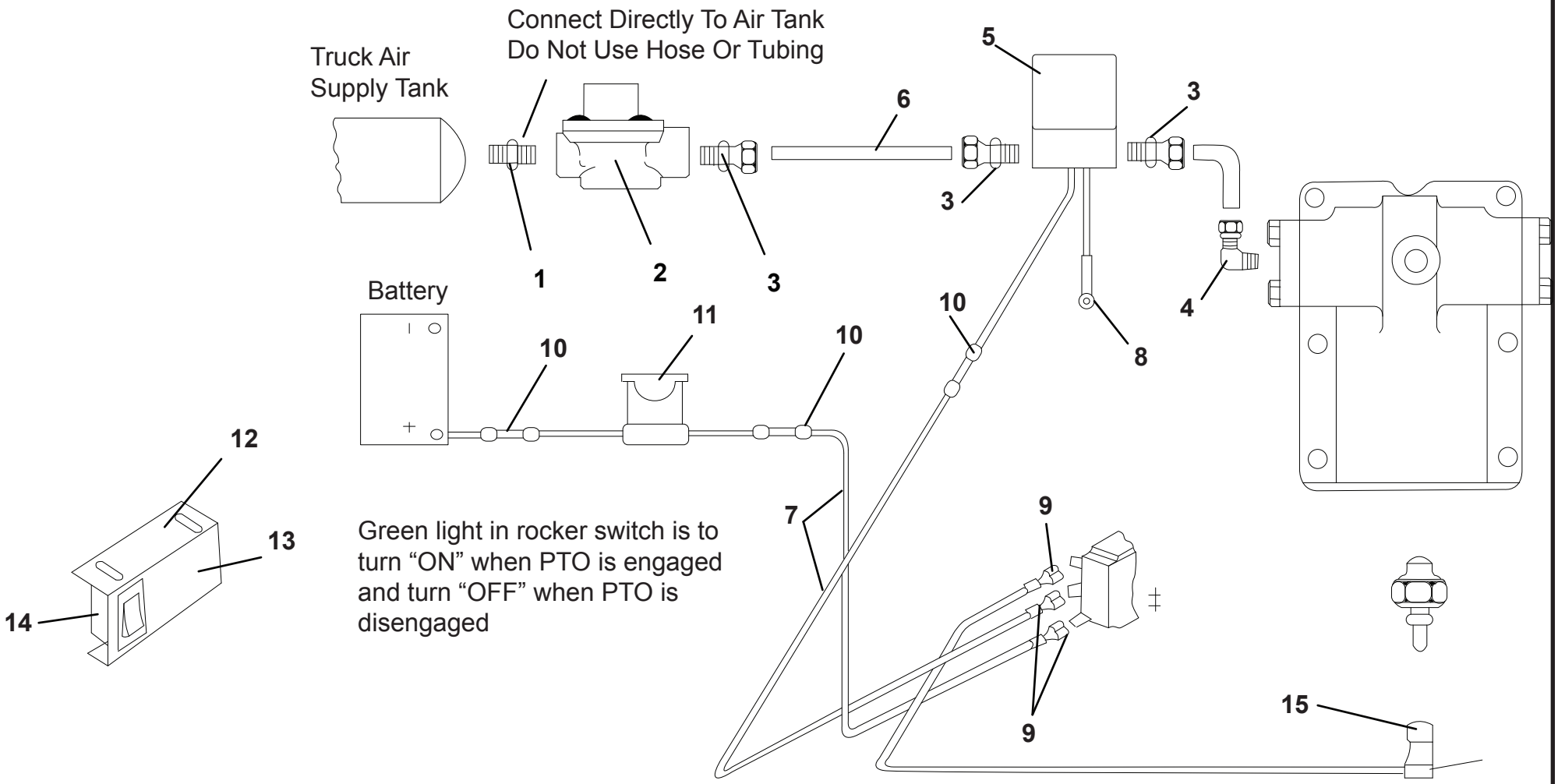

TG SERIES PTO INSTALLATION - AIR SHIFT

ITEM	PART NO.	DESCRIPTION	QTY
1	70050308	Pipe Nipple	1
2	9935740034	Pressure Protection Valve	1
3	70050309	Fitting	1
4	70050310	Fitting	2
5	70050320	Fitting	1
6	7565000019	Tubing	30ft
7	70050312	Wire	12ft
8	70050316	Fuse Assembly	1
9	70050315	Butt Splice	3
10	70050318	Connector	1
11	7590000049	12V Light	1
12	70050321	24V Light	1
13	7935000104	Air Valve	1
14	70050322	Dash Bracket	1
15	7706000004	Face Plate	1
16	70050319	Bolt Kit	1

TG SERIES PTO INSTALLATION - AIR SHIFT

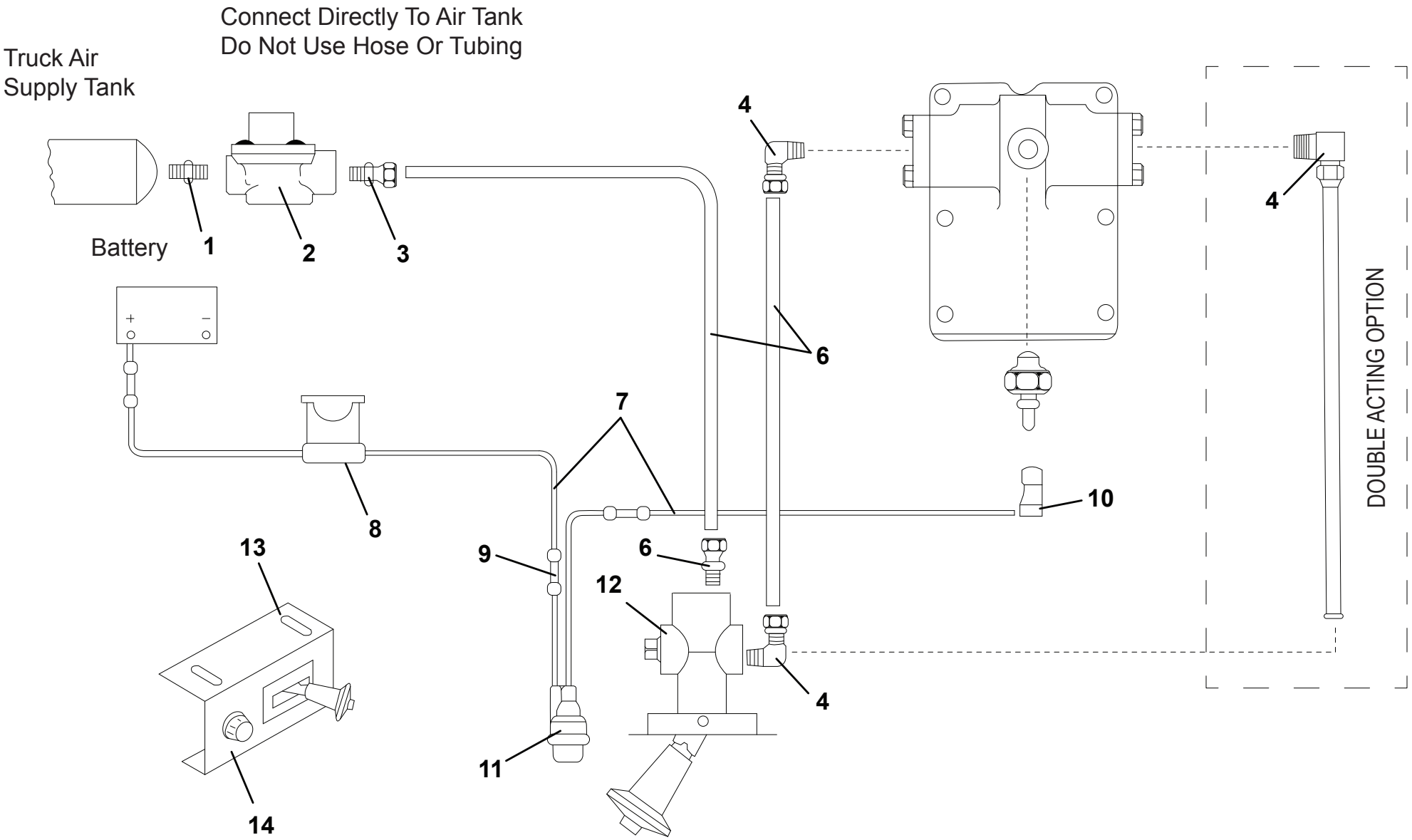

TG SERIES PTO INSTALLATION - E-HYDRA SHIFT

ITEM	PART NO.	DESCRIPTION	QTY
1	70050323	Face Plate	1
2	7706000005	Dash Bracket	1
3	70050324	Light, 12VDC	1
4	9870310035	Switch	1
5	9552310025	Wire Harness	1
6	70050660	Grommet	1
NS	70050319	Kit, Bolt	1
NS	9330740011	Dash Label	1
NS	9330740010	Caution Label	1

TG SERIES PTO INSTALLATION - E-HYDRA SHIFT

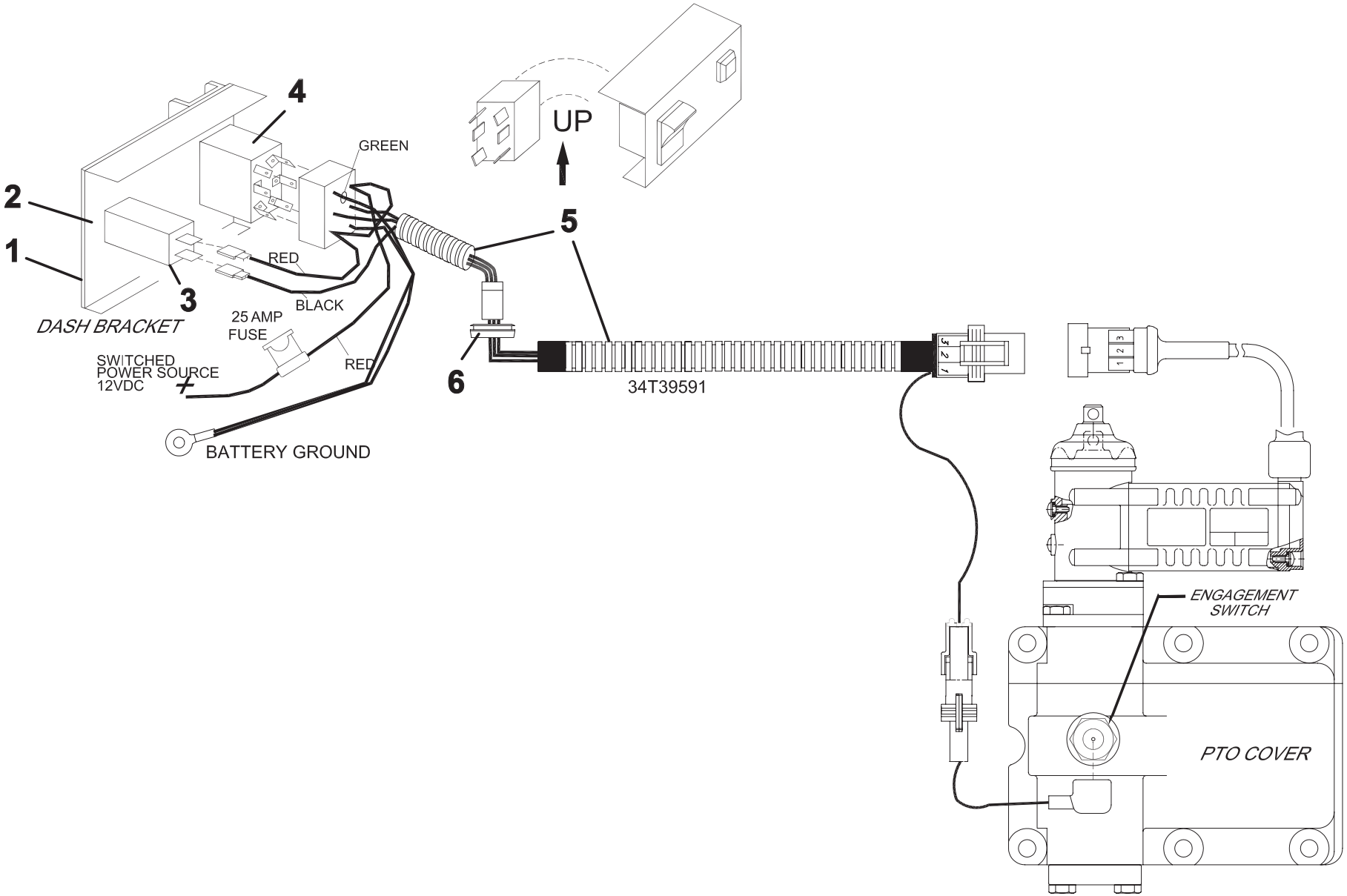

TG SERIES PTO INSTALLATION - LECTRA SHIFT

ITEM	PART NO.	DESCRIPTION	QTY
1	70050323	Face Plate	1
2	7706000005	Dash Bracket	1
3	7870000052	Switch	1
4	70050324	Light, 12VDC	1
5	9552740006	Wire Harness	1
6	9740740002	Relay	1
7	70050325	Grommet	1
8	70050326	Sheet Metal Screws	1
9	70050327	Wire Tie	5
10	70050319	Bolt Kit	1
11	9330740004	Dash Label	1

TG SERIES PTO INSTALLATION - LECTRA SHIFT

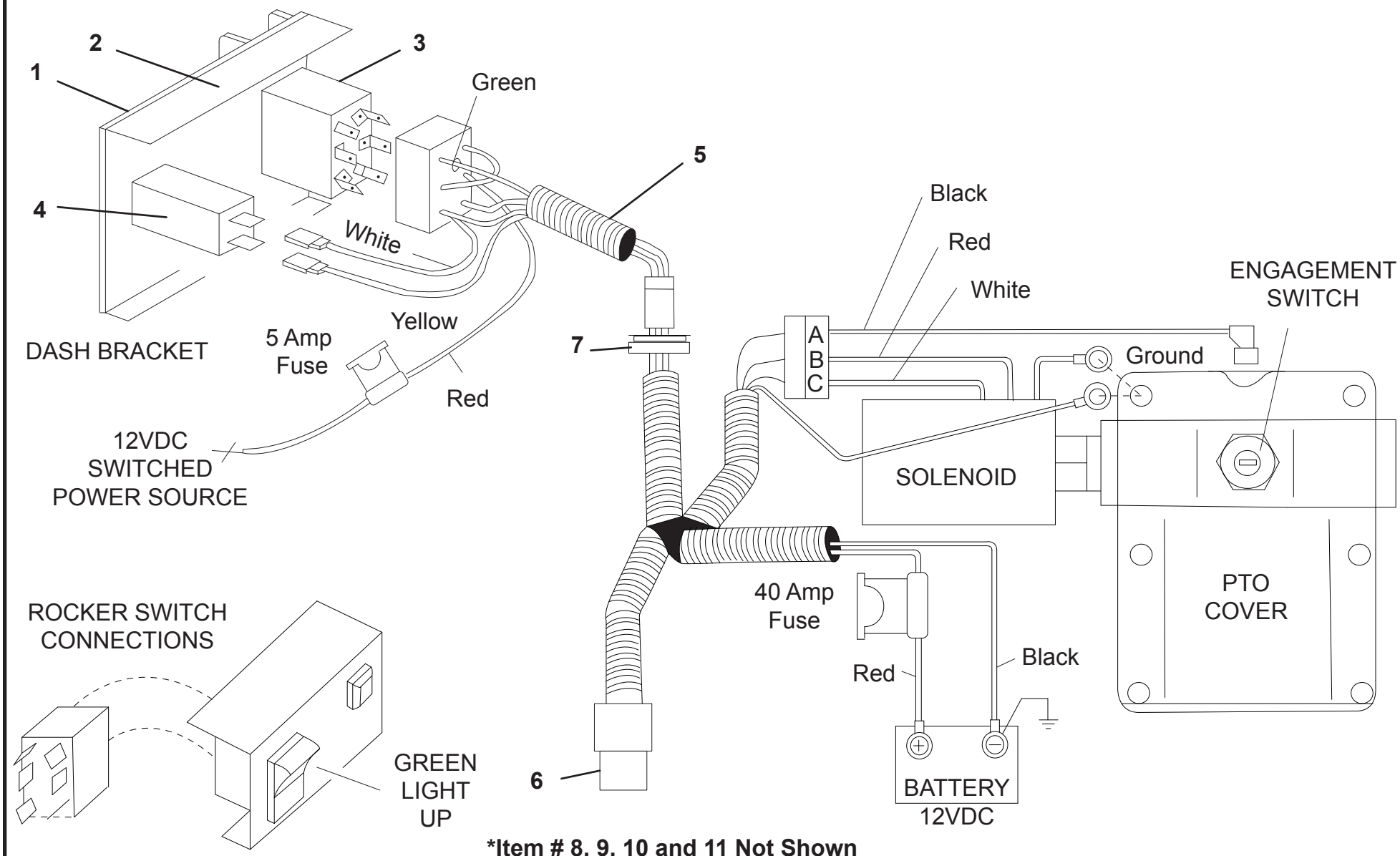

***Item # 8, 9, 10 and 11 Not Shown**

CS6/CS8 SERIES PTO INSTALLATION - ELECTRIC/AIR SHIFT

ITEM	PART NO.	DESCRIPTION	QTY
1	7706000005	Switch Bracket	1
2	7706000001	Face Plate	1
3	9443760018	Fitting, Street Tee	1
4	7870000045	Switch 12V	1
5	70050316	Fuse Assembly	1
6	9346760019	Valve, Solenoid 12V	1
7	7870000062	Pressure Switch	1
8	9935740034	Valve, Pressure Protection	1
9	70050308	Nipple	1
10	70050668	Wiring Pigtail	1
11	70050309	Connector, Male	2
12	70050310	Connector, Male	2
13	70050669	Plug, Pipe	1
14	70050314	Connector, Female Spade	3
15	70050313	Terminal	2
16	70050312	Wire	12
17	70050670	Switch, Pressure Safety	1
18	70050671	Fitting, Street Tee	1
19	70050672	Bushing, Reducer	1
20	7565000019	Air Tubing - 30Ft	1
21	70050674	Lube Hose Assembly	1
22	9443760009	Fitting	1
NS	70050673	Kit, Solenoid Bracket	1

CS6/CS8 SERIES PTO INSTALLATION - ELECTRIC/AIR SHIFT

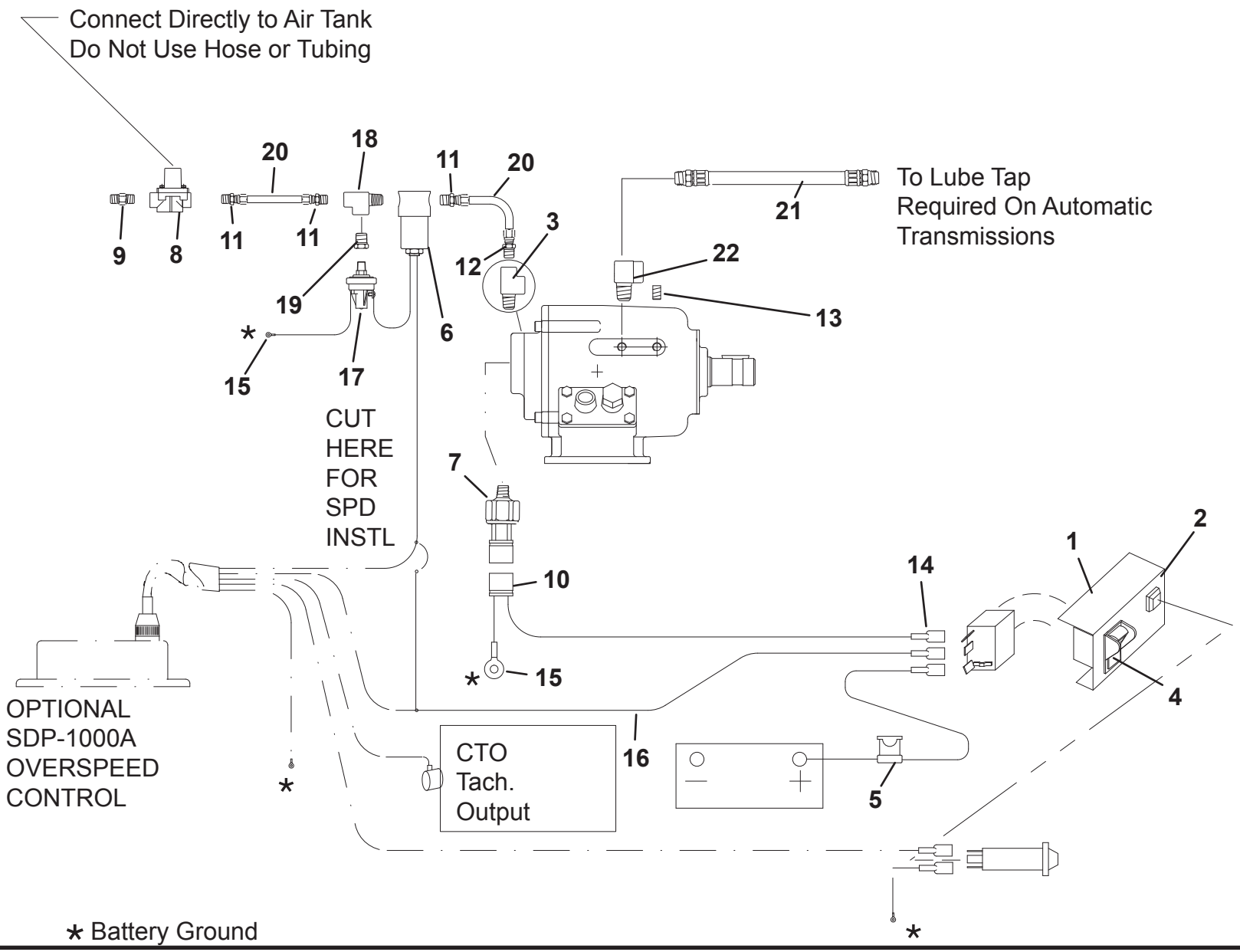

* Battery Ground

CS6/CS8 SERIES PTO INSTALLATION - ELECTRIC/HYDRAULIC SHIFT

ITEM	PART NO.	DESCRIPTION	QTY
1	7706000005	Switch Bracket	1
2	7706000001	Face Plate	1
3	7870000045	Switch 12V	1
4	70050316	Fuse Assembly	1
5	70050723	Valve, Solenoid 12V	1
6	7870000062	Pressure Switch	1
7	70050668	Wiring Pigtail	1
8	70050314	Connector, Female Spade	3
9	70050313	Terminal	2
10	70050312	Wire	12
11	70050675	Elbow	1
12	9443760018	Fitting, Street Tee	1
13	70050674	Lube Hose Assembly	1
14	9443760009	Fitting	2

CS6/CS8 SERIES PTO INSTALLATION - ELECTRIC/HYDRAULIC SHIFT

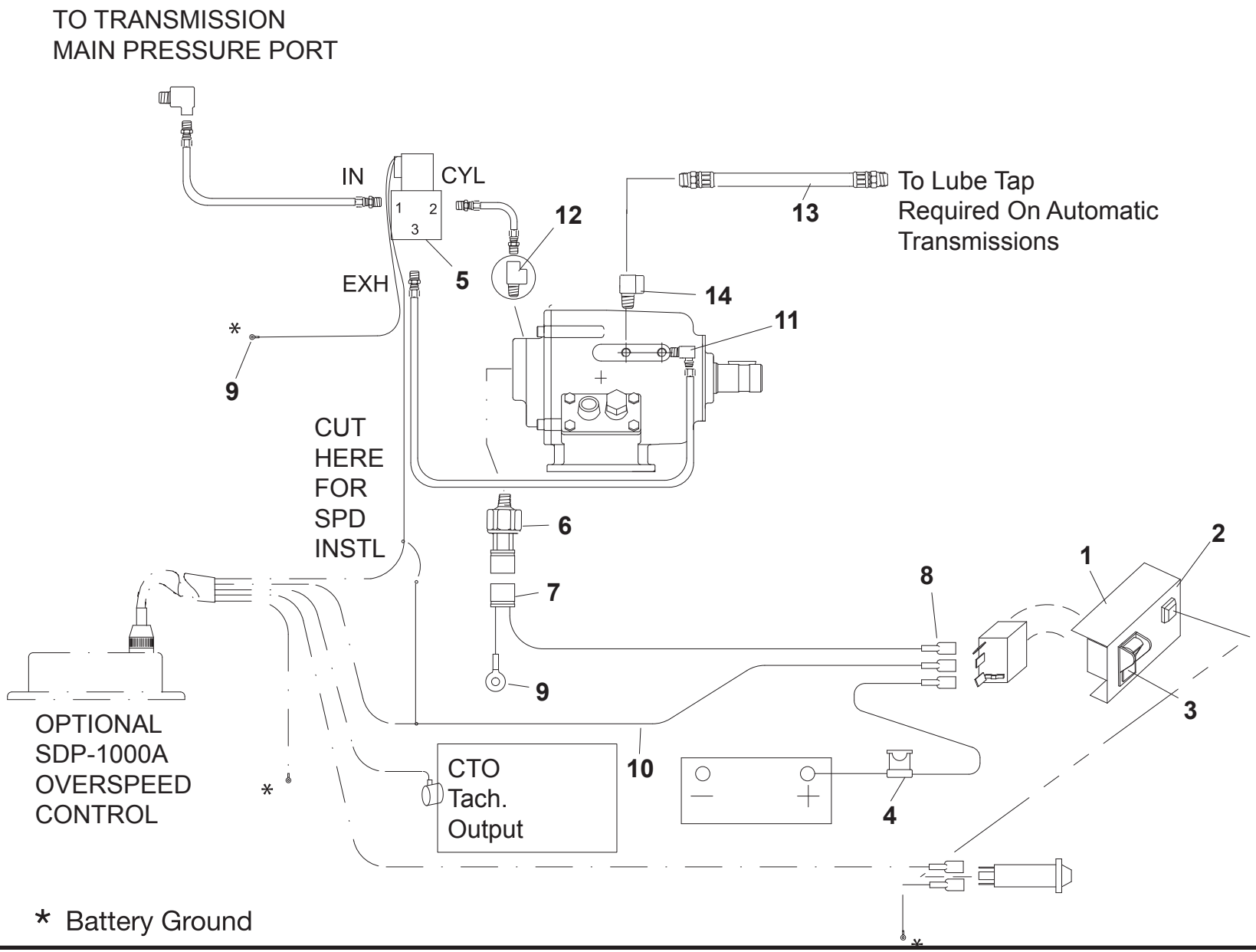

* Battery Ground

CS24 SERIES PTO INSTALLATION

ITEM	PART NO.	DESCRIPTION	QTY
1	70050316	Fuse Assembly	1
2	70050315	Butt Splice	1
3	70050312	Wire	6ft
4	70050314	Connector	1
5	70050325	Grommet	1
6	70050328	Wire Harness	1
7	7870000062	Pressure Switch	1
8	70050329	Elbow	1
9	70050330	Nipple	1
10	70050313	Terminal	2
11	70050331	Connector	3
12	7706000005	Switch Bracket	1
13	7706000001	Face Plate	1
14	7870000045	Switch, 12V	1
15	70050319	Bolt Kit	1
16	7443000431*	Fitting	1
17	7443000244*	Fitting	1
18	70050468*	Hose	1

* Also available as Hose Kit - 70050467

CS24 SERIES PTO INSTALLATION

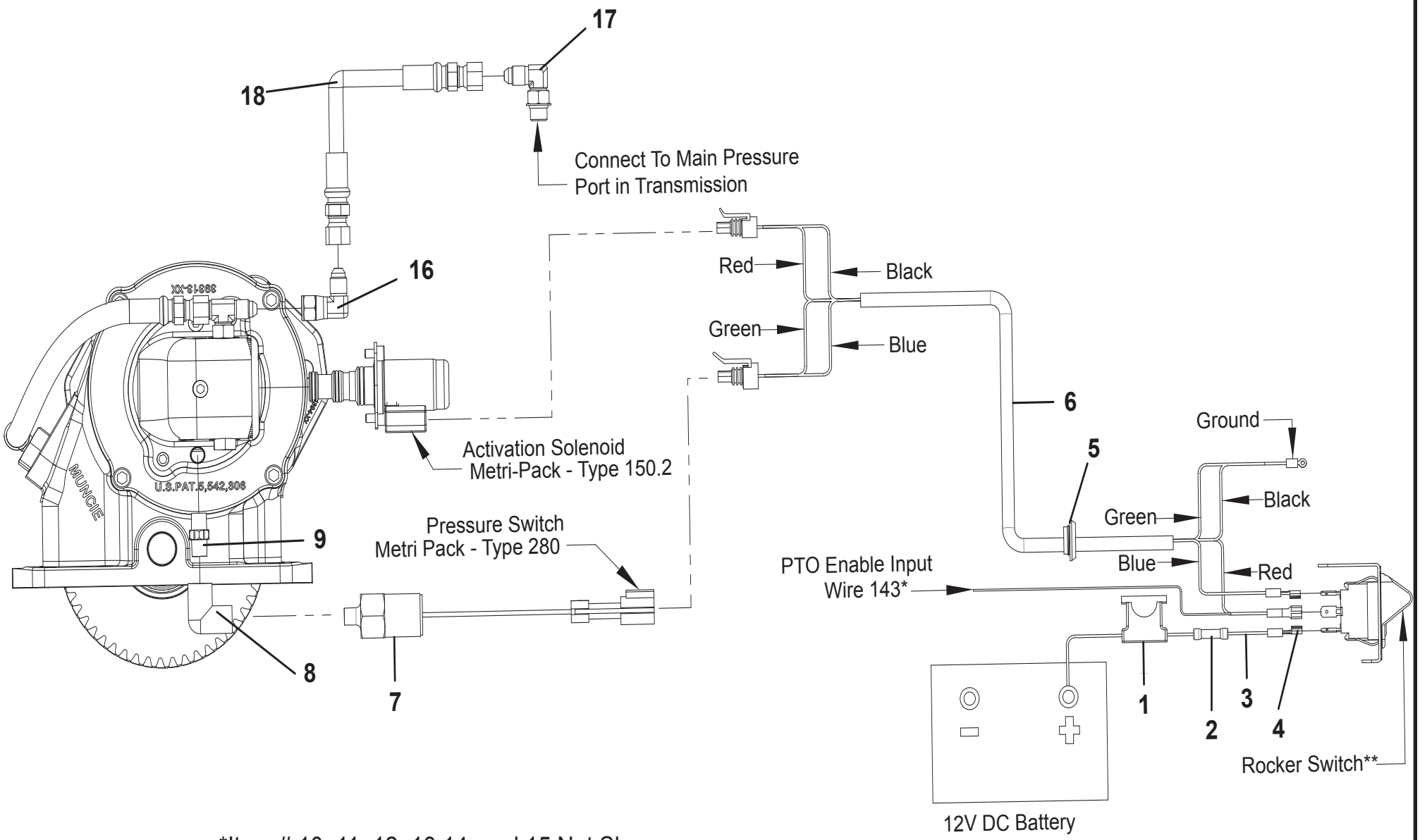

*Item # 10, 11, 12, 13 14, and 15 Not Shown

VALVE ASSEMBLY - 3935000111

ITEM	PART NO.	DESCRIPTION	QTY
1	7935000369	Valve, Inlet	1
2	7935000170	Valve, Single Clevis	3
3	7935000173	Valve, End	1
4	7577000215	Kit, Bolt/Tierod	1
5	7935000174	Valve, Relief - 2500 PSI	1
6	9843930044	Cap	A/R
7	7577000343	Kit, Cap	A/R
NS	9577930187	Kit, Spool Seal	A/R

VALVE ASSEMBLY - 3935000111

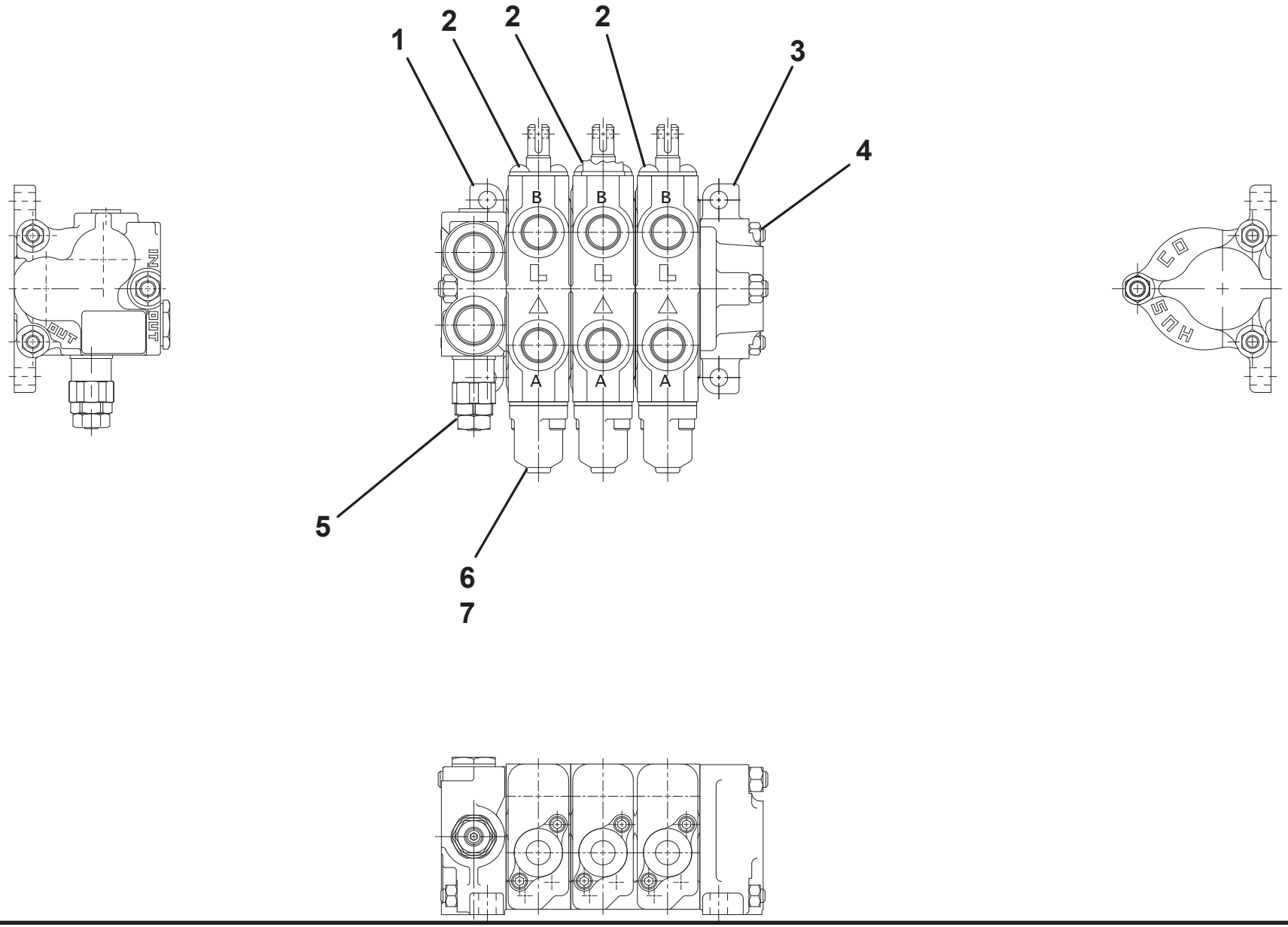

VALVE ASSEMBLY - 3935000115

ITEM	PART NO.	DESCRIPTION	QTY
1	7935000369	Valve, Inlet	1
2	7935000170	Valve, Single Clevis	2
3	7935000227	Valve w/ Relief	1
4	7935000173	Valve, End	1
5	7577000215	Kit, Bolt/Tierod	1
6	7935000388	Valve, Relief - 2000 PSI	1
7	7935000174	Valve, Relief - 2500 PSI	1
8	9843930044	Cap	A/R
9	7577000343	Kit, Cap	A/R
NS	9577930187	Kit, Spool Seal	A/R

VALVE ASSEMBLY - 3935000115

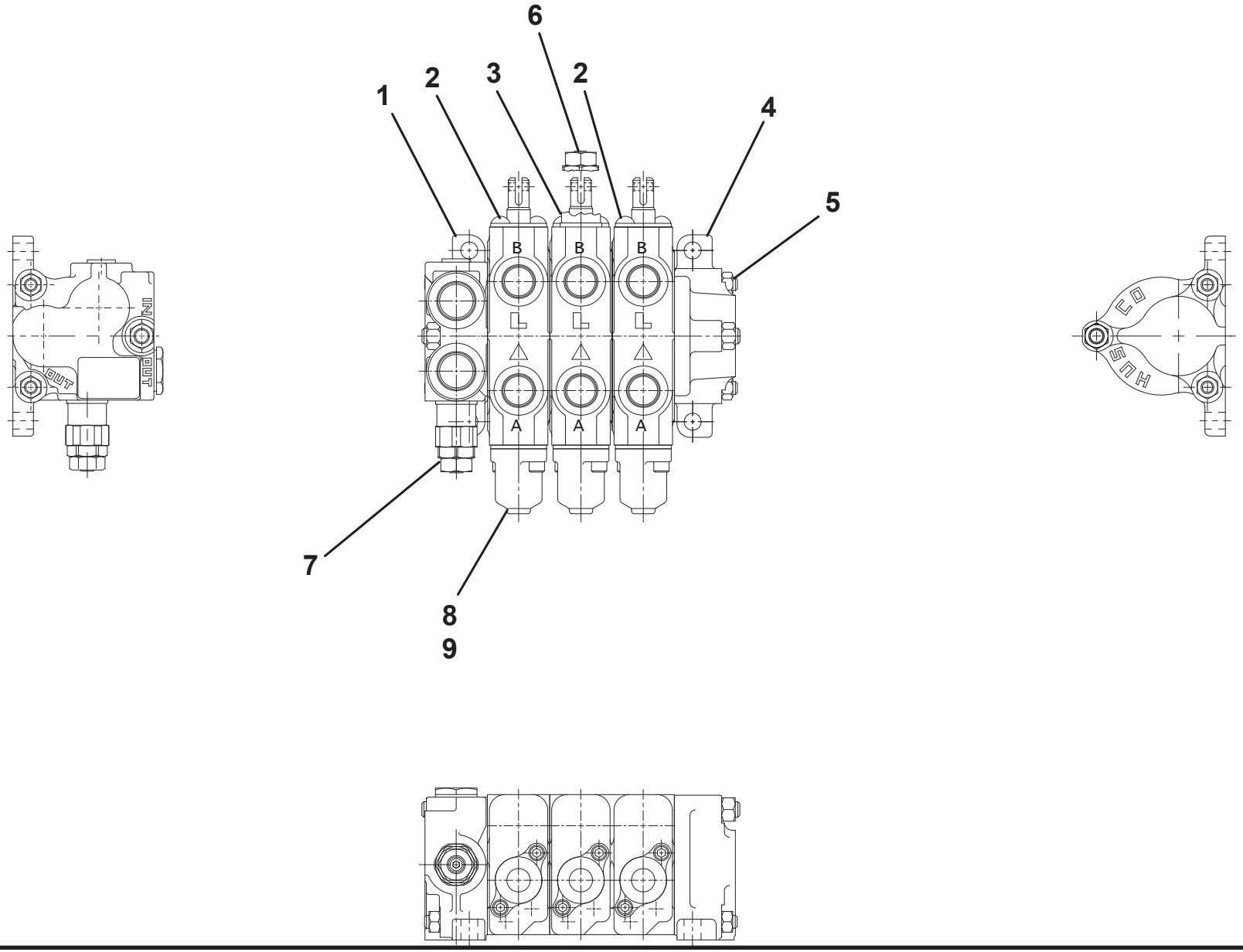

VALVE ASSEMBLY - 3935000116

ITEM	PART NO.	DESCRIPTION	QTY
1	7935000369	Valve, Inlet	1
2	7935000170	Valve, Single Clevis	3
3	7935000227	Valve w/ Relief	1
4	7935000173	Valve, End	1
5	7577000216	Kit, Bolt/Tierod	1
6	7935000388	Valve, Relief - 2000 PSI	1
7	7935000174	Valve, Relief - 2500 PSI	1
8	9843930044	Cap	A/R
9	7577000343	Kit, Cap	A/R
NS	9577930187	Kit, Spool Seal	A/R

VALVE ASSEMBLY - 3935000116

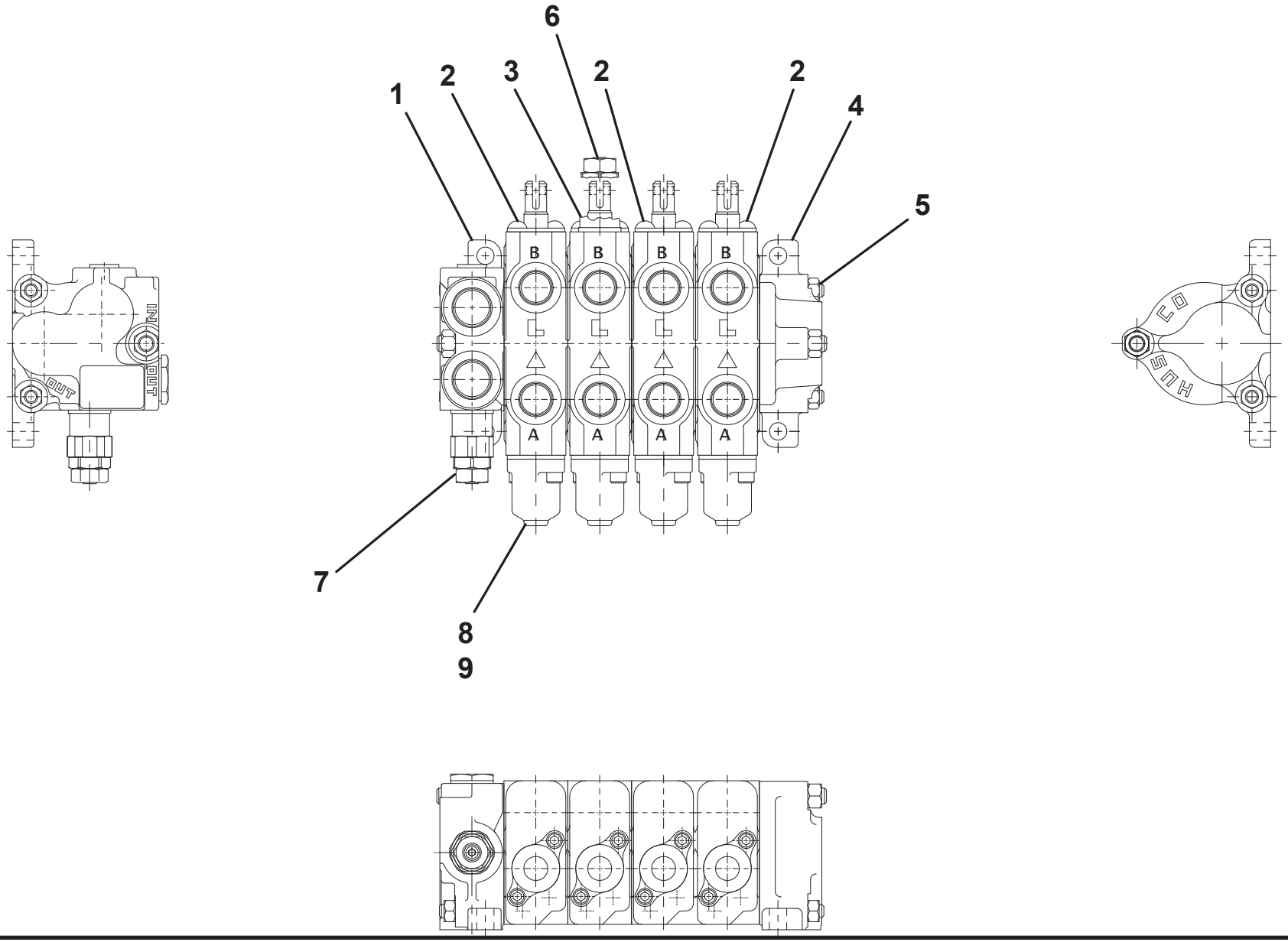

VALVE ASSEMBLY - 3935000117

ITEM	PART NO.	DESCRIPTION	QTY
1	7935000369	Valve, Inlet	1
2	7935000170	Valve, Single Clevis	4
3	7935000227	Valve w/ Relief	1
4	7935000173	Valve, End	1
5	7577000217	Kit, Bolt/Tierod	1
6	7935000388	Valve, Relief - 2000 PSI	1
7	7935000174	Valve, Relief - 2500 PSI	1
8	9843930044	Cap	A/R
9	7577000343	Kit, Cap	A/R
NS	9577930187	Kit, Spool Seal	A/R

VALVE ASSEMBLY - 3935000117

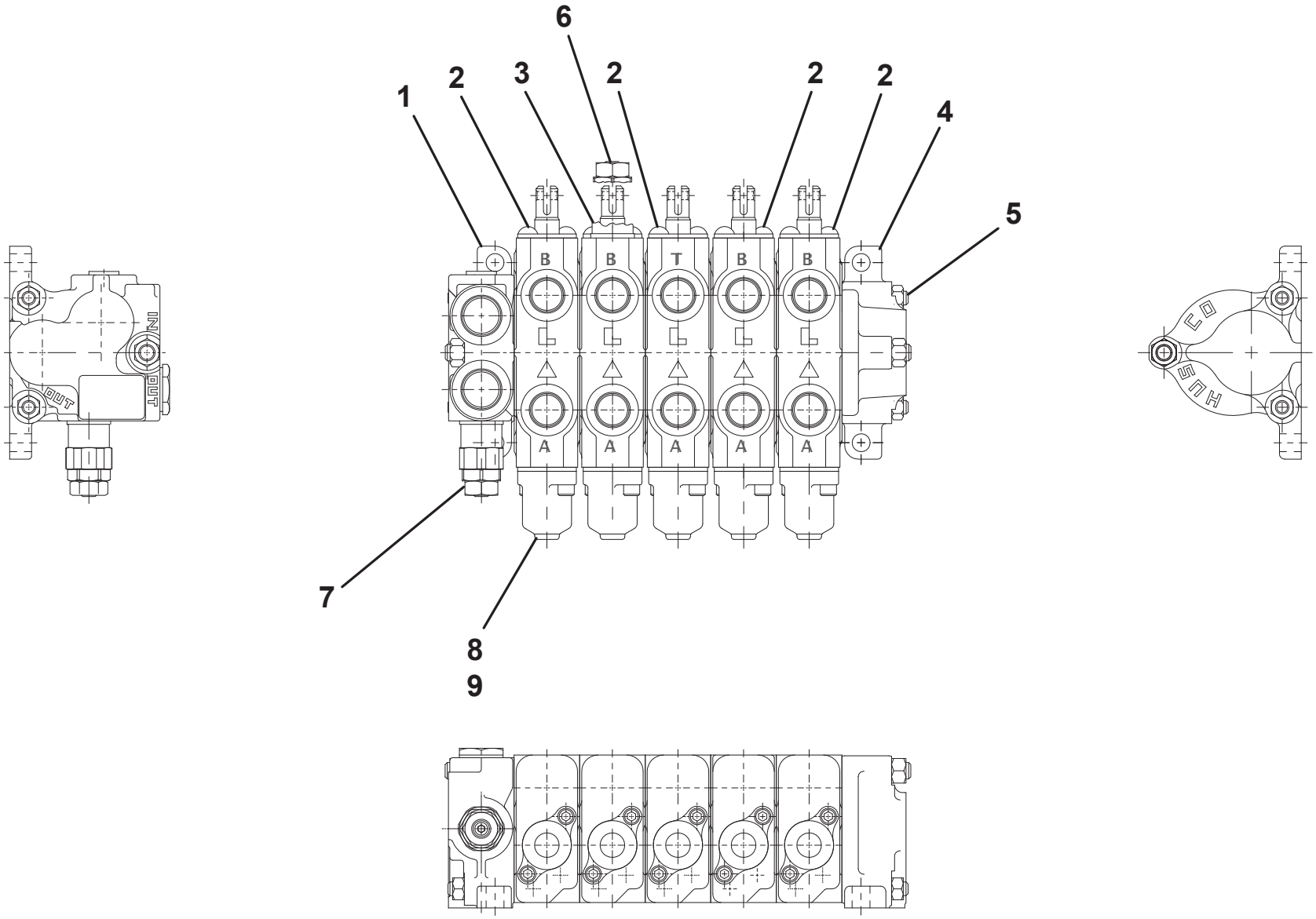

VALVE ASSEMBLY - 3935000118

ITEM	PART NO.	DESCRIPTION	QTY
1	7935000369	Valve, Inlet	1
2	7935000170	Valve, Single Clevis	4
3	7935000227	Valve w/ Relief	1
4	7935000173	Valve, End	1
5	7577000218	Kit, Bolt/Tierod	1
6	7935000171	Valve w/ Counterbalance	1
7	7935000388	Valve, Relief - 2000 PSI	1
8	7935000174	Valve, Relief - 2500 PSI	1
9	9843930044	Cap	A/R
10	7577000343	Kit, Cap	A/R
NS	9577930187	Kit, Spool Seal	A/R

VALVE ASSEMBLY - 3935000118

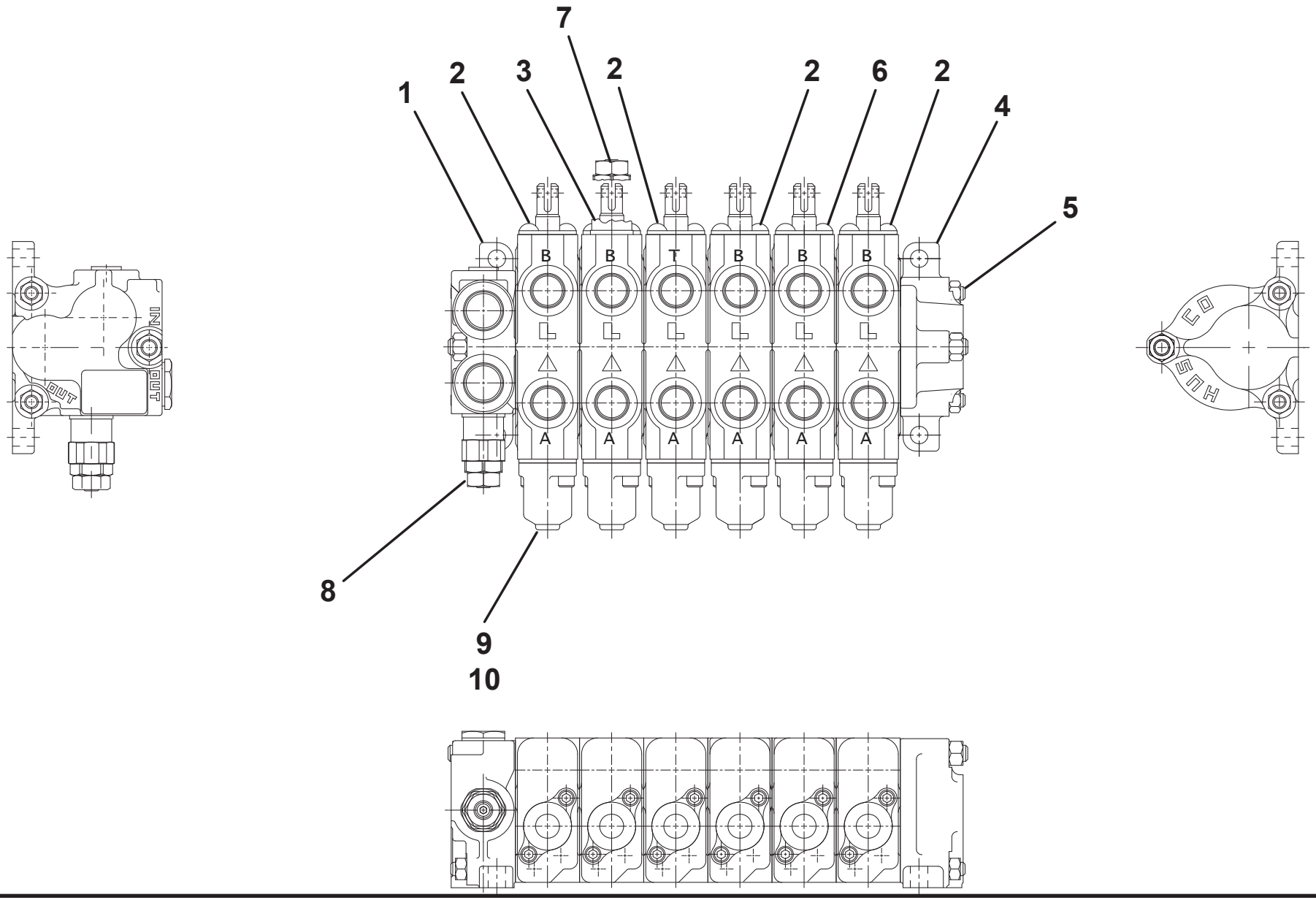

VALVE ASSEMBLY - 3935000150

ITEM	PART NO.	DESCRIPTION	QTY
1	7935000369	Valve, Inlet	1
2	7935000170	Valve, Single Clevis	4
3	7935000227	Valve w/ Relief	1
4	7935000173	Valve, End	1
5	7577000238	Kit, Bolt/Tierod	1
6	7935000171	Valve w/ Counterbalance	1
7	7395000265	Valve w/ PO Check	1
8	7935000388	Valve, Relief - 2000 PSI	1
9	7935000174	Valve, Relief - 2500 PSI	1
10	9843930044	Cap	A/R
11	7577000343	Kit, Cap	A/R
NS	9577930187	Kit, Spool Seal	A/R

VALVE ASSEMBLY - 3935000150

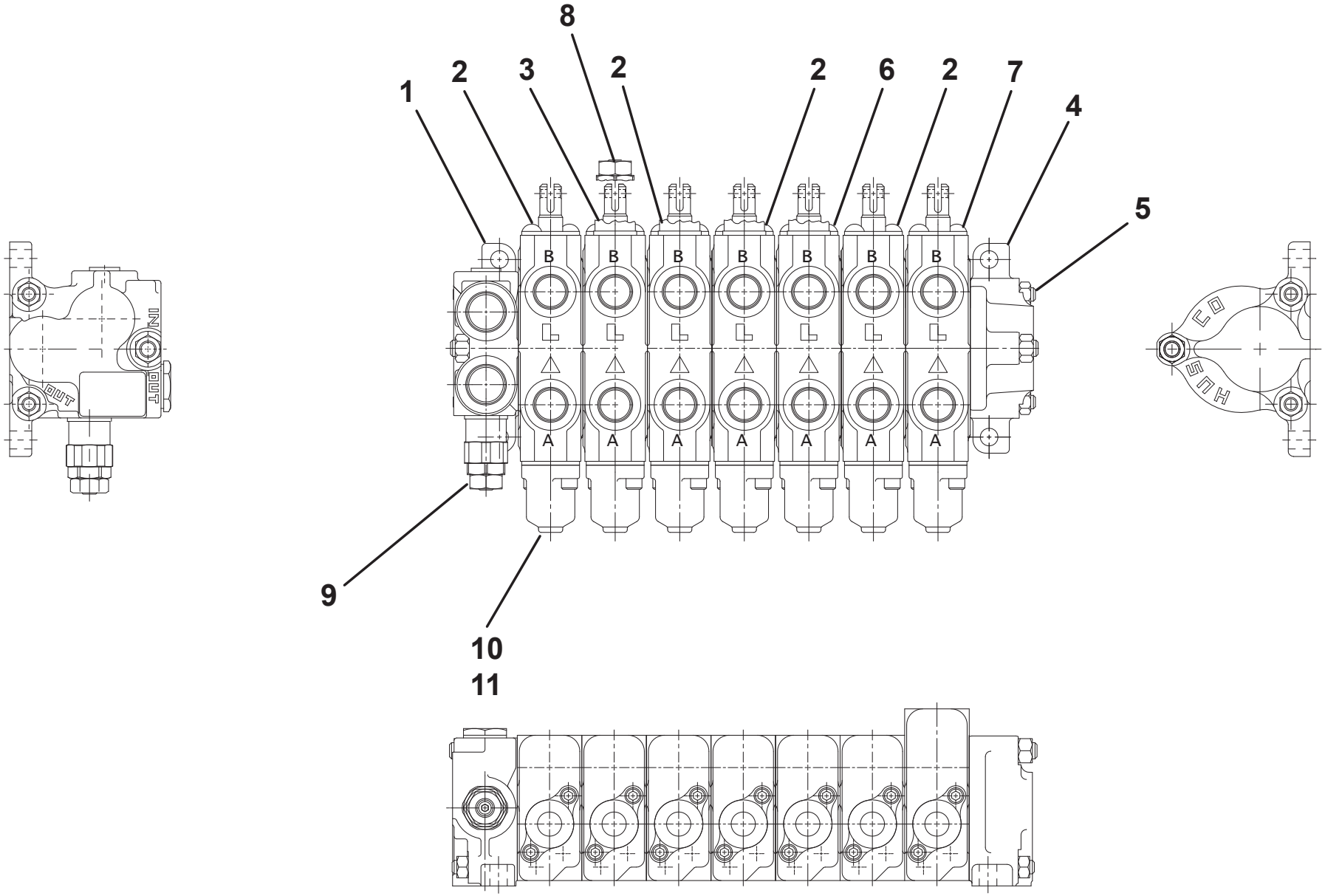

VALVE ASSEMBLY - 3935000166

ITEM	PART NO.	DESCRIPTION	QTY
1	7935000369	Valve, Inlet	1
2	7935000170	Valve, Single Clevis	4
3	7935000227	Valve w/ Relief	1
4	7935000173	Valve, End	1
5	7577000218	Kit, Bolt/Tierod	1
6	7395000265	Valve w/ PO Check	1
7	7935000388	Valve, Relief - 2000 PSI	1
8	7935000174	Valve, Relief - 2500 PSI	1
9	9843930044	Cap	A/R
10	7577000343	Kit, Cap	A/R
NS	9577930187	Kit, Spool Seal	A/R

VALVE ASSEMBLY - 3935000166

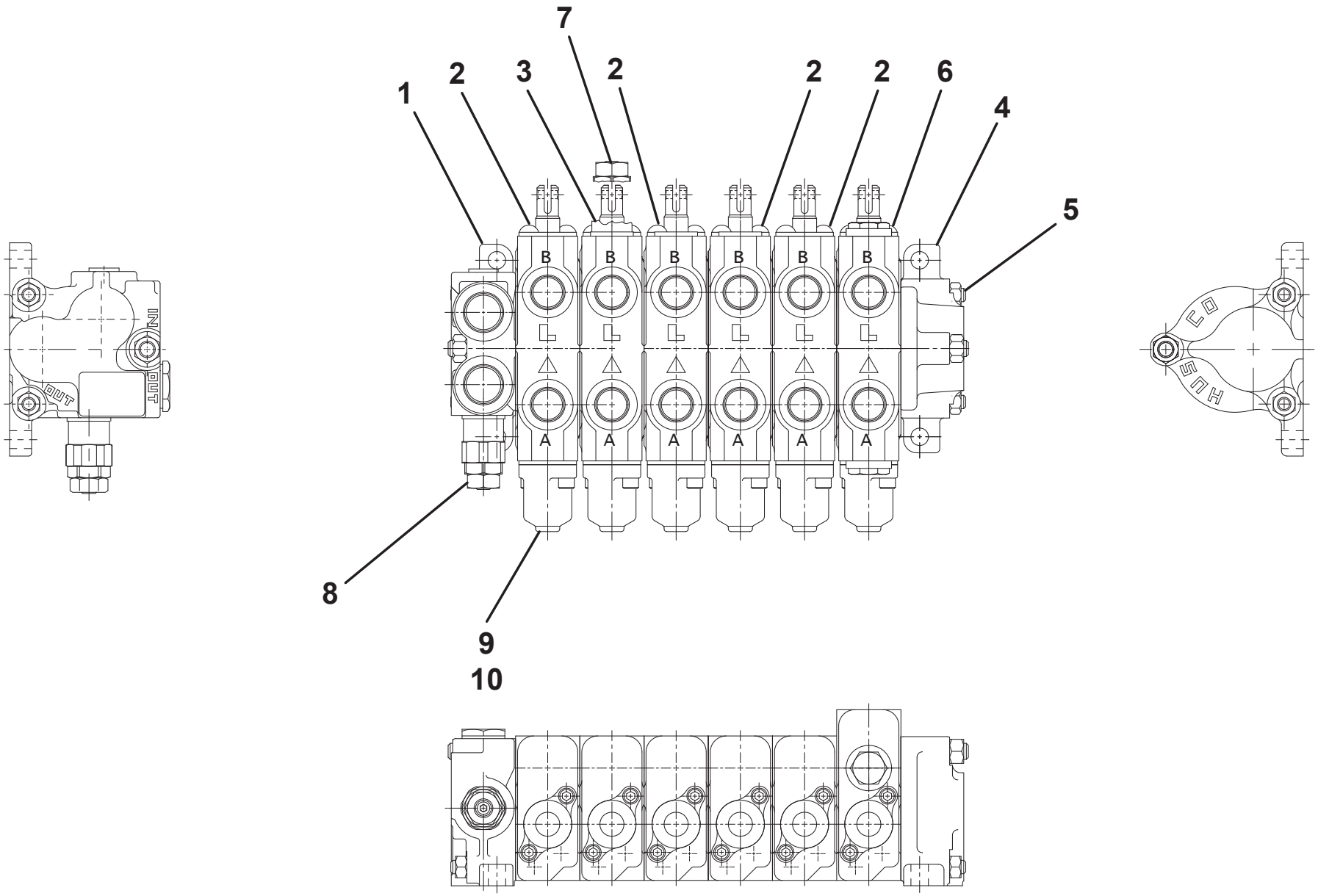

VALVE ASSEMBLY - 1001145986

ITEM	PART NO.	DESCRIPTION	QTY
1	7935000369	Valve, Inlet	1
2	7935000170	Valve, Single Clevis	2
3	7935000227	Valve w/ Relief	1
4	7935000173	Valve, End	1
5	7577000216	Kit, Bolt/Tierod	1
6	7935000388	Valve, Relief - 2000 PSI	1
7	7935000174	Valve, Relief - 2500 PSI	1
8	1001133740	Valve, Single Clevis, Motor Spool	1
9	9843930044	Cap	A/R
10	7577000343	Kit, Cap	A/R
NS	9577930187	Kit, Spool Seal	A/R

VALVE ASSEMBLY - 1001145986

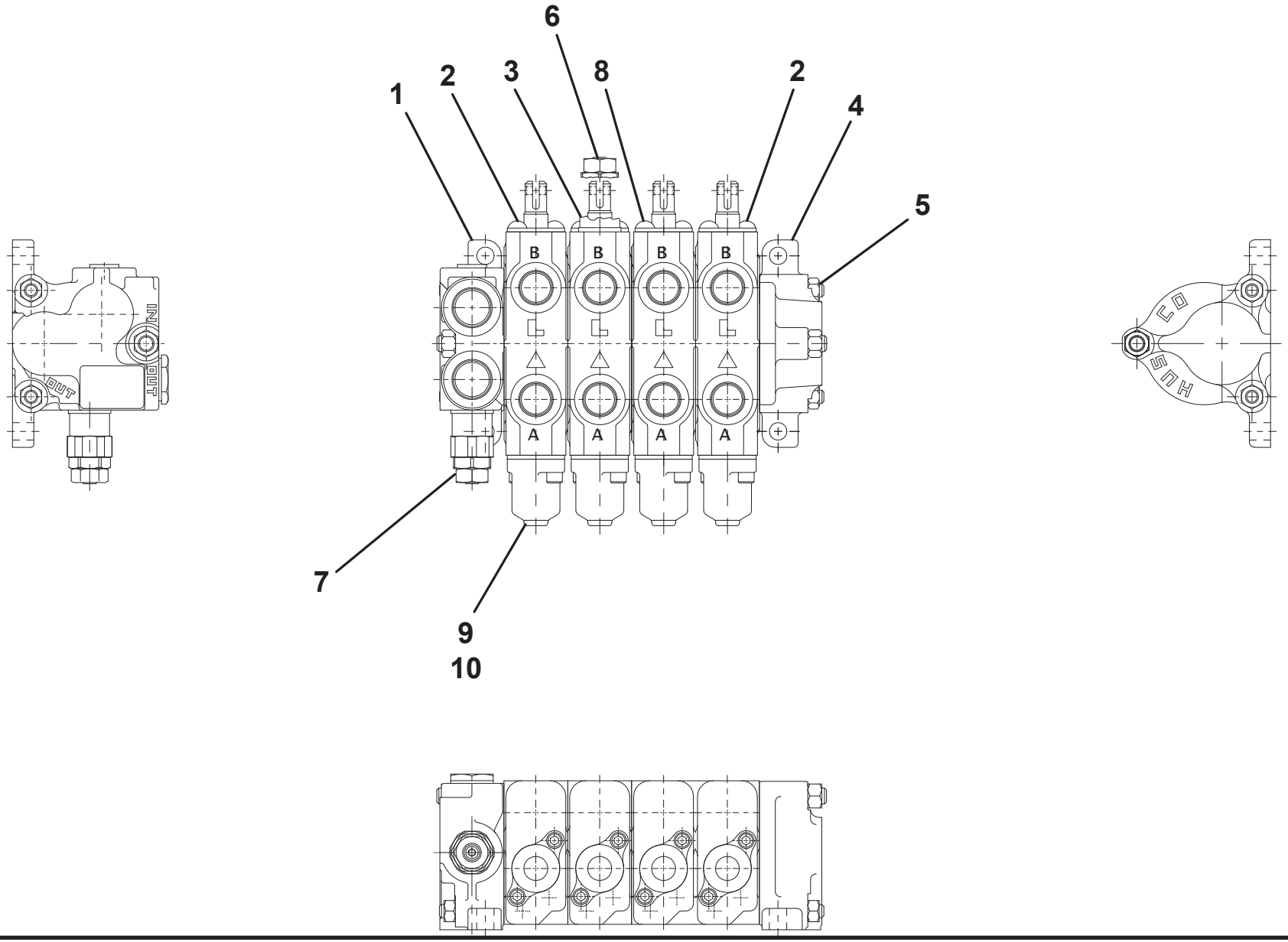

VALVE ASSEMBLY - 1001146603

ITEM	PART NO.	DESCRIPTION	QTY
1	7935000369	Valve, Inlet	1
2	7935000170	Valve, Single Clevis	3
3	7935000227	Valve w/ Relief	1
4	7935000173	Valve, End	1
5	7577000217	Kit, Bolt/Tierod	1
6	7935000388	Valve, Relief - 2000 PSI	1
7	7935000174	Valve, Relief - 2500 PSI	1
8	1001133740	Valve, Single Clevis, Motor Spool	1
9	9843930044	Cap	A/R
10	7577000343	Kit, Cap	A/R
NS	9577930187	Kit, Spool Seal	A/R

VALVE ASSEMBLY - 1001146603

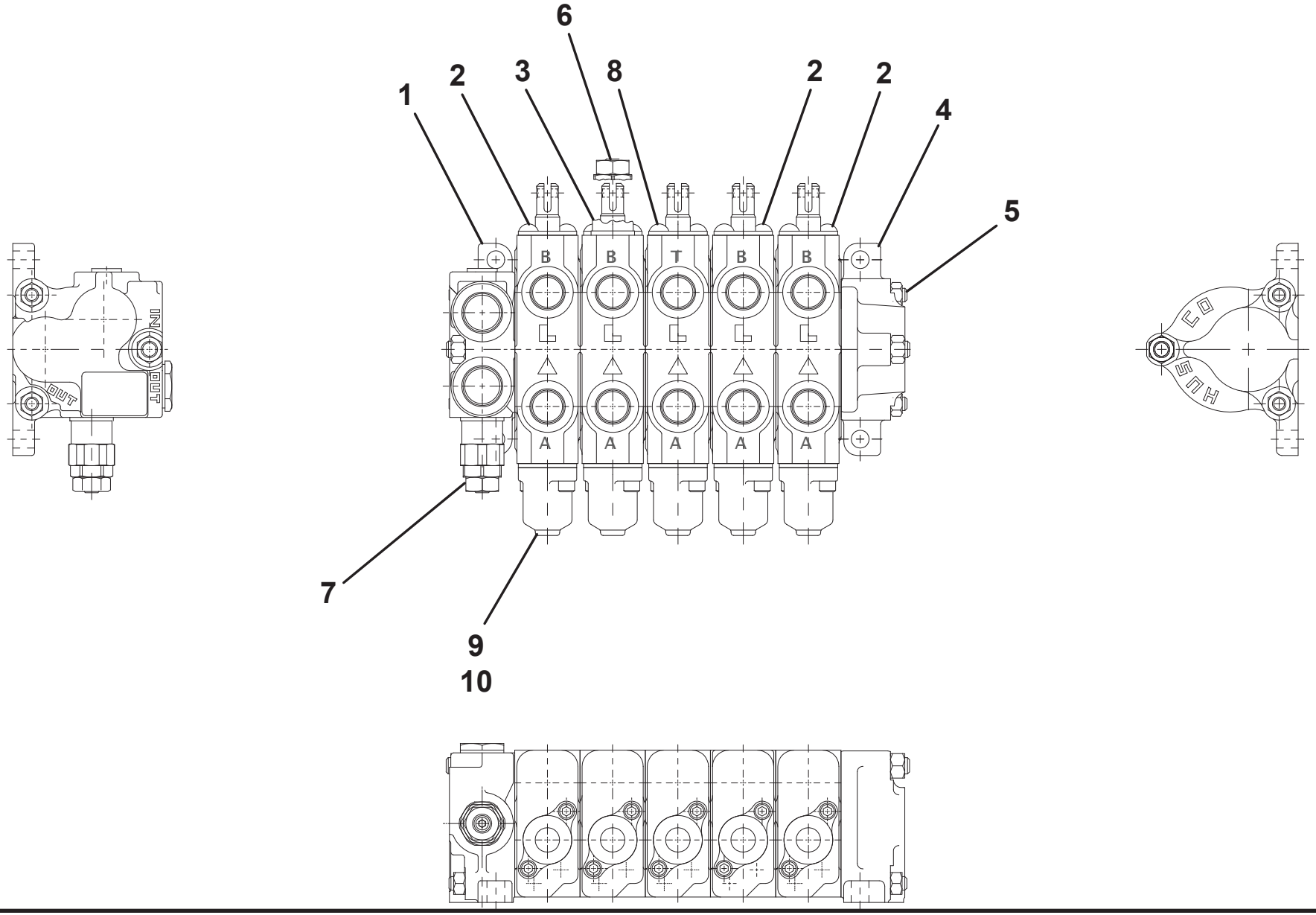

ACCESSORY EQUIPMENT

ITEM	PART NO.	DESCRIPTION	QTY
1	7002000449	Magnetic Tow Lights	1
2	7002000404	Fire Extinguisher	1
3	7002000448	Wheel Chock	1
4	7002000285	Reflective Triangles	1
5	7002000451	Load Binder - 0.38” Chain	1
6	Not Required		
7	7002000521	Remote Control Transmitter Holder	1
8	7002000447	Valve Stem Extension Kit	1
9	7002000503	Air Compressor with Hose Reel	1
10	7443000155	Elbow	1
11	7115161050	Capscrew, 0.38”-16NC x 1.25”	4
12	7950150161	Flatwasher, 0.31” ID	4
13	7660162601	Locknut, 0.38”-16NC	4
14	7115181050	Capscrew, 0.50”-13NC x 1.25”	4
15	7950180153	Flatwasher, 0.50” ID	8
16	7660182601	Locknut, 0.50”-13NC	4

ACCESSORY EQUIPMENT

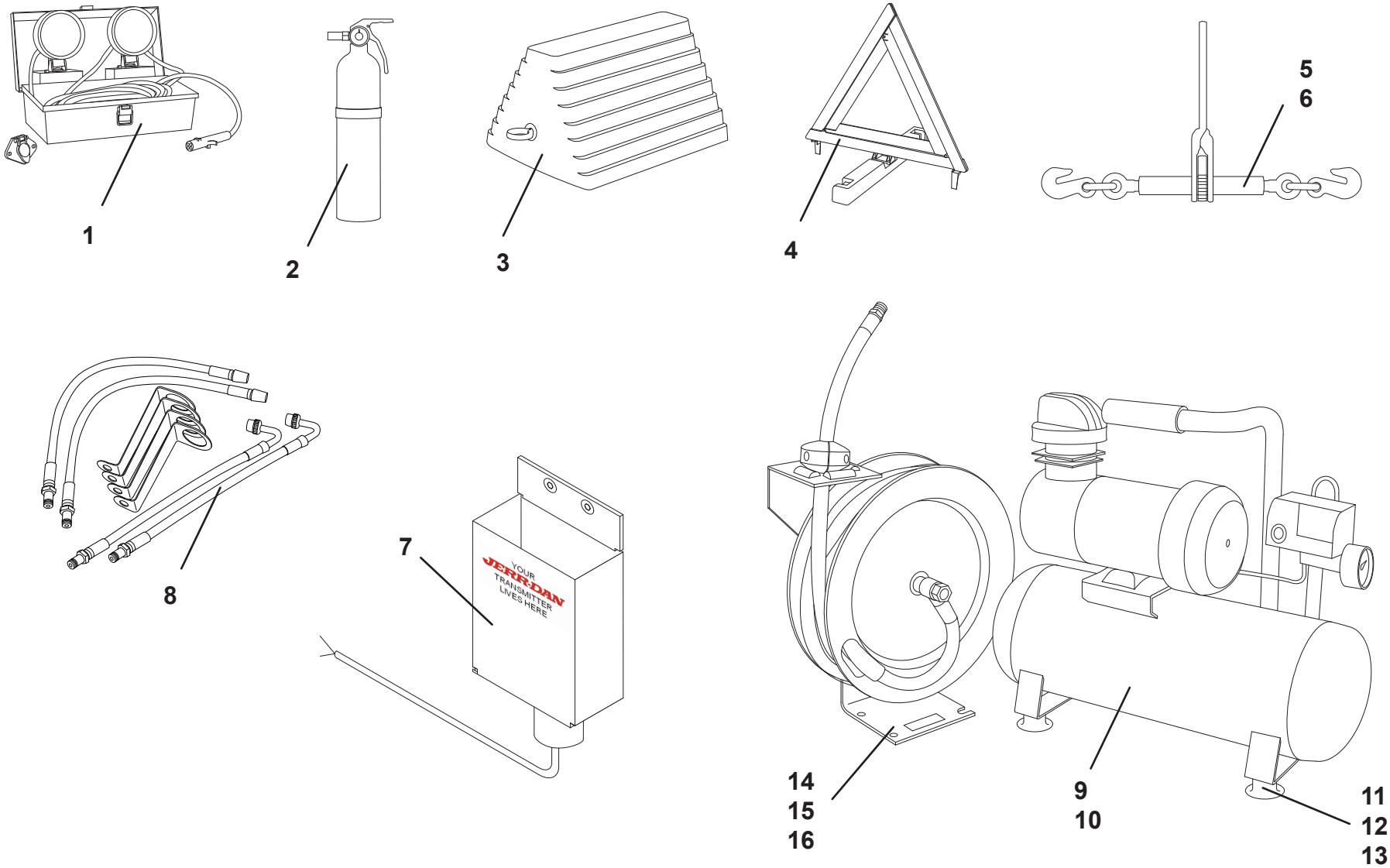

HYDRAULIC SCHEMATIC

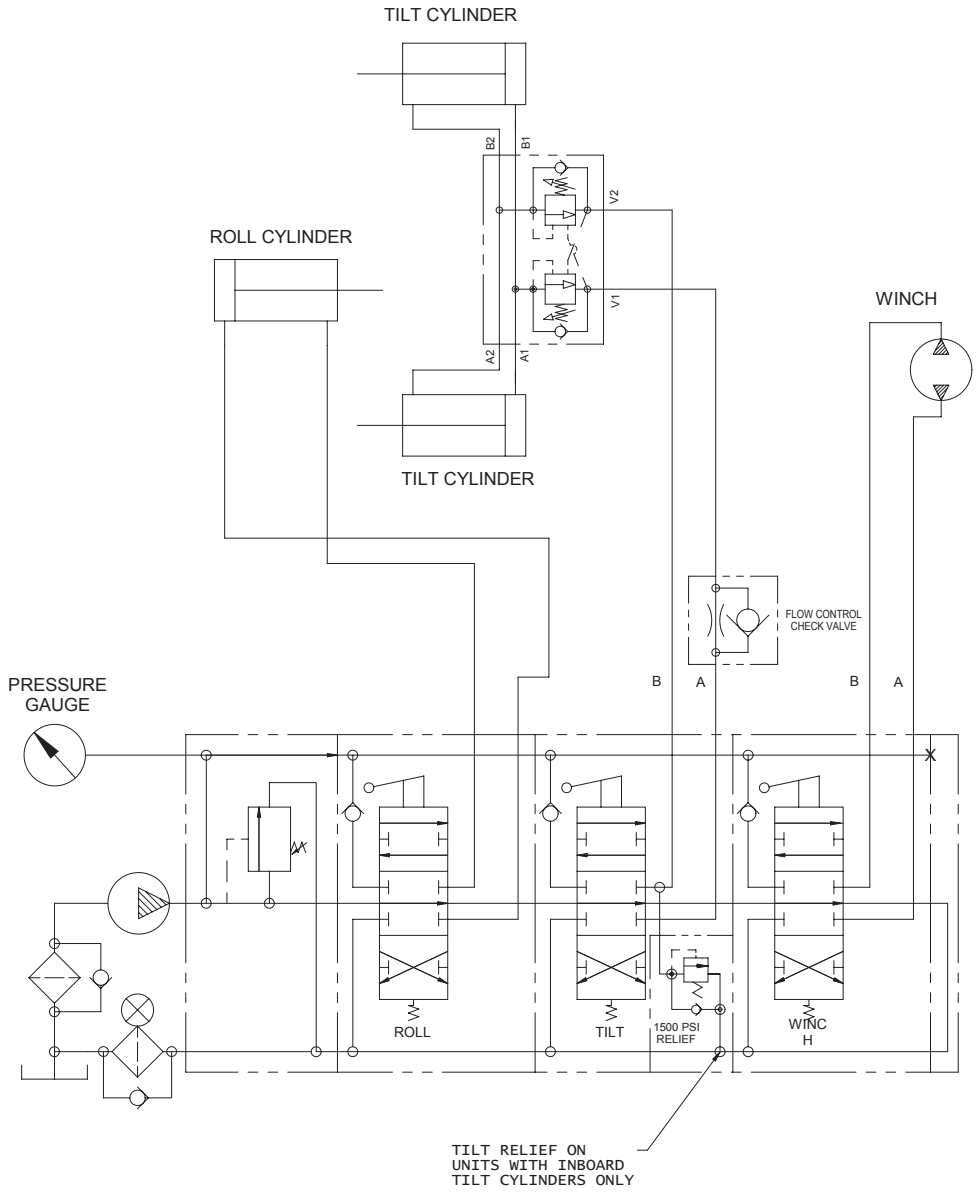

HYDRAULIC SCHEMATIC

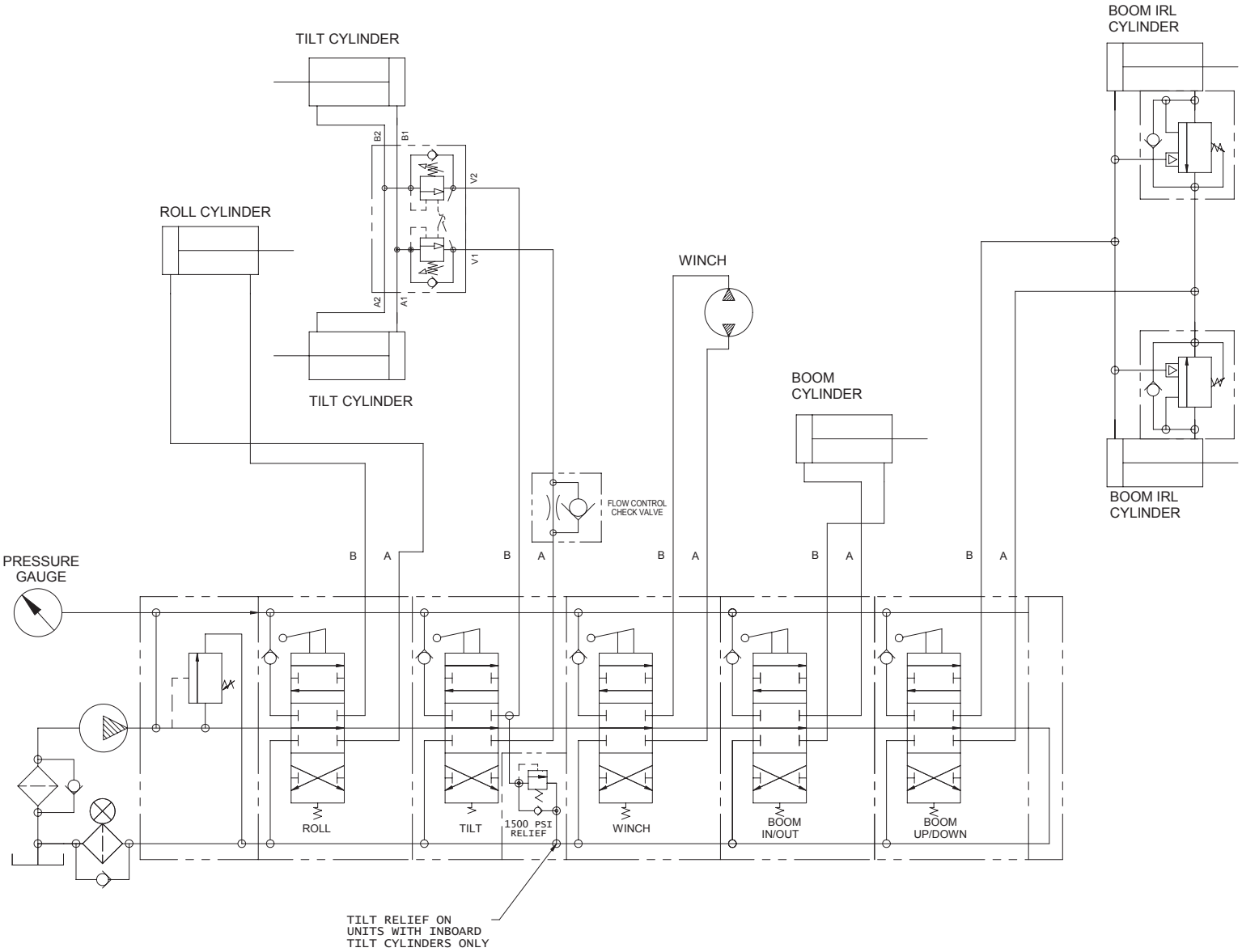

HYDRAULIC SCHEMATIC

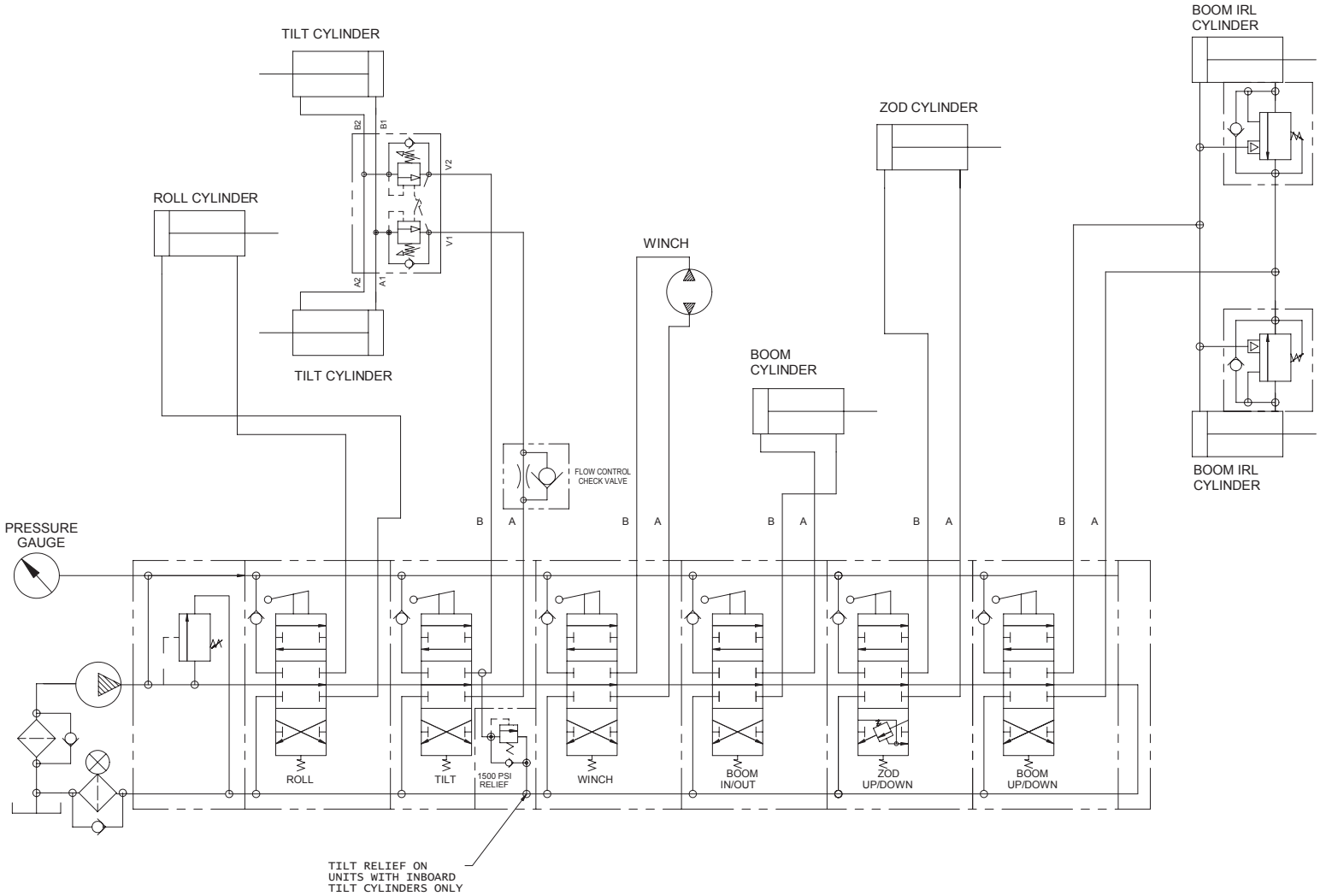

HYDRAULIC SCHEMATIC

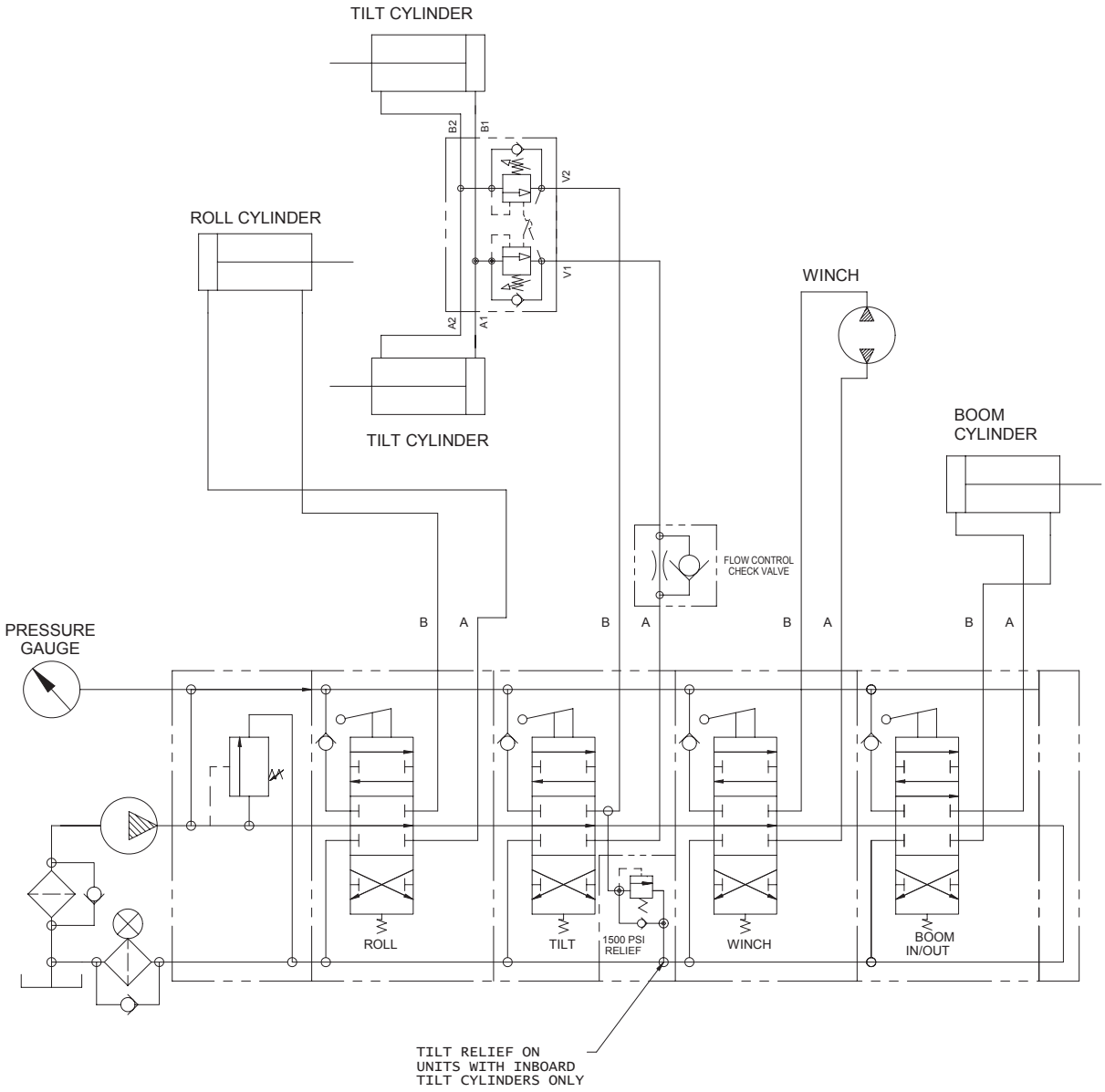

HYDRAULIC SCHEMATIC

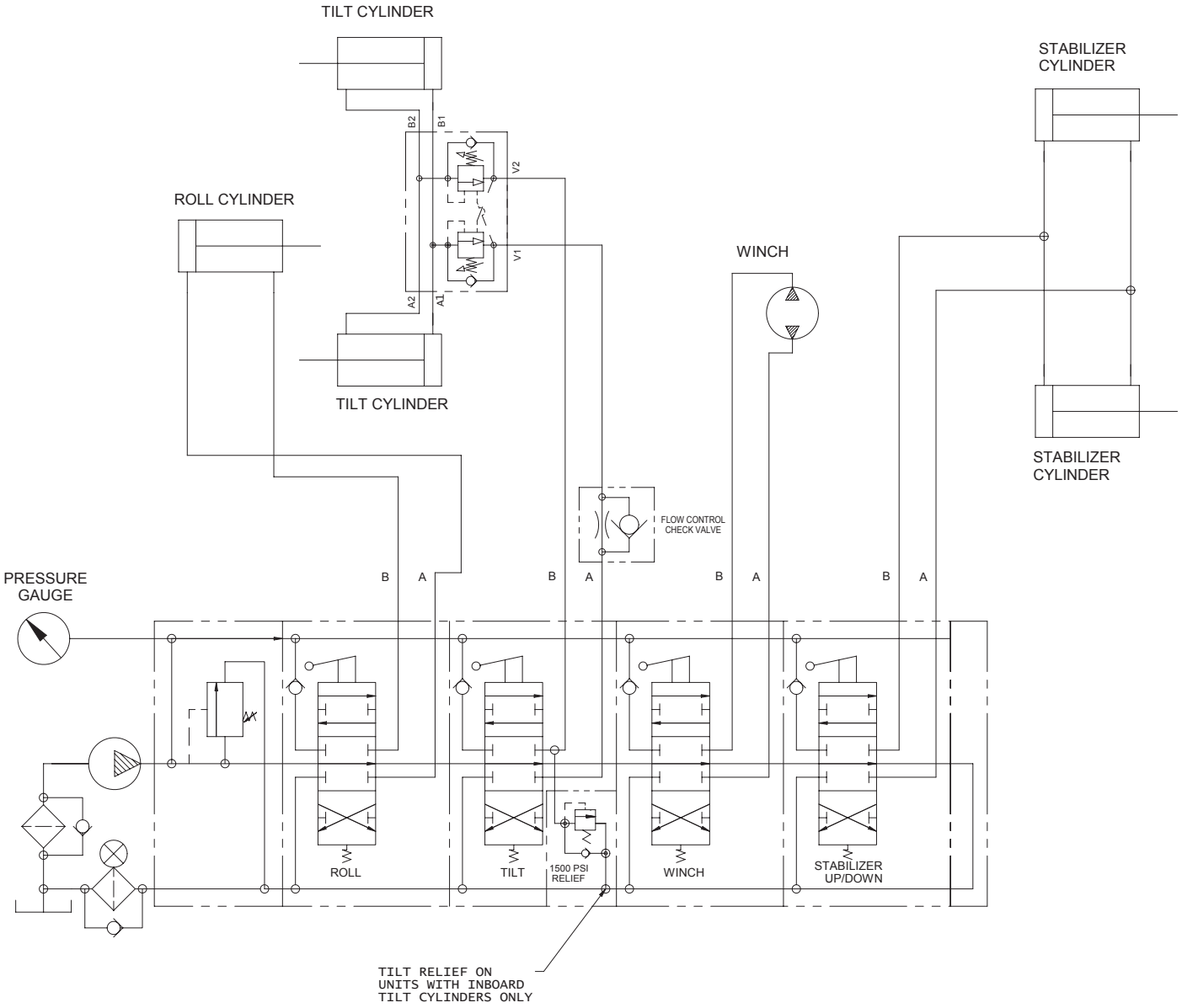

HYDRAULIC SCHEMATIC

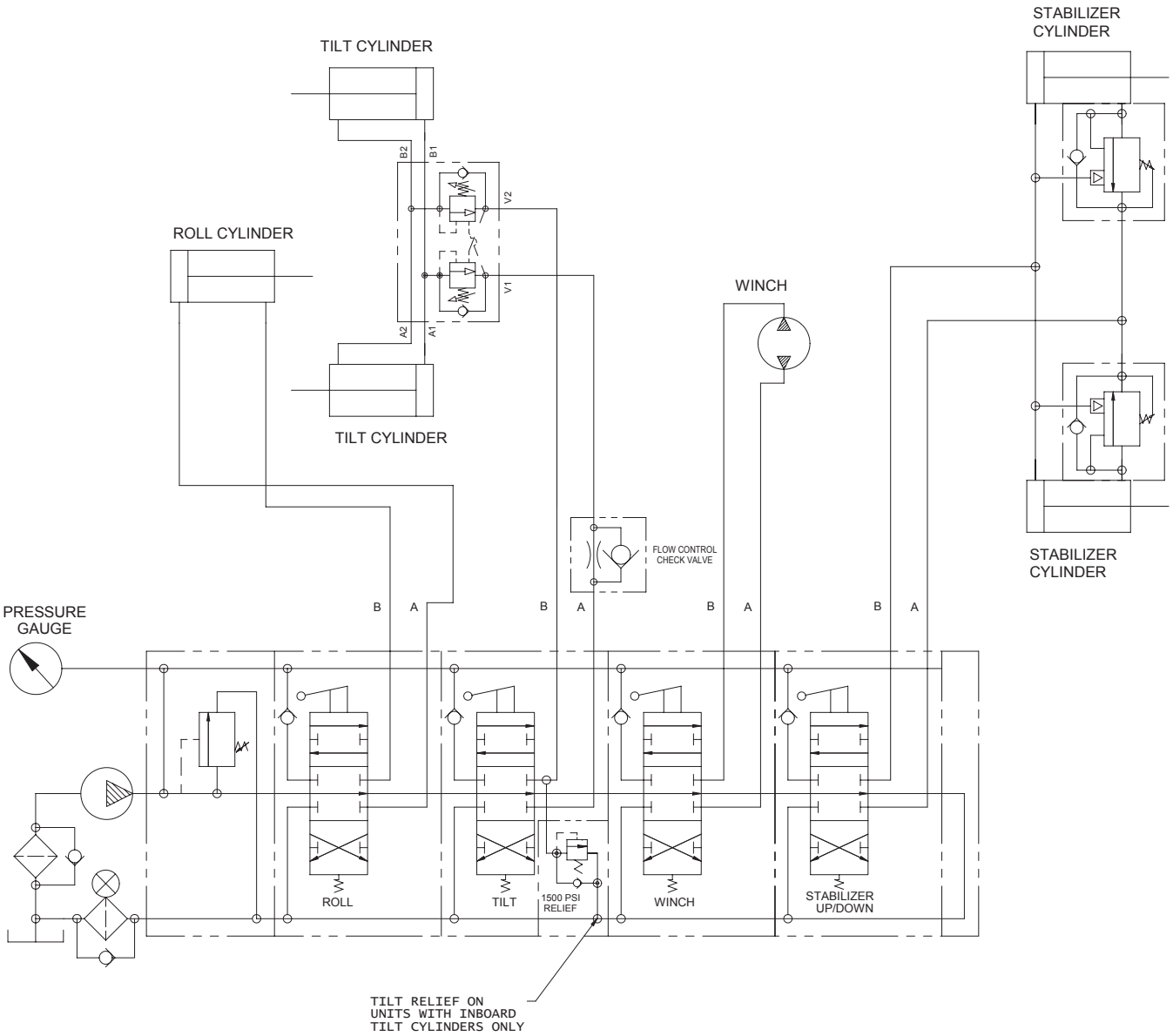

HYDRAULIC SCHEMATIC

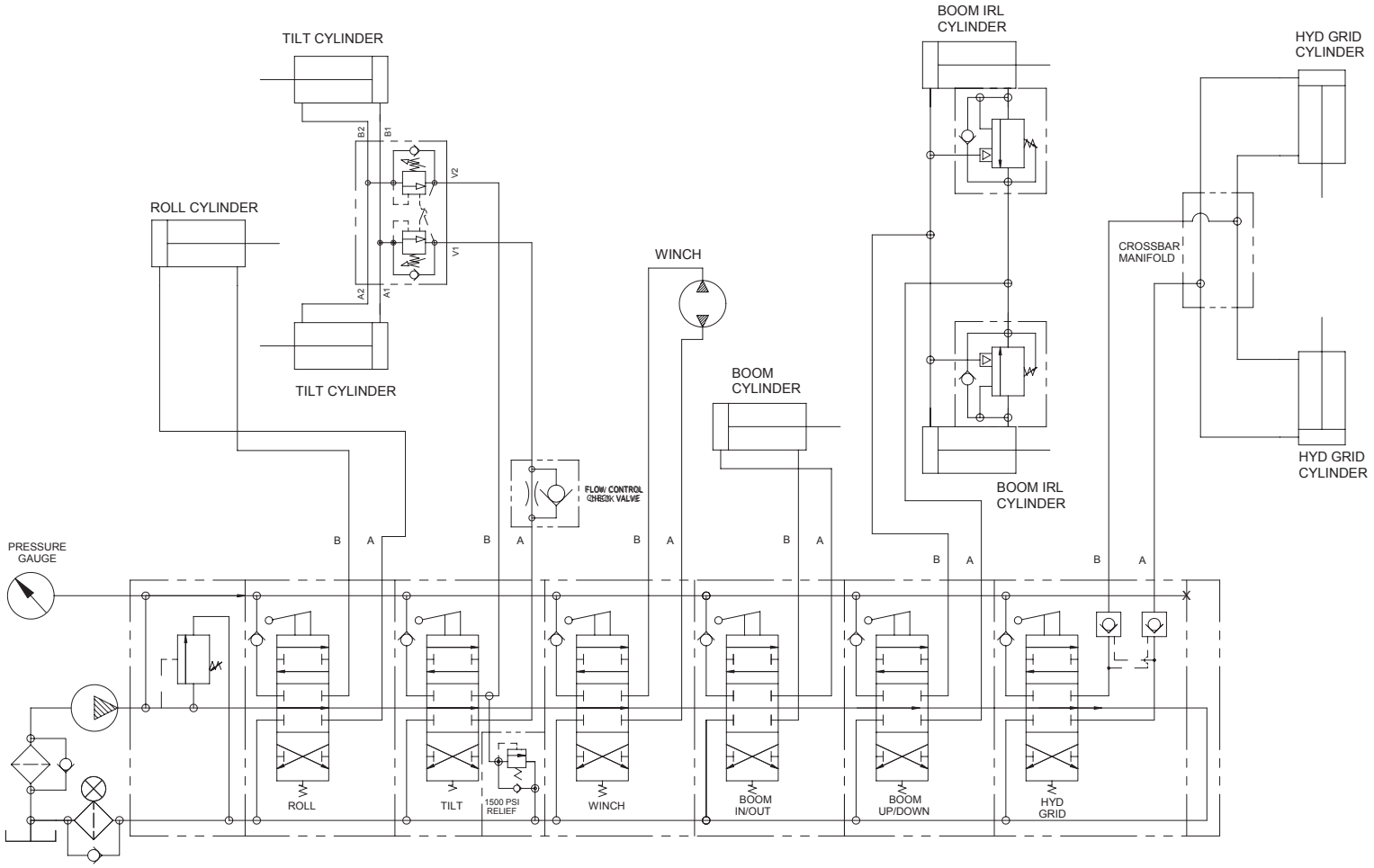

HYDRAULIC SCHEMATIC

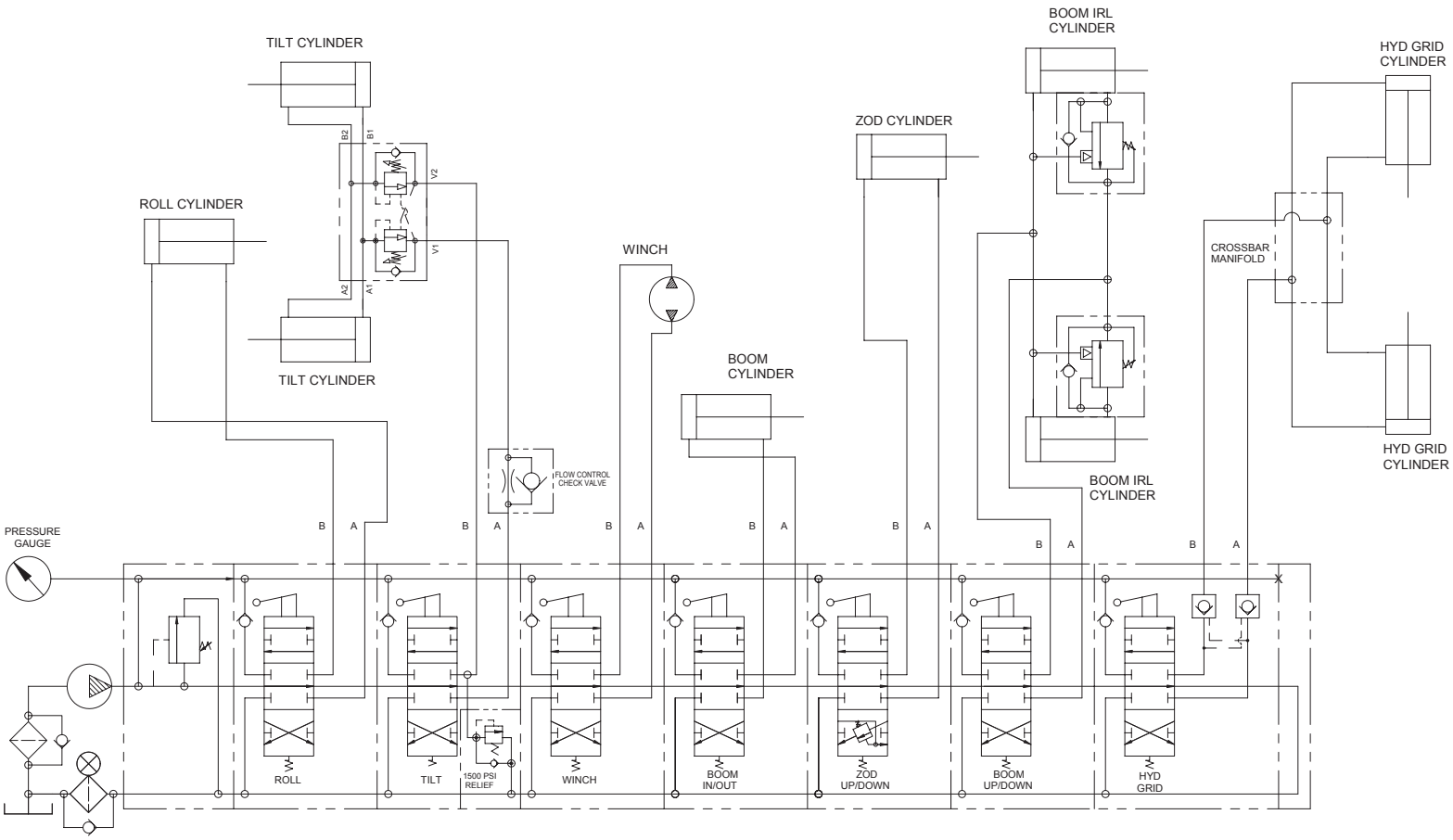

THIS PAGE INTENTIONALLY LEFT BLANK

ELECTRICAL SCHEMATIC

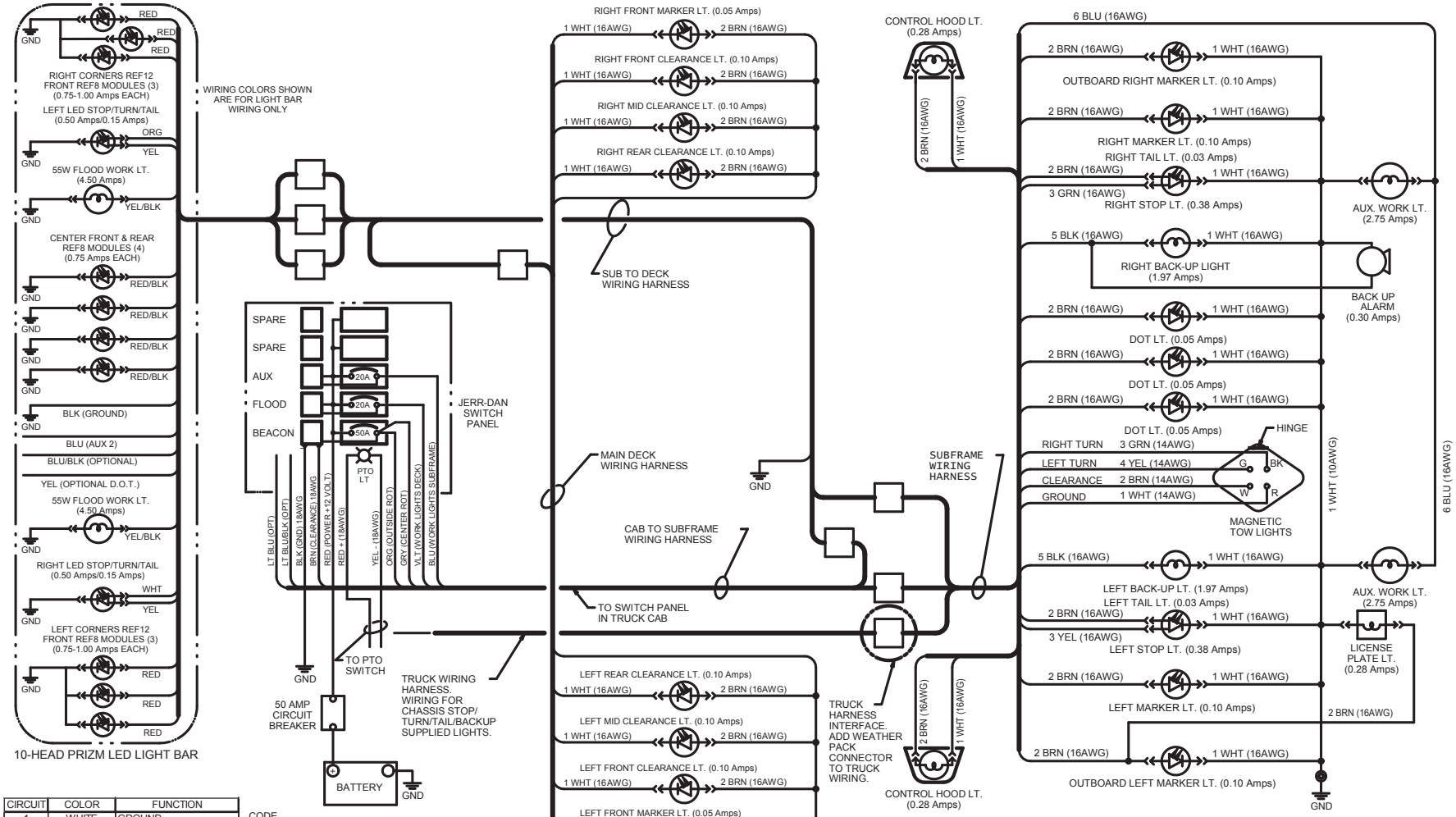

CIRCUIT	COLOR	FUNCTION
1	WHITE	GROUND
2	BROWN	CLEARANCE
3	GREEN	RH STOP/TURN
4	YELLOW	LH STOP/TURN
5	BLACK	BACK-UP
6	BLUE	WORK LIGHTS (SUBFR)
7	VIOLET	WORK LIGHTS (LT-BAR)
8	GRAY	BEACON (ROTATORS)
9	ORANGE	AUX 1 (FLASHER)
10	LT BLUE/BLACK	OPTION
11	LT BLUE	AUX 2

CODE
BLK = BLACK
BRN = BROWN
BLU = BLUE
GRN = GREEN
RED = RED
YEL = YELLOW
LT = LIGHT
ORG = ORANGE
VLT = VIOLET
WHT = WHITE

PART NUMBER INDEX

Part Number	Page
440287	42
641436	30
651822	43
691810	216, 218
741512	64
761015	100
3321701	42
4751300	188, 190, 192, 194
4761800	216, 218
4891800	76
5251215	92
5261000	100
7027336	236
7027338	236
7027341	236
70050012	304
70050031	290
70050065	296, 298
70050100	302
70050163	306
70050164	304
70050166	304
70050167	304
70050169	306
70050170	306
70050172	306
70050174	306
70050175	306
70050182	306
70050183	306
70050185	306
70050186	306
70050187	306
70050188	306
70050189	306
70050190	306
70050191	306
70050192	306
70050193	306
70050194	306
70050195	306
70050196	306
70050197	306
70050198	306
70050199	306
70050200	306
70050201	306
70050203	306
70050204	306
70050205	306
70050206	306
70050207	306
70050308	310, 312, 318
70050309	310, 312, 318
70050310	310, 312, 318
70050311	310
70050312	310, 312, 318, 320, 322
70050313	310, 318, 320, 322
70050314	310, 318, 320, 322
70050315	310, 312, 322
70050316	310, 312, 318, 320, 322
70050317	310
70050318	310, 312
70050319	310, 312, 314, 316, 322
70050320	312
70050321	312
70050322	312
70050323	314, 316
70050324	314, 316
70050325	316, 322
70050326	316
70050327	316
70050328	322
70050329	322
70050330	322
70050331	322
70050456	300, 302
70050457	300, 302
70050458	300, 302
70050459	300, 302
70050460	300, 302
70050461	300, 302
70050462	300, 302
70050463	300, 302
70050464	300, 302
70050465	300, 302
70050466	300, 302
70050467	322
70050468	322
70050525	300, 302
70050612	300, 302
70050613	300, 302
70050614	300, 302
70050615	300, 302
70050616	290, 300, 302
70050617	300, 302
70050618	300, 302
70050619	290, 300, 302
70050620	300, 302
70050621	300, 302
70050622	300, 302
70050625	300, 302
70050626	300, 302
70050627	300, 302
70050628	290, 294, 296, 300, 302
70050632	236
70050633	236
70050634	236
70050635	236
70050636	236
70050637	236
70050638	236
70050639	236
70050640	236
70050641	236
70050642	236
70050643	236
70050644	236
70050659	120
70050660	314
70050662	302
70050663	306
70050664	306
70050665	306
70050666	306
70050667	306
70050668	318, 320
70050669	318
70050670	318
70050671	318
70050672	318
70050673	318
70050674	318, 320
70050675	320
70050677	294, 296
70050678	292, 294, 296
70050679	292, 294, 296, 298
70050680	294, 296
70050681	294, 296
70050682	292, 294, 296, 298
70050685	296
70050686	296, 298
70050687	296, 298
70050688	296, 298
70050689	296, 298
70050690	290
70050691	290
70050692	290

PART NUMBER INDEX

Part Number	Page
70050694	292, 298
70050695	298
70050696	298
70050697	298
70050698	298
70050701	302
70050721	304
70050722	304
70050723	320
1001100949	186
1001126187	294, 296
1001126188	294, 296
1001126192	294, 296
1001127221	288
1001127297	216, 218
1001127985	43
1001128462	8
1001129165	32
1001129167	32
1001129169	32
1001129171	32
1001129173	32
1001129362	26
1001129364	26
1001129378	26
1001129379	26
1001130605	134
1001130702	304
1001131644	60
1001132350	30
1001132764	288
1001132766	288
1001132794	100
1001133195	32
1001133225	32
1001133740	338, 340
1001134510	60
1001134994	64
1001134995	64
1001135123	68
1001135157	68
1001135158	68
1001135177	64
1001135178	64
1001135272	124, 126, 128
1001135329	130
1001136989	260, 304
1001136993	260, 304
1001137904	206
1001137970	12, 14, 18, 20, 22, 42
1001138460	24
1001138522	42
1001138546	42
1001139199	42
1001139343	42
1001139503	30
1001141875	30
1001141889	30
1001141918	30
1001142430	120
1001142461	42
1001142543	42
1001142550	42
1001142553	42
1001142769	186
1001142962	42
1001143063	182
1001143064	182
1001143227	120
1001143257	120
1001143642	182
1001143690	182
1001143764	124, 126, 128, 130, 132
1001144448	42
1001144486	42
1001144491	42
1001144498	42
1001144499	42
1001144543	42
1001144986	182
1001145074	182
1001145075	182
1001145629	182
1001145636	42
1001145780	42
1001145934	42
1001145935	42
1001145963	42
1001145980	43
1001145986	126, 338
1001145987	43
1001146027	43
1001146028	42
1001146029	43
1001146552	120
1001146603	128, 340
1001147117	76
1001148180	120
1001148308	258
1001148385	120
1001148455	120
1001150704	42
1001153789	288
1001153944	196, 198, 200, 202, 204
1001153945	196, 198, 200, 202, 204
1001153946	196, 198, 200, 202, 204
1001153947	196, 198, 200, 202, 204
1001153950	196, 198, 200, 202, 204
1001153971	196, 198, 200, 202, 204
1001155971	98, 100
1001155972	98, 100
1001155975	118
1001156006	104
1001156081	100
1001156082	98
1001156245	50, 54
1001156246	50, 54
1001156247	50, 54
1001156248	50, 54
1001156249	50, 54
1001156252	288
1001158626	188, 190, 192, 194
1001158627	192
1001159336	186
1001160362	92
1001160363	92
1001160365	92
1001164169	92
1001168591	288
1001170187	124, 126, 128, 130, 132
1001170188	124, 126, 128, 130, 132
1001170189	124, 126, 128
1001170190	132
1001170191	130
1001173944	80
1001173945	80
1001173946	80
1001173947	80
2002000016	276
2178000037	276
2346000008	276
2870000021	262
2870000022	262
2970000019	48
2970000021	48
2970000050	52
2970000051	52
2970000052	52

Part Number	Page
2970000053	52
3002000008	282
3002000009	282
3017000103	60, 64, 68
3017000121	12, 14, 18, 22
3017000122	12, 14, 18, 22
3017000127	12, 14, 18, 22
3017000128	12, 14, 18, 22
3017000129	14, 18, 22
3017000130	12, 14, 18, 22
3017000135	20
3017000136	20
3017000137	20
3017000138	20
3017000139	20
3017000140	20
3020000029	202, 204
3020000030	202, 204
3020000072	196, 198, 200
3020000097	188, 190, 192, 194, 220, 226, 232
3020000110	190, 194
3020000111	206
3020000112	206
3020000113	188, 192
3020000114	196, 198
3020000115	206
3071000105	238, 252
3071000106	240
3071000107	242, 244
3071000109	246, 254, 256
3071000111	248
3071000117	250
3071000218	258
3097000129	12
3097000653	12
3097000654	12
3097000655	8
3097000656	8
3097000661	10
3097000662	10
3097000663	12
3097000664	12
3097000665	8
3097000666	8
3097000671	10
3097000672	10
3097000673	12
3097000674	12
3097000675	8
3097000676	8
3097000681	10
3097000682	10
3170000048	232, 234
3170000170	188
3170000208	226, 228, 230
3170000237	192
3170000275	220, 226, 232
3170000276	222, 224, 228, 230, 234
3170000428	190, 194
3170000445	188
3170000450	188
3170000456	188
3170000460	192
3170000504	192
3177000053	82
3177000054	82
3178000347	40
3178000433	38
3178000437	114
3178000555	282
3190000034	78
3190000037	78
3190000049	78
3190000050	78
3316000054	64
3320000114	188, 190, 192, 194, 212, 214, 216, 218, 220, 226, 232, 238
3320000115	188, 190, 192, 194, 240
3320000116	220, 222, 226, 228, 232, 234, 242
3320000117	216, 244
3320000118	192, 246
3320000120	64, 248
3320000122	60, 250
3320000134	190, 252
3320000135	254
3320000154	68
3320000157	194
3320000236	60, 64, 68, 258
3391000014	32
3391000017	28, 32
3391000018	32
3391000020	28
3391000021	28
3391000022	28
3484000034	196, 198, 200
3484000035	196, 198, 200
3484000050	202, 204
3484000051	202, 204
3484000074	206
3550001747	200
3550001912	268
3551000011	196, 198, 200
3551000036	196, 198, 200, 202, 204
3553000011	238, 242, 244, 250, 252, 258
3553000016	240, 246, 248, 254, 256
3556000019	266
3556000023	232, 234
3558000013	60, 64, 68
3558000014	60, 64, 68
3560000010	124, 126, 128, 130, 132
3577000120	286
3592000036	188
3592000051	206
3592000052	206
3592000054	190
3592000057	188
3691000064	216, 218, 220, 222, 224, 226, 228, 230
3691000069	188, 192
3691000073	232, 234
3691000092	190, 194
3691000097	222, 224, 228, 230, 234
3691000164	188, 190, 192, 194, 220, 226, 232
3691000165	212, 214, 216, 218
3691000166	60, 64, 68, 188, 190, 192, 194, 212, 214, 216, 218, 220, 222, 224, 226, 228, 230
3691000222	206
3691000229	206
3691000230	206
3691000273	60, 68
3698000001	238, 242, 244, 250, 252, 258
3698000006	240, 246, 248, 254, 256
3729000259	18, 22
3729000260	18, 22
3729000261	18, 22
3729000262	18, 22
3750000018	104
3763000118	238, 252
3763000119	240
3763000120	242, 244

Part Number	Page
3763000122	246, 254, 256
3763000123	248
3763000127	250
3811000053	116, 118
3811000054	116, 118
3811000055	116, 118
3811000057	116, 118
3849000021	212
3849000022	216, 218
3849000023	214
3849000041	214
3899000053	104
3899000075	104
3899000125	110
3899000126	110
3899000127	110
3899000130	104
3899000131	104
3899000132	104
3899000133	104
3899000172	104
3899000173	110
3905000012	60, 64, 68
3911000062	220, 222, 224
3913000093	196, 202
3913000096	196, 202
3913000098	198, 204
3913000099	198, 204
3935000111	324
3935000115	124, 326
3935000116	126, 328
3935000117	128, 330
3935000118	130, 332
3935000125	130
3935000150	132, 334
3935000166	130, 336
4017000739	188, 190, 192, 194

Part Number	Page
4017000777	104
4017001250	64
4017001271	60, 68
4017001403	112
4017001407	68
4017001499	52
4017001550	76
4017001566	80
4017001567	80
4017001587	76
4017001699	12, 14, 18, 22
4017001700	12, 14, 18, 22
4017001705	12, 14, 18, 22
4017001706	12, 14, 18, 22
4017001707	12, 14, 18, 22
4017001708	12, 14, 18, 22
4017001713	20
4017001714	20
4017001715	20
4017001716	20
4017001717	20
4017001718	20
4017001742	80
4017001743	80
4062000281	84
4062000318	34, 36
4120000008	232, 234
4178000202	280
4178000203	280
4178000283	84
4178000287	84
4178000290	104
4178000291	104
4178000330	104
4178000331	104
4178000338	104
4178000339	104

Part Number	Page
4178000367	60, 64, 68
4178000372	280
4178000402	260, 264
4178000403	262
4178000421	86, 88, 96
4178000423	264
4178000427	262
4178000437	260
4178000474	88
4178000475	88
4178000578	114
4178000599	110
4178000664	270, 272
4178000665	270, 272
4178000666	276
4178000673	48, 52
4178000674	52, 54
4178000682	88
4178000747	94
4178000805	60
4178000863	78
4178000873	20
4178000874	20
4209000145	48, 52
4209000146	50, 54
4209000147	48, 50, 52, 54
4209000328	48, 52
4209000337	60, 68
4209000358	60, 68
4211000001	124, 126, 132, 270, 272
4254000005	42, 202, 204
4259000001	202, 204
4259000002	202, 204
4263000464	132
4277000005	94
4314000043	78

Part Number	Page
4314000117	206
4314000118	206
4314000189	206
4314000200	78
4314000204	78
4330000001	232, 234
4330000002	220, 222, 224, 226, 228, 230, 234
4330000645	226, 228, 230
4330000646	226, 228, 230
4497000358	60, 64, 68
4553000008	238, 242, 244, 250, 252, 258
4553000016	240, 246, 248, 254, 256
4567110032	160, 162, 166
4567110034	162, 164, 166
4567110038	162, 166
4567110042	162, 166
4567112039	134
4567112042	172, 174
4567120015	134
4567120017	134
4567120024	170
4567120025	164, 166
4567122012	162, 166
4567122014	160, 162, 164, 166, 168, 170, 172
4567122027	134
4567122032	160, 162, 164, 166, 168, 170, 172
4567122038	134
4567122050	168, 170
4567123034	160, 162, 164, 166, 172
4567123042	134
4567123044	134
4567430118	134
4569432115	134

Part Number	Page
4569433115	134
4570000195	134
4570000198	134
4570000210	162, 166
4570000211	162, 166, 206
4570000212	206
4570000234	162, 166, 206
4577000002	160
4587000004	48, 50
4587000005	52, 54
4606000217	124, 126, 128, 130, 132
4619000013	162, 166, 206
4632000009	48, 50
4632000015	104
4632000048	104
4679000046	188, 190, 192, 194
4679000145	72
4679000151	60, 64, 68
4679000153	60, 64, 68
4679000154	72
4679000208	54
4679000211	188, 190, 192, 194
4679000221	60, 64, 68
4679000256	104, 110
4679000257	104, 110
4679000258	104, 110
4679000268	206
4679000322	104, 110
4686000295	26, 28
4686000296	26, 28
4686000301	26, 28
4686000302	26, 28
4691000141	270
4691000183	202, 204
4691000186	42, 202, 204
4691000198	206
4691000268	188, 190, 192, 194
4691000278	196, 198, 200, 202, 204
4691000296	188, 190, 192, 194
4691000354	202, 204
4691000357	202, 204
4691000373	270, 272
4691000374	270, 272
4691000421	40, 42
4691000429	60, 64, 68, 216, 220, 222, 226, 228, 232, 234
4691000430	216, 220, 222, 226, 228, 232, 234
4691000527	206
4691000568	268
4691000573	60, 64, 68
4698000007	238, 242, 244, 250, 252, 258
4698000015	240, 246, 248, 254, 256
4705000507	68
4705000607	32
4705000608	32
4706000233	74, 76
4706002361	104
4706003038	134
4706003210	280
4706003497	206
4706003501	206
4706003650	272
4706003766	38
4706003792	40
4706003844	100, 138, 140, 142, 144, 146, 150, 152, 154, 156, 158
4706004383	74
4706005020	110
4706005021	110
4706005022	110
4706005361	270, 272
4706005396	272
4706005551	24
4706005595	270
4706005958	60, 64, 68
4706006216	116, 118
4706006228	12, 14, 18, 20, 22
4706006234	110
4763000184	42, 202, 204
4763000204	258
4763000348	43, 48, 50, 52, 54
4796000003	28, 32
4796000009	110
4796000010	110
4796000011	110
4796000012	110
4796000037	26, 28, 120
4806000011	38
4806000014	38, 42
4809000003	84, 94
4811000841	112
4811000843	112
4811000868	112
4812000071	60, 64, 68
4812000072	60, 64, 68
4831000069	124, 126, 128, 130, 132
4831000109	206
4831000112	206
4892000008	26, 28
4892000009	26, 28
4912000130	38, 42
4912000345	40, 42
4912000394	38
4949000047	196, 198, 200, 202, 204, 206
4949000072	206
5525000752	284
5526000553	160
7002000285	342
7002000385	280
7002000386	280
7002000404	342
7002000410	104
7002000447	342
7002000448	342
7002000449	342
7002000451	342
7002000503	342
7002000521	342
7005000003	270, 272
7011000007	78
7082000010	48, 50, 52, 54
7082000016	188, 190, 192, 194, 220, 222, 224, 226, 228, 230, 232, 234, 238, 246, 248, 250, 252, 254, 256
7082000017	60, 64, 68, 188, 190, 192, 194, 212, 214, 216, 218, 220, 226, 232
7082000018	188, 190, 192, 194, 220, 226, 232, 238, 252
7082000026	206, 236
7082000027	206
7104100613	272
7105150850	84, 94
7105171050	82, 98, 100
7105171450	82
7105180153	32
7105181650	60, 64, 68, 88, 104
7105201250	82
7105201650	26, 28, 98, 100, 120
7105201850	60, 68, 120
7105202050	120
7105202250	60, 64, 68
7110140605	280
7111140850	280

Part Number	Page
7111150813	276
7111150864	74, 76
7111161050	124, 126, 128, 130, 132
7114080618	272
7114100810	270
7114100818	60, 64, 68
7114101018	186
7114101618	134
7114140465	110
7114140518	206
7114140528	78, 188, 190, 192, 194, 214, 216, 218, 220, 222, 224, 226, 228, 230, 232, 234
7114140529	78
7114150818	80
7114151218	60, 64, 68
7114161618	120
7114181218	268
7114181418	282
7115140650	42, 124, 126, 128, 130, 132, 272
7115140850	78
7115141450	280
7115141650	280
7115150423	206
7115150664	124, 126, 128, 130, 132
7115150850	48, 50, 52, 54, 104, 112, 124, 126, 128, 130, 132
7115150864	270, 272
7115151050	76, 82, 84, 138, 140, 142, 144, 146, 148, 150, 152, 154, 156, 158
7115151064	100, 138, 140, 142, 144, 146, 150, 152, 154, 156, 158, 280
7115151250	76, 206
7115151264	76
7115151650	134
7115151850	54, 134
7115160950	64, 116, 118, 188, 190, 192, 194, 212, 214, 216, 218, 220, 222, 224, 226, 228, 230, 232, 234
7115161050	60, 68, 342
7115162450	60, 64, 68
7115180606	282
7115180650	42, 60, 64, 68
7115180850	40, 42, 260
7115181005	94
7115181050	18, 22, 40, 134, 280, 342
7115181064	78, 124, 126, 128, 130, 132
7115181223	20
7115181250	34, 120
7115181450	30
7115181464	34, 36, 38, 276
7115181664	284
7115181864	34, 36
7115182050	266
7115182264	34, 36
7115182864	34, 36
7115183264	34, 36
7115183664	14, 34, 36
7115221650	60, 64, 68
7115222050	30
7118140418	188, 190, 192, 194
7118161026	60, 64, 68, 72, 206
7118181216	104
7120000005	12, 14, 18, 20, 22
7120000044	82
7178000044	76
7183000004	104
7209000011	38, 40, 42
7209000030	188, 190, 192, 194
7248000063	34, 36
7248000064	34, 42
7248000114	110
7248000115	206
7248000155	110
7253000002	42, 196, 198, 200, 202, 204, 206
7254000021	86
7262000010	284
7262000022	284
7262000040	284
7262000056	284
7274000002	134
7274000038	134
7274000039	134, 206
7274000040	100, 134, 138, 140, 142, 144, 146, 148, 150, 152, 154, 156, 158
7274000041	134, 138, 140, 142, 144, 146, 148, 150, 152, 154, 156, 158
7274000042	134, 138, 140, 142, 144, 146, 148, 150, 152, 154, 156
7274000046	60, 64, 68
7274000063	124, 126, 128, 130, 132
7274000066	134
7274000073	206
7274000076	82, 138, 140, 142, 144, 146, 148, 150, 152, 154, 156, 158
7274000080	134
7274000086	206
7274000105	100
7277000001	84
7280000007	114, 124, 126, 128, 130, 132
7280000011	264
7280000013	176, 178
7280000019	30
7291000010	188, 190, 192, 194, 214, 216, 218, 220, 222, 224, 226, 228, 230, 232, 234
7295000102	272
7295000103	272
7295000106	270
7295000108	270
7295000109	270
7295000111	270
7309000002	48, 50, 52, 54
7312000013	276
7312000015	276
7312000016	276
7312000017	278
7320000064	206, 236
7330000012	288
7330000036	288
7330000044	288
7330000045	288
7330000060	288
7330000139	288
7330000143	288
7330000157	256
7330000176	288
7330000242	288
7330000272	288
7330000274	288
7330000275	288
7330000330	288
7330000385	288
7330000391	288
7330000408	120
7330000417	196, 198, 200
7330000418	196, 198, 200

Part Number	Page
7330000419	196, 198, 200, 202, 204, 206, 232
7330000420	202, 204
7330000428	78
7330000432	202, 204
7330000478	288
7330000495	288
7330000548	132
7330000549	132
7330000599	288
7330000609	196, 198, 200, 202, 204, 206
7330000612	272
7330000628	288
7330000648	124, 126, 128
7330000649	124, 126, 128
7330000650	126, 128
7330000651	126, 128
7330000652	130
7330000653	130
7330000657	130
7330000658	130
7330000675	56, 288
7330000676	56, 288
7330000683	288
7330000684	288
7330000696	270
7330000700	288
7330000864	130
7330000865	130
7345001714	186
7345221902	176, 178
7345241902	176, 178
7346000039	186
7346000055	276
7346000078	276
7346000132	276
7346000157	276
7346000208	274
7395000265	334, 336
7413000013	32
7430000003	134
7430000014	104
7440030000	42, 196, 198, 200, 202, 204, 206, 232, 234
7443000013	134
7443000023	134
7443000030	168, 170
7443000111	278
7443000124	134
7443000129	160, 162, 164, 166, 172
7443000152	56
7443000154	56, 278
7443000155	56, 342
7443000156	56, 278
7443000158	134
7443000173	43
7443000244	322
7443000319	134
7443000364	56
7443000365	56
7443000366	56, 278
7443000371	56
7443000377	114
7443000427	274
7443000428	274
7443000431	322
7443000432	274
7443000440	274
7443000443	56
7443000446	134
7443040843	162, 166
7443060643	166
7445040431	42, 206
7445040443	134, 162, 166, 206
7445040445	162, 166, 206
7445040446	160, 162, 164, 166
7445040472	206
7445040643	274
7445040645	172, 174
7445040843	160, 162, 164, 166, 172, 174
7445041043	42
7445060643	134, 164, 170, 274
7445060645	134, 160, 162, 164, 166, 168, 170, 172
7445060648	160, 162, 164, 166, 168, 170, 172
7445060843	134, 164, 166, 170
7445060845	168, 170
7445080818	134
7445080843	134
7445080853	278
7445080872	42
7445081045	134
7445081643	134
7446382506	276, 278
7446502518	276, 278
7457000004	176, 178
7470000002	134
7470000023	124, 126, 128
7470000027	104
7493000002	78, 186
7493000003	264
7493000009	32, 78, 180, 182, 184
7493000010	78, 180
7493000023	78
7493000031	116, 118
7550000073	268
7550000074	268
7551000017	43, 48, 50, 52, 54
7551000018	124, 126, 128
7551000019	130, 132
7551000020	124, 126, 128, 130, 132
7551000021	124, 126, 128, 130, 132
7551000022	132
7552000074	176
7552000075	178
7552000098	176
7552000126	176, 178
7552000166	176, 178, 264
7552000177	176, 178
7552000204	178
7552000222	176, 264
7552000241	274
7552000297	114
7552000360	264
7552000391	270
7552000392	270
7552000393	270
7552000409	184
7552000426	270
7552000451	116, 118
7552000472	186
7555000015	110
7555000016	110
7560000007	124, 126, 128, 130, 132
7561000024	284
7565000014	56, 276, 278
7565000016	43, 56
7565000019	310, 312, 318
7570000016	84, 96
7570000017	84, 86, 96
7570000023	86
7570000025	88
7570000031	86
7570000035	96
7577000145	276

Part Number	Page
7577000194	176, 178
7577000208	284
7577000215	324, 326
7577000216	328, 338
7577000217	330, 340
7577000218	332, 336
7577000238	334
7577000242	284
7577000343	324, 326, 328, 330, 332, 334, 336, 338, 340
7577000376	284
7577000483	90
7577250024	238, 242, 244, 250, 252, 258
7577250206	240, 246, 248, 254, 256
7585000019	110
7590000049	312
7590000113	78
7590000132	180
7590000133	180
7590000148	180
7590000185	264
7590000223	264
7590000251	78
7590000273	114
7590000339	180
7590000340	78
7590000341	78
7590000342	32, 116, 118, 180, 182, 184
7590000343	78, 180, 182
7590000403	260, 306
7590000432	186
7592000005	110
7626000014	34
7638000004	74, 76
7638000013	74, 76
7640000002	56
7660082604	272
7660102604	60, 64, 68, 134, 186, 270
7660140000	280
7660140001	42
7660142600	280
7660142601	30, 78, 124, 126, 128, 130, 132, 188, 190, 192, 194, 214, 216, 218, 220, 222, 224, 226, 228, 230, 232, 234, 272
7660142604	110, 206
7660152601	48, 50, 52, 54, 60, 64, 68, 74, 76, 80, 82, 84, 100, 104, 112, 124, 126, 128, 130, 132, 134, 138, 140, 142, 144, 146, 148, 150, 152, 154, 156, 158, 206, 270, 272, 276, 280
7660160001	290
7660162601	60, 64, 68, 72, 116, 118, 120, 124, 126, 128, 130, 132, 188, 190, 192, 194, 212, 214, 216, 218, 220, 222, 224, 226, 228, 230, 232, 234, 282, 342
7660172331	82, 98, 100
7660180000	280
7660180001	42, 284
7660180201	290
7660180234	43, 48, 50, 52, 54
7660182301	104
7660182304	30
7660182333	32, 60, 64, 68, 88, 104
7660182601	12, 14, 18, 20, 22, 24, 34, 36, 38, 42, 60, 64, 68, 78, 94, 120, 124, 126, 128, 130, 132, 266, 268, 276, 282, 284, 342
7660182631	48, 50, 52, 54
7660200035	26, 28, 120
7660202347	60, 64, 68, 82, 98, 100, 120
7660222308	30, 60, 64, 68
7661000007	272
7661000011	248
7661000034	238, 240, 242, 244, 246, 250, 252, 254, 256, 258
7661000042	78
7661000047	114
7661000055	12, 14, 18, 20, 22
7661000057	124, 126, 128
7661000064	78
7661000065	82
7679000017	8, 10, 12, 14
7679000020	78
7690021210	206
7690021610	84, 94
7690051274	48, 50, 52, 54
7690101200	124, 126, 128, 130, 132
7690141600	206
7690144005	206
7690151601	84, 94
7691000001	216, 218, 220, 222, 224, 226, 228, 230, 234
7691000040	206
7691000042	206
7691000046	48, 50, 52, 54
7691000056	124, 126, 128, 130, 132
7691000064	124, 126, 128
7691000065	130
7691000066	132
7701000033	18, 22
7701000048	60, 64, 68
7701000049	32, 78
7701000051	60, 64, 68, 104
7701000055	78
7701000058	30
7701000062	196, 198, 200
7701000063	60, 64, 68
7706000001	318, 320, 322
7706000003	310
7706000004	312
7706000005	310, 314, 316, 318, 320, 322
7719000004	206
7719000005	206
7724000126	134
7732000002	206
7754000002	238, 242, 244, 250, 252, 258
7754000003	238, 242, 244, 250, 252, 258
7754000004	238, 242, 244, 250, 252, 258
7754000006	60, 64, 68, 188, 190, 192, 194, 206, 216, 220, 222, 226, 228, 232, 234
7754000009	270, 272
7754000022	38, 40, 42, 206, 268
7754000024	196, 198, 200, 202, 204, 206
7754000026	238, 242, 244, 250, 252, 258
7754000037	202, 204
7754000051	240, 246, 248, 254, 256

Part Number	Page
7754000053	240, 246, 248, 254, 256
7754000054	240, 246, 248, 254, 256
7754000087	206
7755222000	240, 248
7755222609	240, 248
7755224000	238, 242, 244, 246, 250, 252, 254, 256, 258
7755224609	238, 242, 244, 246, 250, 252, 254, 256, 258
7755330000	240, 246, 248, 254, 256
7755330008	250
7755330609	240, 246, 248, 254, 256
7755334000	238, 242, 244, 252, 258
7755334609	238, 242, 244, 250, 252, 258
7759000004	132, 288
7759000006	124, 126, 128, 130
7759000015	28, 32
7759000020	110
7759000022	26, 28
7785140400	206
7785140404	290, 300, 302
7785152420	82, 138, 140, 142, 144, 146, 148, 150, 152, 154, 156, 158
7786000006	202, 204
7786000007	14, 22, 64
7790100856	114, 176, 178
7790151253	86, 124, 126, 128, 130, 132, 206, 264
7790161253	84
7796000008	238, 242, 244, 252, 258
7796000024	238, 242, 244, 250, 252, 258
7796000045	240, 246, 248, 250, 254, 256
7796000046	240, 246, 248, 254, 256
7796000048	188, 190, 192, 194, 214, 216, 218, 220, 222, 224, 226, 228, 230, 232, 234
7796000063	238, 242, 244, 250, 252, 258
7796000067	240, 246, 248, 254, 256
7813000048	82
7843000004	42
7843000006	42, 202, 204
7843000016	202, 204
7843000027	48, 52
7843000035	38, 40
7843000043	206
7870000045	310, 318, 320, 322
7870000052	316
7870000053	262
7870000062	318, 320, 322
7870000063	262
7870000076	262
7870000083	262
7870000100	262
7870000106	262
7870000113	262
7870000115	114
7870000134	262
7870000137	262
7890000041	96
7894000004	56, 100, 116, 118, 134
7894000019	284
7894000020	284
7894000028	284
7894000031	278
7894000034	284
7894000042	30
7894000058	284
7894000059	284
7894000073	284
7904000007	134
7912000011	232, 234
7912000184	162, 166, 206
7912000233	86
7912000234	88
7912000235	86
7912000236	88
7912000237	162, 166, 206
7935000104	312
7935000120	56, 278
7935000170	324, 326, 328, 330, 332, 334, 336, 338, 340
7935000171	332, 334
7935000173	324, 326, 328, 330, 332, 334, 336, 338, 340
7935000174	324, 326, 328, 330, 332, 334, 336, 338, 340
7935000182	56
7935000227	326, 328, 330, 332, 334, 336, 338, 340
7935000229	56
7935000248	56
7935000305	160, 162, 164, 166, 168, 170, 172
7935000306	134
7935000369	324, 326, 328, 330, 332, 334, 336, 338, 340
7935000388	326, 328, 330, 332, 334, 336, 338, 340
7949000008	60, 64, 68
7949000011	124, 126, 128, 130, 132
7949000023	78
7949000030	48, 50, 52, 54
7949000034	38, 40, 42
7949000054	124, 126, 128, 130, 132
7949000072	60, 64, 68
7950100151	60, 64, 68, 176, 178
7950140000	78
7950140141	124, 126, 128, 130, 132, 272
7950140143	30, 42, 206
7950140151	270
7950140153	206
7950140161	280
7950150000	128, 206
7950150153	80
7950150161	48, 50, 52, 54, 76, 82, 84, 94, 100, 104, 112, 116, 118, 124, 126, 128, 130, 132, 134, 138, 140, 142, 144, 146, 148, 150, 152, 154, 156, 158, 206, 270, 272, 280, 342
7950160000	42
7950160153	120
7950160161	124, 126, 128, 130, 132, 282
7950160162	42
7950170000	42
7950170142	82, 98, 100
7950180000	42, 134, 260
7950180141	282
7950180143	30, 48, 50, 52, 54
7950180153	24, 32, 34, 36, 38, 40, 42, 60, 64, 68, 88, 104, 120, 280, 342
7950180161	20, 42, 48, 50, 52, 54, 124, 126, 128, 130, 132, 266
7950180252	260
7950180400	34
7950200000	202, 204
7950200152	26, 28, 120
7950200161	120
7950200242	60, 68, 98, 100, 120

Part Number	Page
7950220141	30, 124, 126, 128, 130, 132, 270, 272
7970000056	36, 290
7970000121	34, 292
7970000123	34, 294
7970000140	34, 296
7970000142	34, 298
7970000158	42, 300
7970000166	42, 302
8411080091	206
8411080102	12, 14, 18, 20, 22
8597650001	43, 56
8632000002	120
8632000012	124, 126, 128, 130, 132
9002000141	286
9002000142	286
9002000143	286
9002000144	286
9002000145	286
9002000146	286
9007960003	292, 294
9082960033	290
9120960021	290
9120960022	290
9120960023	290
9120960025	290, 300, 302
9120960026	290
9120960034	292, 294, 296, 298
9120960059	292, 294, 296, 298
9120960061	290, 292, 294, 296, 298
9120960075	294, 296
9120960081	300, 302
9183960002	296, 298, 300, 302
9209960022	290
9209960023	290, 300, 302
9295310026	272
9295310029	270
9295310030	270
9295310032	270
9295310033	270
9295310034	270
9295310036	270
9295310037	270
9295310038	270
9295310039	270
9295310042	270
9295310050	270
9309960009	290
9309960020	294, 296
9314960024	292, 294, 296, 298
9330740004	316
9330740009	288
9330740010	314
9330740011	314
9346760019	310, 318
9443760009	318, 320
9443760018	318, 320
9443960010	300, 302
9443960021	296
9472960042	290, 300
9472960043	290, 300, 302
9472960068	294, 296
9472960069	294, 296
9472960072	292, 298
9551960018	300
9552310007	304
9552310025	314
9552740006	316
9560960011	292, 294, 296, 298
9560960021	292, 294
9571960010	294, 296
9575960014	292, 294, 296, 298
9577000226	72
9577000227	72
9577030278	110
9577030279	110
9577030280	110
9577030303	110
9577930187	324, 326, 328, 330, 332, 334, 336, 338, 340
9587960009	290
9590310197	304
9590310202	304
9590310203	304
9590310205	304
9590310206	304
9611000001	286
9611000002	286
9626960027	300, 302
9691960001	290, 292, 294, 296, 300, 302
9691960035	292, 294
9701960014	290
9701960015	290, 292, 294, 296, 298
9701960016	290, 300, 302
9706960028	290
9706960029	290
9706960084	290
9740740002	316
9742960064	302
9754960039	290, 300, 302
9786960006	300, 302
9786960015	292, 294, 296, 298
9786960066	290
9796960047	290, 300, 302
9796960048	290
9796960049	290, 300, 302
9796960050	290
9796960051	290
9796960123	290
9796960139	294, 296
9796960176	294, 296
9796960177	294, 296
9806960009	292, 298
9806960017	290
9806960031	290
9812960005	290, 300, 302
9843930044	324, 326, 328, 330, 332, 334, 336, 338, 340
9843960027	290
9870310035	314
9890000002	286
9899000014	110
9899000015	110
9899000016	110
9899000020	110
9899000021	110
9899000022	110
9899000023	110
9899000024	110
9900000001	286
9900000002	286
9900000003	286
9900000004	286
9900000005	286
9900000006	286
9900000007	286
9900000008	286
9900000009	286
9900000010	286
9912960035	300, 302
9935740034	310, 312, 318
9935960023	290
9935960142	300
9949960017	290, 300, 302
9949960031	290, 300, 302
9949960054	294, 296
9970280019	290

Part Number	Page
9970300057	292, 294, 296, 298
9970316083	292, 298
9970330010	292, 294, 296, 298
9970342027	292, 294, 296, 298
9970400003	294, 296
9970400007	290
9970402002	292, 294, 296, 298
9970412003	292, 294, 296, 298
9970412045	292, 294, 296, 298
9970414045	292, 294, 296, 298
9970415177	298
9970418163	290, 300, 302
9970418177	292, 294, 296
9970418184	290
9970431008	292
9970442184	292, 294, 296, 298
9970442205	292, 294, 296, 298
9970450006	292, 294, 296, 298
9970456008	290, 292, 294, 296, 298
9970468002	290
9970468011	292, 294, 296, 298
9970472013	292, 294, 296, 298
9970486009	292, 294, 296, 298
9970486017	292, 294, 296, 298
9970494002	292, 294, 296, 298
9970494010	290
9970494053	292, 294, 296, 298
9970518014	292, 294, 296, 298
9970518015	292, 294, 296, 298
9970960034	294, 296
9970960035	294, 296
9970960036	294, 296
9970960037	294, 296
9970960038	294, 296
9970960051	294, 296
9970960052	294, 296
9970960057	290
9970960060	292, 294, 296, 298
9970960062	292, 298
9970960068	292, 294, 296, 298

THIS PAGE INTENTIONALLY LEFT BLANK

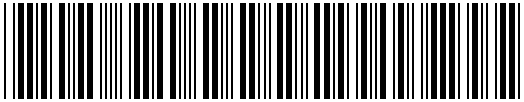

5376000089- 8